SURPRISE
ARIZONA

Rancho Gabriella

Amendment	Case Number	Approval Date	Approval Doc.	Page
Original PAD	PAD98-107	7/13/00		2
Lot Size Revision	PADA03-340	11/10/03		148
Land Use Change	PADA05-037	6/9/05		151
Patio Extension	PADA06-322	7/19/06		176

"RANCHO GABRIELA"

CITY OF SURPRISE
PLANNED AREA DEVELOPMENT PLAN

First Submittal: September 29, 1998
Second Submittal: December 15, 1998
Third Submittal: January 19, 1999
Fourth Submittal: March 30, 1999
Fifth Submittal: August 3, 1999
Sixth Submittal: February 8, 2000
Seventh Submittal: May 4, 2000
Eighth Submittal: June 23, 2000

STARDUST DEVELOPMENT, INC.
6730 N. SCOTTSDALE ROAD
SUITE 230
SCOTTSDALE, AZ 85253
TELEPHONE: (480) 607-5800
FAX: (480) 607-5801

CITY OF SURPRISE
PLANNING AND ZONING DEPARTMENT
APPROVED
Case No.: PAD98-107
P&Z Comm. Approval
City Council Approval 7/13/2000
B.O.A. Approval ORD #00-05
Stipulations: "I"

Consideration and action to approve **Resolution No. 00-31** – Development Agreement – **Rancho Gabriela – DENIED.**	Johnson made the motion to deny **Resolution No. 00-31;** A Resolution approving a **Development Agreement** for the **Rancho Gabriela** Development generally located at the Northwest Corner of Peoria and Bullard Roads and the Northwest Corner of Cactus and Bullard Roads. Montoya seconded the motion. **7 yes vote to deny**. Motion carried unanimously to deny.
Consideration and action to approve **Resolution No. 00-24 – General Plan Amendment – Rancho Gabriela – PASSED WITH STIPULATIONS.**	Johnson made the motion to approve **Resolution No. 00-24;** A Resolution approving the **General Plan Amendment GPA98-106** for a property to be known as **Rancho Gabriela** to change the existing general plan designation from "Typical neighborhood" with commercial corners at each arterial intersection, to "Typical Neighborhood", and "General Industrial" with two commercial corners. The property consists of 800 gross acres, one parcel bounded by Peoria Avenue on the South, Cactus Road on the North, Bullard Road on the east,. and Reems Road on the west, the other parcel bounded by Cactus Road on the South, Bullard Road on the east, and the north-south and east-west midsections of Section 17. Anderson seconded the motion. 7 yes vote. Motion carried unanimously.
Consideration and action to approve **Ordinance No. 00-05 – Planned Area Development – Rancho Gabriela – PASSED WITH STIPULATION "I".**	Johnson made the motion to approve **Ordinance No. 00-05;** An Ordinance approving the **Planned Area Development PAD98-107** for a property to be known as Rancho Gabriela consisting of changing the zoning from R1-43 (Single Family Residential) to P.A.D. with R1-5 (Single

Family Residential), R-2 (Multi Family Residential), Industrial and C-2 (Community Commercial). The property consisting of 800 gross acres, the 640 acre piece bounded by Peoria Avenue on the south, Cactus Road on the north, Bullard Road on the east, and Reems Road on the west, the 160 acre piece bounded by Cactus Road on the south, and Bullard Road on the east (Giora Ben-Horin; Benross Corporation – FINAL READING). Montoya seconded the motion. 7 yes vote. Motion carried unanimously.

Consideration and action to approve **Resolution No. 00-05 – Preliminary Plat – Rancho Gabriela – TABLED.**

Johnson made the motion to table **Resolution No. 00-05;** A Resolution approving the **Preliminary Plat PP99-167** for a property to be known as **Rancho Gabriela** consisting of 2,734 single family residential lots, two commercial parcels, and three multi-family parcels on 800 gross acres, the 640 acre piece bounded by Peoria Avenue on the south, Cactus Road on the north, Bullard Road on the east, and Reems Road on the west, the 160 acre piece bounded by Cactus Road on the south and Bullard Road on the east (Giora Ben-Horin; Benross Corporation). Smith seconded the motion to table. 7 yes vote. Motion carried to table.

Discussion, consideration and action to approve **Resolution No. 00-69 – General Plan Amendment – Sierra Montana – Tabled at the request of the applicant.**

DCM Berg gave a brief presentation regarding **Resolution No. 00-69**; A Resolution approving the **General Plan Amendment** for a property to be known as **Sierra Montana** consisting of changing the land use designation from Typical Neighborhood (6-7 du/acre) with commercial corners at each arterial intersection, to Typical Neighborhood (6-7 du/acre) with a commercial corner at the intersection of Greenway and Cotton Lane, and

RECEIVED
JUN 2 2 2000
CITY OF SURPRISE

"RANCHO GABRIELA"

CITY OF SURPRISE
PLANNED AREA DEVELOPMENT PLAN

First Submittal: September 29, 1998
Second Submittal: December 15, 1998
Third Submittal: January 19, 1999
Fourth Submittal: March 30, 1999
Fifth Submittal: August 3, 1999
Sixth Submittal: February 8, 2000
Seventh Submittal: May 4, 2000
Eighth Submittal: June 23, 2000

STARDUST DEVELOPMENT, INC.
6730 N. SCOTTSDALE ROAD
SUITE 230
SCOTTSDALE, AZ 85253
TELEPHONE: (480) 607-5800
FAX: (480) 607-5801

RANCHO GABRIELA
PLANNED AREA DEVELOPMENT PLAN
TABLE OF CONTENTS

Section	Description	Text Page
1	Project Introduction & Overview	1-3
2	Project Site Description & Existing Conditions	4-5
	Aerial Photograph	
	Vicinity Map	
3	Land Use and Zoning	6-9
	Exhibit A–"Development Exhibit"	
	Exhibit B–"Development Standards"	
	Exhibit C–"Land Use Table"	
4	Consistency with the Surprise Comprehensive Development Guide	10-13
5	Community Site Development Design	
	Overview	14-15
	Land Use Plan	15-16
	Open Space/Common Areas	16-18
	Entry Monumentation/Perimeter Walls	18
	Landscaping	19-20
	Circulation Pattern and Street Standards	20-21
	Signage	21
	Model Homes, Temporary Sales Offices and Construction Trailers	22
	Exhibit D– "Phase 1-Conceptual Site/Landscape Plan"	
	"Phase 2-Conceptual Site/Landscape Plan"	
	"Phase 3-Conceptual Site/Landscape Plan"	
	"Phase 4-Conceptual Site/Landscape Plan"	
	Exhibit E–"Typical Neighborhood Park"	
	Exhibit F–"Community Park"	
	Exhibit G–"Master Trail Plan"	
	Exhibit H–"Typical Open Space Trail Plan "	
	Exhibit I–"Open Space/Trail Section"	
	Exhibit J–"Street Cross Sections"	
	Exhibit K–"Typical Street Section/Plan View"	
	Exhibit L–"Typical Collector Street Section/Plan View"	
	Exhibit M–"Conceptual Signage & Wall Details"	
	Exhibit N–"Conceptual Master Wall Plan"	
	Exhibit O–"Perspective of Major Monumentation"	
	Exhibit P–"Conceptual Plant Palette"	
6	Community Site Development Design Guidelines	23-28

7 Architectural and Landscaping Design.....29-30

8 Architectural and Landscaping Design Guidelines 31-33

9 Engineering Documents and Exhibits 34
Exhibit Q–"Master Sewer Plan"
Exhibit R–"Master Water Plan"
Exhibit S–"Master Drainage Study" (included with first submittal)
Exhibit T–"Topographical Map"
Exhibit U–"Traffic Analysis" (included with first submittal)
Exhibit V–"Phasing Plan"

10 Zoning Ordinance

11 City of Surprise Title 17 Zoning Codes

12 Industrial PAD Permitted Use List

13 Legal Descriptions

14 Contact List

15 Appendix A–*"City of Surprise Residential Design Guideline Compliance"*

16 Appendix B–*"Dysart Unified School District Donation Agreement"*

RANCHO GABRIELA
PLANNED AREA DEVELOPMENT

Project Introduction and Overview

Rancho Gabriela is a proposed 798.8 acre Planned Area Development ("PAD") by Stardust Development, Inc. in the City of Surprise. Rancho Gabriela is bounded by Cactus Road and Sweetwater Avenue (mid-section line) to the north, Peoria Avenue to the south, Bullard Avenue to the east and Reems Road to the west.

Rancho Gabriela has been designed primarily as a residential community, with a diverse mix of home ownership opportunities on various lot sizes. The total number of proposed dwelling units is 2,329. The proposed land uses and the associated underlying zoning districts are: (i) Executive Housing, R1-18 PAD; (ii) Typical Neighborhood, R1-5 PAD; (iii) Cluster Housing, R-2 PAD; (iv) Commercial, C-2 PAD; and (v) Industrial PAD.

This mix of uses address a number of City of Surprise goals and policies. The northerly 635 acres are devoted to residential and commercial uses, which are in basic harmony with the General Plan. The residential consists of executive housing, traditional single family, and cluster housing. The commercial is to be neighborhood and community oriented, albeit in different locations than were originally identified in the General Plan. The southerly 164 acres of Rancho Gabriela are within the 65 Ldn Noise Contour Line, and the subject of vigorous debate over the most appropriate use of this area. In response to concerns expressed by the City of Surprise and other interested parties, and to clearly accommodate the mission of Luke Air Force Base, the entire portion of Rancho Gabriela located within the 65 Ldn Noise Contour Line (as specified in the MAG 1988 Westside Joint Land Use Study) has therefore been designated for industrial uses.

The design of the residential portion of Rancho Gabriela emphasizes a system of linked open spaces for access throughout the community by walking or bicycling without using city streets. The open space system will be owned and maintained by the Rancho Gabriela Community Association. A 16 acre site near the center of the community is reserved for a school. The internal collector streets have been designed to effectively route traffic through the project, providing convenient access to the arterials. Landscape tracts, also to be owned and maintained by the Rancho Gabriela Community Association, have been incorporated into the collector and arterial roadway designs to provide an attractive streetscape and pedestrian/bicycle trail system, as well as to provide a buffer for the residences. Open space and stormwater retention basins have been located adjacent to the collector and arterial roadways where possible to provide additional buffering. An additional collector street and open space buffer has been designed between the residential and industrial land uses.

Rancho Gabriela will be developed in accordance with design standards and guidelines presented in this Planned Area Development Plan. These standards, together with the project Covenants, Conditions, and Restrictions (the "CC&R's"), will ensure the quality of the Rancho Gabriela community.

Compliance with proposed *City of Surprise Residential Design Guidelines* is illustrated in Appendix A. The *Dysart Unified School District Donation Agreement*, together with correspondence from the District's attorney, is presented in Appendix B.

A companion General Plan Amendment application is being processed in conjunction with this Planned Area Development application to acknowledge the change in commercial sites, and accommodate the 164 acre industrial parcel located within the 1988 Westside Joint Land Use Study 65 Ldn Noise Contour Line, as previously described.

The technical submittals, including the Master Sewer Plan, Master Water Plan, Master Drainage Study and Traffic Study, were prepared in accordance with City of Surprise specifications and requirements.

Project Site Description

Rancho Gabriela is bounded by Cactus Road and Sweetwater Avenue (mid-section line) to the north, Peoria Avenue to the south, Bullard Avenue to the east and Reems Road to the west.

The site is situated seven (7) miles west of Loop 101 (Agua Fria) Freeway. The driving time to Loop 101 is approximately 15 minutes. The Outer Loop 303 (Estrella) Freeway is located approximately two (2) miles to the west. Interstate 10 is located approximately eight (8) miles to the south. The driving time to Central Phoenix is approximately 45 minutes.

The primary access to Rancho Gabriela from the developed portions of Surprise will be from Bell Road, then south on Reems Road, and east on Cactus Road. Bell Road provides the major east-west linkage for the City of Surprise. Bell Road, which currently has a minimum 110-foot right-of-way, is a fully improved six-lane roadway with a landscaped median, meandering sidewalks and landscaping on both sides. Bullard Road, Reems Road, Peoria Avenue and Cactus Road complete the paved access to Rancho Gabriela.

Existing Conditions

The site naturally slopes between 0.4% and 0.7% to the southeast. The current condition of the site is irrigated and farmed agricultural. An abandoned farmhouse and two mobile home trailers are located on site. Several irrigation wells, concrete irrigation ditches, and a water storage tank are located on site for farming purposes.

Cotton, flowers and various other crops have been cultivated on the site for many years.

An aerial photograph and vicinity map can be found on the following two pages.

Greenway Rd.
N
Waddell Rd.
Sarival Ave.
Reems Rd.
Bullard Ave.
Litchfield Rd.
Cactus Rd.
SUBJECT
Peoria Ave.
Olive Ave.
©LANDISCOR

VICINITY MAP

T3N R1W

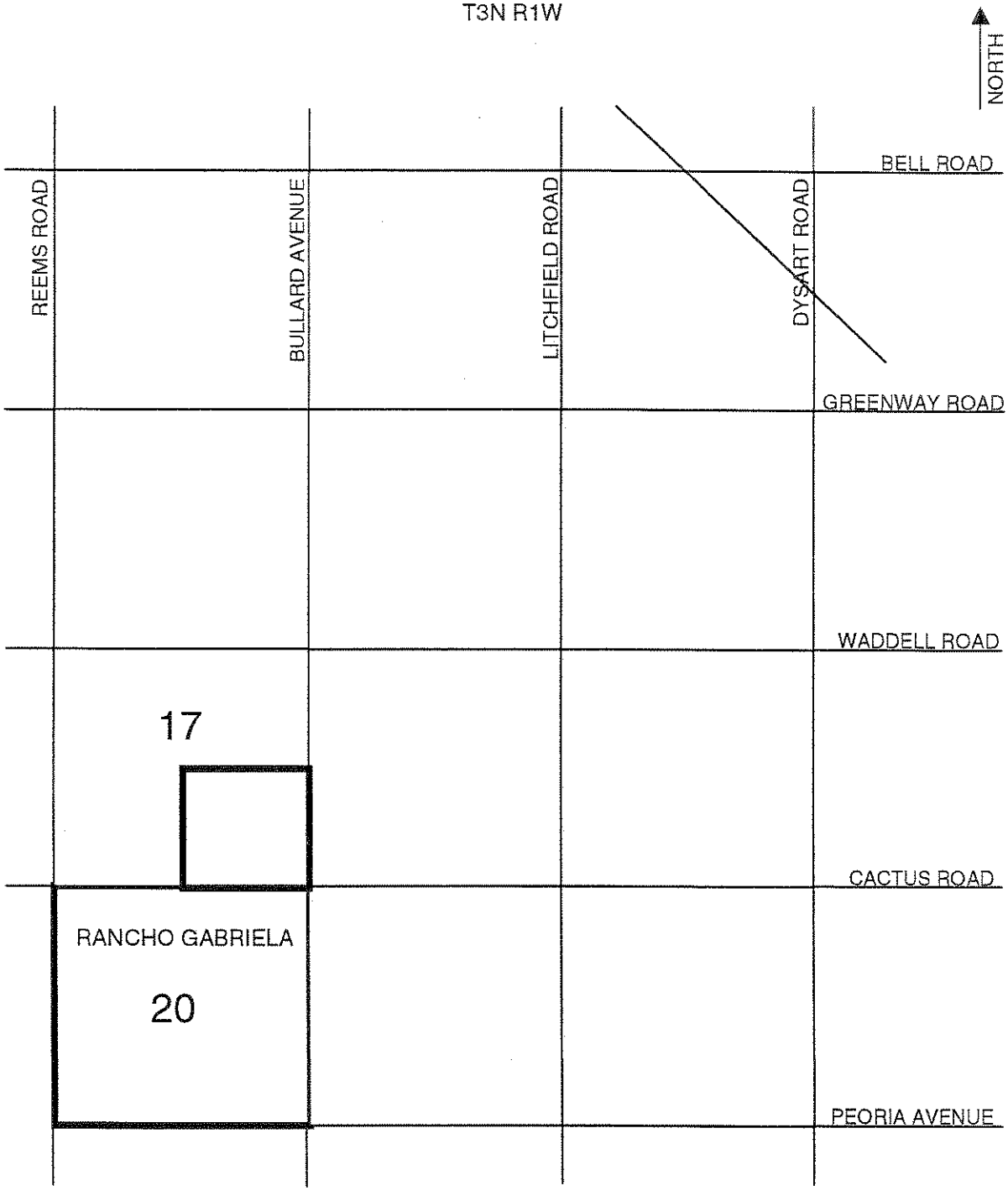

Land Use and Zoning

The residential portion of the plan for Rancho Gabriela is consistent with the Typical Neighborhood land use designation in the City of Surprise Development Guide Plan, which allows an overall density up to six (6) to seven (7) dwelling units per acre.

The Commercial land use designation indicates Convenience Commercial/Service (5-7 acres) at the northwest and southwest corners of Cactus Road and Bullard Avenue; Neighborhood Commercial/Service (10-12 acres) at the northwest corner of Peoria Avenue and Bullard Avenue and the southeast corner of Cactus Road and Reems Road; and Community Commercial/Service (12-15 acres) at the northeast corner of Peoria Avenue and Reems Road.

The northwest corner of Cactus Road and Bullard Avenue and the northeast corner of Peoria Avenue and Reems Road are proposed to be re-designated to Typical Neighborhood in a companion General Plan Amendment application. In addition, the current Neighborhood C-1 Commercial/Service designation at the southeast corner of Cactus Road and Reems Road is proposed to be re-designated as Community C-2 Commercial/Service. The current Convenience Commercial/Service designation at the southwest corner of Cactus Road and Bullard Avenue is proposed to be re-designated as Neighborhood Commercial/Service.

To accommodate the mission of Luke Air Force Base, and in response to concerns expressed by the City of Surprise and other interested parties, the entire portion of Rancho Gabriela located within the 65 Ldn Noise Contour Line as specified in the MAG 1988 Westside Joint Land Use Study is proposed to be re-

designated from Typical Neighborhood and Neighborhood Commercial to Industrial PAD.

The five proposed land uses and the associated underlying zoning districts are:

Land Use	Underlying Zoning District	Total Acres
Executive Housing	R1-18 PAD	117.4
Typical Neighborhood	R1-5 PAD	451.2
Cluster Housing	R-2 PAD	33.7
Commercial	C-2 PAD	32.5
Industrial	Industrial PAD	164.0

Rancho Gabriela has been designed primarily as a residential community, with a diverse mix of home ownership opportunities on various lot sizes. The total number of proposed dwelling units is 2,329.

The proposed Executive Housing, with an associated R1-18 underlying zoning district, provides a total of 177 lots on 117.4 acres, or 15% of the project. The proposed lot size is 100′ x 150′. The five Executive Housing parcels have been designed to accommodate optional "card gates" and private streets, to give the homebuilder the option of a private, gated community.

The proposed Typical Neighborhood designation, with an associated R1-5 underlying zoning district, provides a total of 1,915 lots on 451.2 acres, or a total of 56% of the project. The Typical Neighborhood portion of the project includes four lot sizes–48′ x 115′, 53′ x 115′, 58′ x 115′, and 63′ x 115′. These lot sizes provide an opportunity to construct varied housing products, and to create a diverse community appealing to a wide range of homebuyers.

The Rancho Gabriela residential community will also offer cluster homes, which is a relatively new concept in the Metropolitan Phoenix Area. Housing in the R-2 zoned areas is designed to "allow economical use of land while creating an attractive, functional and safe residential environment" (City of Surprise Title 17 Zoning Code 17.28.050, see Section 11) with densities up to 8 dwelling units per acre.

Two Commercial sites, with an associated C-2 underlying zoning district, are proposed at the southeast corner of Cactus and Reems and the southwest corner of Cactus Road and Bullard Road. Since the General Plan was adopted in the late 1980's, retailing has changed dramatically. Typically, a large tenant, i.e. grocery store, department store or similar type of tenant, must anchor retail sites. The development pattern of the Development Guide Land Use Plan provides commercial uses at all major intersections, which isn't necessarily appropriate. Many intersections in the City of Surprise are designated for substantial amounts of commercial land uses. The proposed amendment places the commercial land uses in more appropriate locations.

The 164 acres in the south are designated for Industrial under the PAD zoning district. A comprehensive, but restrictive, list of uses are included in this PAD, which allow flexibility for future use while maintaining compatibility with the neighboring residential community. The industrial portion is separated from the residential area by a 125' open space corridor/buffer.

The properties surrounding Rancho Gabriela are designated in the General Plan as Typical Neighborhood to the north, and Medium and High Density Residential to the east and west. All of the adjacent land surrounding Rancho Gabriela is currently in agricultural use. The Ashton Ranch Planned Area Development is located one half mile north.

The following section lists the specific goals and objectives of the Surprise Comprehensive Development Guide that are met by the Rancho Gabriela PAD.

RANCHO GABRIELA
PLANNED AREA DEVELOPMENT

Development Standards

LOT SIZE	R1-5 PAD 48' X 115'	R1-5 PAD 53' X 115'	R1-5 PAD 58' X 115'	R1-5 PAD 63' X 115'	R1-18 PAD 100' X 150'
RESIDENTIAL					
Minimum Lot Area [1]	5,520 sf	6,095 sf	6,670 sf	7,245 sf	15,000 sf
Minimum Lot Width--Interior Lot [2]	48'	53'	58'	63'	100'
Minimum Lot Width--Corner Lot [2]	58'	63'	68'	73'	110'
Maximum Building Height	30'	30'	30'	30'	35'
Front Yard Setback	18', 21', 24'	18', 21', 24'	18', 21', 24'	18', 21', 24'	25'
Front Yard Setback--Stagger	3' Min.	3' Min.	3' Min.	3' Min.	n/a
Front Yard Setback--Front of House/Garage Recessed	12' Min.	12' Min.	12' Min.	12' Min.	25' Min.
Front Yard Setback--Side Entry Garages	12' Min.	12' Min.	12' Min.	12' Min.	25' Min.
Property Line to Vertical Garage Door	18' Min.	18' Min.	18' Min.	18' Min.	25' Min.
Driveway Length	20' Min.	20' Min.	20' Min.	20' Min.	25' Min.
One-Story					
Side Yard Setback--Interior Lot--Minimum	5'	5'	5'	5'	10'
Side Yard Setback--Interior Lot--Aggregate	13'	13'	13'	13'	20'
Side Yard Setback--Corner Lot--Minimum	5'	5'	5'	5'	10'
Side Yard Setback--Corner Lot--Street Side	18'	18'	18'	18'	20'
Side Yard Setback--Corner Lot--Aggregate	23'	23'	23'	23'	30'
Two-Story					
Side Yard Setback--Interior Lot--Minimum	7'	7'	7'	7'	10'
Side Yard Setback--Interior Lot--Aggregate	15'	15'	15'	15'	20'
Side Yard Setback--Corner Lot--Minimum	7'	7'	7'	7'	10'
Side Yard Setback--Corner Lot--Street Side	18'	18'	18'	18'	20'
Side Yard Setback--Corner Lot--Aggregate	25'	25'	25'	25'	30'
Rear Yard Setback[4]	15'	15'	15'	15'	25'
Minimum Distance Between Buildings--One-Story	10'	10'	10'	10'	20'
Minimum Distance Between Buildings--Two-Story	14'	14'	14'	14'	20'
Minimum Distance Between Buildings--One/Two-Story	12'	12'	12'	12'	20'
Maximum Lot Coverage--Primary Structure	50%	50%	50%	50%	50%
Maximum Lot Coverage--Primary Structure with Patios/Shade Structures	55%	55%	55%	55%	55%
Maximum House Width--One-Story	35'	40'	45'	50'	80'
Maximum House Width--Two-Story	33'	38'	43'	48'	80'
Landscape Tracts--Collector Street	10'	10'	10'	10'	10'
Landscape Tracts--Arterial Street	20'	20'	20'	20'	20'
Landscape Tracts--Adjacent to Lots Siding Collector	25'	25'	25'	25'	25'

NOTES:

1. Not more than 10% of the lots within a Lot Category may be smaller than the Minimum Lot Size for that Lot Category.
2. Minimum lot widths will be measured at the front setback line.
3. In certain cases, flag lots may be designed. Flag lots shall be addressed during the preliminary plat process.
4. For Local, Collector and Arterial Streets (same due to landscape tracts). Patio covers may encroach up to 10' from the rear property line.
5. Non-structural architectural features such as fireplaces, bay windows and pop-outs may encroach not more than 2' into sideyard setback.
6. Local to Collector and Local to Local shall have a minimum of 125' offset.

Development Standards

	C-2 PAD
COMMERCIAL	
Minimum Lot Width--Corner Lot	150'
Maximum Building Height	35'
Front Building Setback	35'
Rear Building Setback	15'
Interior Side Building Setback	15'
Corner Side Building Setback	25'
Residential Zone Boundary	45'
Front Parking Lot Setback	4'
Rear Parking Lot Setback	3'
Interior Side Parking Lot Setback	3'
Corner Side Parking Lot Setback	4'
Residential Zone Boundary--Parking Lot	3'

NOTES:

1. The C-2 information in this chart is provided for **information only**. Refer to City of Surprise Title 17 Zoning Code for actual C-2 ordinance requirements.

Development Standards

	Industrial PAD
INDUSTRIAL	
Minimum Lot Width	100'
Maximum Building Height	35'
Front Building Setback	35'
Rear Building Setback	15'
Interior Side Building Setback	15'
Corner Side Building Setback	30'
Residential Zone Boundary	75'
Front Parking Lot Setback	10'
Rear Parking Lot Setback	3'
Interior Side Parking Lot Setback	3'
Corner Side Parking Lot Setback	10'
Residential Zone Boundary--Parking Lot	3'

NOTES:

1. The Industrial information in this chart is provided for **information only**. Refer to City of Surprise Title 17 Zoning Code for actual Industrial ordinance requirements.
2. Where outside storage is placed adjacent to the open space buffer in the residential portion of the site, additional screening and appropriate buffering is required.

RANCHO GABRIELA
PLANNED AREA DEVELOPMENT

Land Use Table (in acres)	Phase One	Phase Two	Phase Three	Phase Four	Reserved School Site	Project Total	Project Percentage
Executive Housing (R1-18 PAD)	-	20.0	-	97.4	-	117.4	14.7%
Typical Neighborhood (R1-5 PAD)	159.2	92.3	98.5	85.1	16.1	451.2	56.5%
Cluster Housing (R-2 PAD)	-	16.6	17.1	-	-	33.7	4.2%
Commerical (C-2 PAD)	-	11.8	20.7	-	-	32.5	4.1%
Industrial (PAD)	-	-	-	-	-	164.0	20.5%
Total Acreage	159.2	140.7	136.3	182.5	16.1	798.8	100%

Note: Open space within the R1-18 PAD and R1-5 PAD, excluding the school site, is 11.9%.
Open space within the R1-18 PAD and R1-5 PAD including the school site is 14.8%.

602.3

Lot Percentage & Lot Count Table	R1-5 PAD 48' X 115'	R1-5 PAD 53' X 115'	R1-5 PAD 58' X 115'	R1-5 PAD 63' X 115'	R1-18 PAD 100' X 150'	R-2 PAD Cluster	Total
R1-18 PAD, R1-5 PAD & R-2 PAD							
Number of Lots	702	700	302	211	177	237	2329
Percentage	30%	30%	13%	9%	8%	10%	100%

Consistency with the Surprise Comprehensive Development Guide

As previously noted, the site is principally designated Typical Neighborhood on the City of Surprise Development Guide Plan. The proposed Rancho Gabriela Planned Area Development consists of single family residential, commercial, industrial, and open space areas, and is consistent with the Goals and Objectives of the Surprise Comprehensive Development Guide and the recently expressed goals of the Surprise City Council. (Specific Policies are addressed in the appropriate parts of this plan.)

The specific Goals and Objectives that are complemented or achieved by Rancho Gabriela include:

- The proposed land use and density is in compliance with the City of Surprise Development Guide Plan and the expressed goals of the Surprise City Council. The proposed underlying zoning districts are R1-18 PAD, R1-5 PAD, R-2 PAD, C-2 PAD and Industrial PAD (see *Exhibit C–"Land Use Table"*).

- In accordance with the goals of the Surprise City Council and other interested parties, the Industrial PAD designation on the 164 acres within the 65 Ldn Noise Contour Line as specified in the MAG 1988 Westside Joint Land Use Study accommodates the mission of Luke Air Force Base.

- In accordance with Goal A and Objective A-1 of the Guide, the project will provide urban growth in a planned, orderly manner and create a high

quality development. Rancho Gabriela will be developed in four phases (see *Exhibit V–"Phasing Plan"*).

- In accordance with Goal B and Objectives B-1, B-2 and B-3, Rancho Gabriela will create a stable identifiable residential neighborhood, in compliance with the designated land use, and, with the General Plan Amendment, will minimize land use conflicts.

- In accordance with Goal C and Objectives C-1 and C-2, the project will provide adequate housing for residents of Surprise at all income levels, will offer a range of housing products and sizes, and will be constructed in compliance with Building Codes and Zoning and Subdivision Regulations to ensure quality housing (see Sections 7 and 8).

- In accordance with Goal D and Objectives D-1, D-2 and D-3, the project expands residential development, and provides a wide selection of housing products on seven lot sizes and proposed cluster housing, and provides a planned residential neighborhood in the newly developing areas of Surprise.

- In accordance with Goal E and Objectives E-1 and E-2, the project expands the existing commercial, service and industrial facilities, creates new employment activities, and creates compatible commercial and industrial districts that contain a full complement of supportive facilities.

- In accordance with Goal F and Objective F-1, the project will provide a pedestrian and bicycle circulation system (trail system) linking the residential and open space areas. The trail system will consist of an 8′ meandering sidewalk throughout the open space areas (see *Exhibit G–*

"Master Trail Plan").

- In accordance with Goal G and Objective G-1, the project will set design quality standards to ensure consistency (see Sections 6 and 8).

- In accordance with Goal I and Objective I-1, the project will provide a municipal street system providing the necessary circulation and protecting the integrity of the residential community. The proposed sixty (60) foot right-of-way collector streets will discourage cut-through traffic and excessively high traffic speeds (see *Exhibit U –"Traffic Analysis"*).

- In accordance with Goal K and Objective K-1, the project will provide a pedestrian and bicycle circulation system throughout the community (see *Exhibit G – "Master Trail Plan"*).

- In accordance with Goal L and Objective L-1, the project will extend the necessary public utilities in an orderly planned manner to support new development (see *Exhibit Q– "Master Sewer Plan" & Exhibit R–"Master Water Plan"*).

The Rancho Gabriela Conceptual Land Use Plan complements many of the Surprise Development Guide policies. These policies include:

- Policy A-1a, A-1b and A-1c, addressing the extension and installation of public utilities and facilities;

- Policy B-1a, B-1b and B-1d, addressing the neighborhood design standards to encourage quality development;

- Policy C-1/2/3a, addressing the response to market demands, and the development of all types of housing through expeditious and proper application of land use planning, zoning regulations, site design review and building inspections;

- Policy C-1/2/3b, addressing the utilization of resources to help provide adequate, safe housing for persons of low- and moderate- income;

- Policy D-1/2/3b, addressing the encouragement of quality housing development, by designating large residential areas buffered from adjacent uses;

- Policy D-1/2/3c, suggesting that the City market itself to the Phoenix Metropolitan Area and regional housing developers as an opportune area in which to develop with its interest in quality planning and development; willingness to work with the developer to insure an expeditious review, approval and development process; aggressive posture relative to expanding its employment base and other economic development activities supportive of residential development;

- Policy F-2a, requiring the use of public sewer systems;

- Policy G-1a, requiring design standards for new development; and

- Policy L-1/2/3a, requiring developers to install all public utilities and facilities to State and municipal standards.

Community Site Development Design

Overview

Stardust Development, Inc. has designed a modern residential community with a Traditional theme (*Exhibit D–"Conceptual Site/Landscape Plan"*).

The community is centered around an open space system that links the individual neighborhoods. The curvilinear collector street pattern, with landscape tracts and meandering sidewalks, provides direct vehicular, bicycle and pedestrian access to the school and open space areas along with a connecting trail system. Active and passive amenities will be provided in the open space areas. Mid- and low-level lighting will be provided along the trail system and in the children's play areas.

Major and minor entry monumentation, together with open space areas adjacent to the arterial streets, identify the project and establish its character. The entry features will be constructed of stucco, wrought iron and stone veneer. The perimeter walls will be constructed of masonry block, accented with a split-face pattern and stone veneer columns *(Exhibit M–"Conceptual Signage and Wall Details")*.

Arterial streets will be constructed to City of Surprise standards. The curvilinear collector street pattern has been designed to safely convey traffic while limiting cut through traffic and high travel speeds. Meandering and detached sidewalks and landscape tracts encourage bicycle and pedestrian traffic. The local street patterns will provide diversity and cul-de-sacs with oversized lots.

Project signage will be controlled, and constructed in accordance with the accompanying exhibits and Master Sign Program.

The Rancho Gabriela Community Association will be responsible for the maintenance of the amenities, open space areas and landscape tracts. In conjunction with the Rancho Gabriela Community Association, a Residential Design Review Committee ("RDRC') will be formed to enforce the community design standards.

Land Use Plan

Rancho Gabriela will include the following land uses and the associated underlying zoning districts: (i) Executive Housing, R1-18 PAD; (ii) Typical Neighborhood, R1-5 PAD; (iii) Cluster Housing, R-2 PAD; (iv) Commercial, C-2 PAD; and (v) Industrial PAD. *Exhibit A–"Development Exhibit"* presents the layout of the project.

Rancho Gabriela has been designed with various lot sizes. The Executive Housing lots are 100′ x 150′. The Typical Neighborhood land use is comprised of four lot sizes—48' x 115', 53' x 115', 58′ x 115′, and 63' x 115'.

In the R1-5 zoning district, Rancho Gabriela will comply with the setback criteria presented in the proposed City of Surprise Residential Design Guidelines. Maximum lot coverage for the primary structure will be 50%. Maximum lot coverage for the primary structure with patios and shade structures will be 55%. Maximum building height will remain 30′ according to the City of Surprise Title 17 Zoning Code 17.28.040F2 (see Section 11). Encroachments into front and side yard setbacks will be regulated by the City of Surprise Title 17 Zoning Code 17.28.010G (see Section 11). Refer to *Exhibit B–"Development Standards"* and *Appendix A–"Design Guideline Comparison"*.

Detached cluster homes are proposed in the R-2 zoned areas, which will comply with the new City of Surprise Cluster Home Guidelines presently being drafted by the City of Surprise. Because of the nature of cluster housing, it is difficult to design setback criteria at such an early stage. We are proposing that development standard setbacks be established during the preliminary plat process.

In the R-2 zoned areas, the streetscape is varied because the homes are clustered around common access areas or courtyards. This clustering allows single family "detached" residences (with private back yards that will accommodate a small swimming pool) to be constructed at densities between 7 and 8 dwelling units per acre. Few of these homes have direct access to the streets, which drastically reduces the number of garages that are in view throughout the project. This creates a unique streetscape and diverse community.

Open Space/Common Areas

As depicted on *Exhibit A–"Development Exhibit"*, Rancho Gabriela provides a total of 67.8 acres of open space, or 11.9% open space within the R1-18 PAD and R1-5 PAD zoning districts, excluding the school site. If the school site is included, the total open space increases to 14.8%. (*Exhibit C–"Land Use Table"*). The Rancho Gabriela Community Association will maintain the open space and common areas. Landscaping will follow the requirements for single family developments as outlined in the City of Surprise Title 17 Zoning Code 17.32.030 (see Section 11).

Meandering 6-foot wide sidewalks along the arterial right-of-ways and straight, detached 6-foot wide sidewalks along the collector right-of-ways will provide pedestrian and bicycle access to the open space areas and school site.

Interior pedestrian and bicycle connectivity will be provided by 8-foot wide sidewalks in the open space areas.

Examples of active and passive amenities that will be available in the Rancho Gabriela open space areas include:

- Full and Half-Basketball Courts;
- Soccer Field with Goals;
- Sand Volleyball Court;
- Large Turf Recreational Areas;
- Pre-Teen Play Structures;
- Ramadas;
- Swing Units--Four Swings;
- Spring Animals;
- BBQ Grills;
- Picnic Tables;
- Benches;
- Bike Rack Units;
- Trash Receptacles;
- Drinking Fountains.

The amenities listed above provide activities for young children as well as older children and adults. Amenities will be strategically located to provide convenient access by all residents. (See *Exhibit E–"Typical Neighborhood Park", Exhibit F–"Community Park", Exhibit G–"Master Trail Plan", Exhibit H–"Typical Open Space Trail Plan", and Exhibit I–"Open Space/Trail Section").*

The proposed open space and common areas comply with the following Surprise Development Guide policies:

- Policy H-1d, stating that the City shall work with private developers to insure that adequate open space and recreational facilities are constructed in conjunction with all new development.

Entry Monumentation/Perimeter Walls

Major entry monumentation will be constructed at the intersections of Cactus Road and Bullard Avenue, and Reems Road and the ½ mile collector. Minor entry monumentation will be constructed at the intersections of the ½ mile collector and Cactus Road, the ½ mile collector and Bullard Avenue, and Reems Road and Peoria Avenue. *(Exhibit N–"Conceptual Master Wall Plan")*.

Perimeter theme walls adjacent to the residential zoning districts will be constructed along the arterial road frontage (Cactus Road, Bullard Avenue, Reems Road, and a small section of Peoria Avenue). The perimeter theme wall will be constructed to a 7-foot height, and will include stone veneer columns at approximate 250′ intervals to relieve the linear character of the arterial walls. Interior collector theme walls will be constructed along the collector streets. View walls will be constructed in specified locations adjacent to the open space areas, with exact locations to be determined at the time the landscaping plans are prepared and submitted. *(Exhibit M–"Conceptual Signage & Wall Details", and Exhibit N–"Conceptual Master Wall Plan")*. The proposed entry monumentation and perimeter walls comply with the general Surprise Development Guide policies of creating high quality residential development, specified design standards, and identifiable residential neighborhoods.

Landscaping

Xeriscape plant materials and decomposed granite will be used for the arterial and collector streetscapes (*Exhibit K–"Typical Street Section/Plan View" and Exhibit L–"Typical Collector Street Section/Plan View"*). The arterial and collector streets and the major entries will be landscaped with drought tolerant trees and various plant materials. To maintain continuity throughout the community, a recommended plant palette will be provided for the residents (*Exhibit P–"Conceptual Plant Palette"*). A specific decomposed granite color and size for the streetscape landscaping will also specified (residents will be given a limited choice of decomposed granite colors and sizes for private front yards). Rocks, boulders and other compatible materials may be used to supplement the landscaping design and enhance the traditional character of the development and xeriscape theme.

For recreation purposes and a lush appearance, the open space will have large turf areas. Landscaped common areas will be provided with a low water use irrigation system, and will be properly maintained. All site development landscaping plans are subject to the approval of the Community Development Director.

Plants and materials may be added to the recommended landscape palette through an administrative approval by the City's Community Development Director. Significant changes in the recommended landscaping palette may be approved by the City when deemed necessary through amendments to the PAD approval (City of Surprise Title 17 Zoning Code Sections 17.36.060G1 and 2, see Section 11).

The proposed site development landscaping complies with the following Surprise Development Guide policies:

- Policy F-2c, stating that the City shall encourage water conservation in all new development through the utilization of drought tolerant plant materials, and efficient irrigation systems (drip/low flow);

- Policy G-1a, requiring the establishment of environmental design standards for new development in Surprise, including Residential Development.

Circulation Pattern and Street Standards

The circulation pattern has been designed to safely convey traffic but limit cut through traffic and high travel speeds. All streets will be constructed to City of Surprise standards. The curvilinear collector street pattern has been designed with straight, detached sidewalks and landscape tracts to encourage bicycle and pedestrian traffic.

The proposed arterial half street right-of-ways for Cactus Road, Bullard Avenue, Peoria Avenue (Minor Arterials) and Reems Road (Major Arterial) shall be 55', 55', 55', and 65' respectively. Six-foot wide meandering sidewalks will be constructed in the arterial right-of-way and landscape tracts will be provided adjacent to the right-of-way.

The proposed collector street right-of-ways shall be 60-feet wide, with 10-foot wide landscape tracts on each side. Six-foot wide straight, detached sidewalks will be constructed adjacent to the collector streets.

The local street right-of-ways shall be 50-feet wide, with attached 4-foot wide sidewalks on both sides.

All street sections are shown on *Exhibit J–"Street Cross Sections."* The Traffic Analysis prepared by Kimley-Horn & Associates *(Exhibit U–"Traffic Analysis")* supports the proposed street pattern and cross sections.

The Circulation Pattern and Street Standards complement many of the Surprise Development Guide policies. These policies include:

- Policy I-1c, stating that the City shall work with private developers to insure the new street system segments are constructed on an orderly basis in conjunction with new development, and in accordance with the Development Guide and Circulation Plan elements of the Comprehensive Development Guide;

- Policy I-1d, which encourages creative neighborhood street design in every new subdivision that will service localized traffic and foster neighborhood integrity, while discouraging through traffic.

Signage

A Master Sign Plan for Rancho Gabriela will be submitted separately for a Conditional Use Permit approval. All signage will be appropriate to the character of the development, provide adequate identification and information, provide a good visual environment, and promote safe traffic.

The conceptual signage elevations are shown on *Exhibit M–"Conceptual Signage & Wall Details"* and the proposed locations are shown on *Exhibit N–"Master Wall Plan."*

Model Homes, Temporary Sales Offices and Construction Trailers

Upon a request from the developer to the City of Surprise, and once approved by the city, the model homes, temporary sales offices and construction trailers may be constructed and placed throughout the community. Model homes, temporary sales offices and temporary construction trailers shall be submitted for administrative review and approval by the City Manager and the Community Development Director.

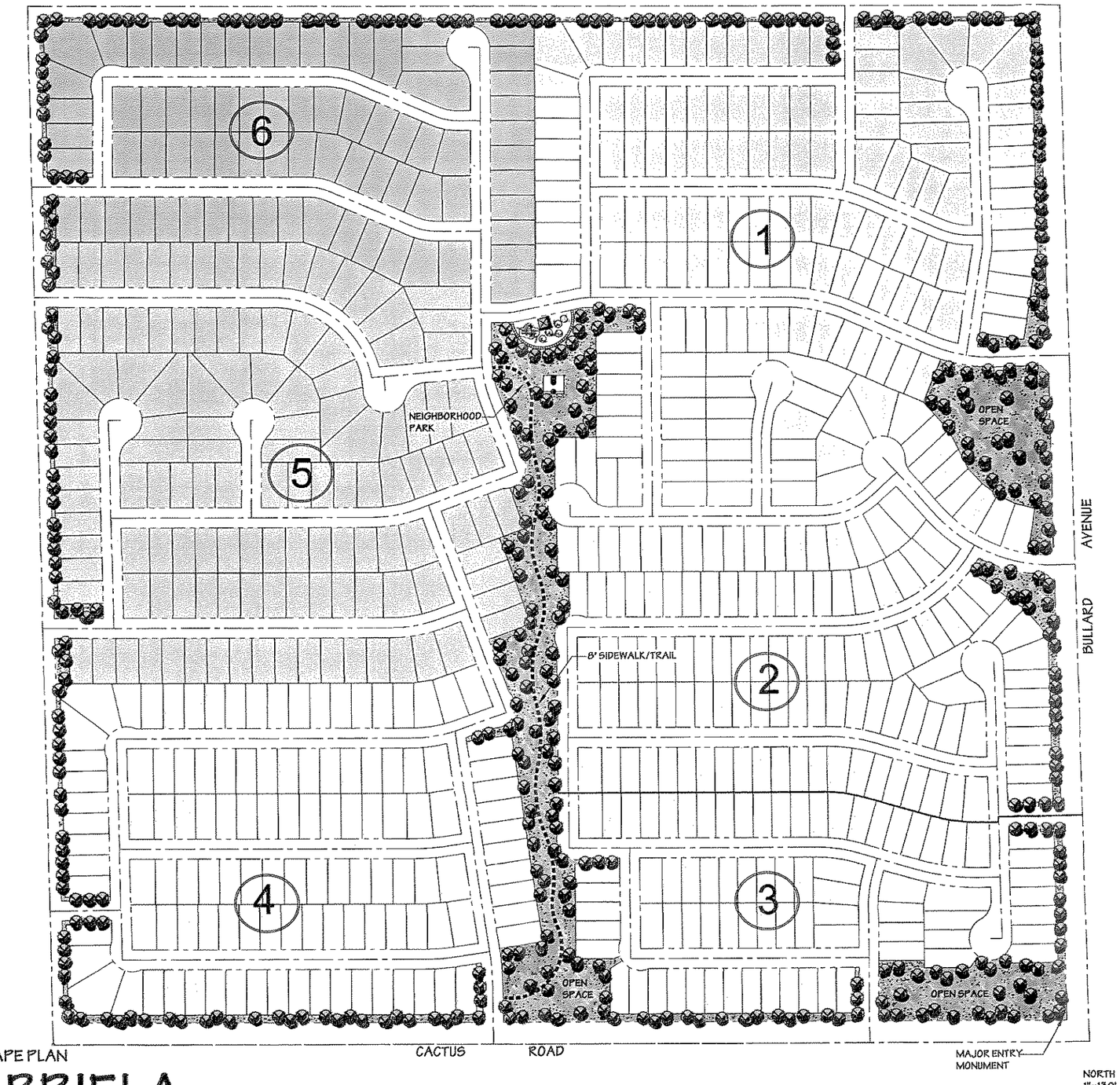

PHASE 1 - CONCEPTUAL SITE/LANDSCAPE PLAN

RANCHO GABRIELA

PREPARED FOR: STARDUST DEVELOPMENT

NORTH
1"=130'-0"
1.31.00
99029

0 130 260 390 520

f² GROUP
Landscape Design • Irrigation Systems
Native Plant Analysis • Urban Design
P.O. Box 6312 Chandler, AZ. 85246
Phone 480.752.0717 Fax 480.752.3066
E-mail f2group@aol.com

The McGough Group
Landscape Architecture
Urban Design Site Insight
Parks and Recreation
8200 E. Thomas Rd
Suite 204
Scottsdale, Arizona

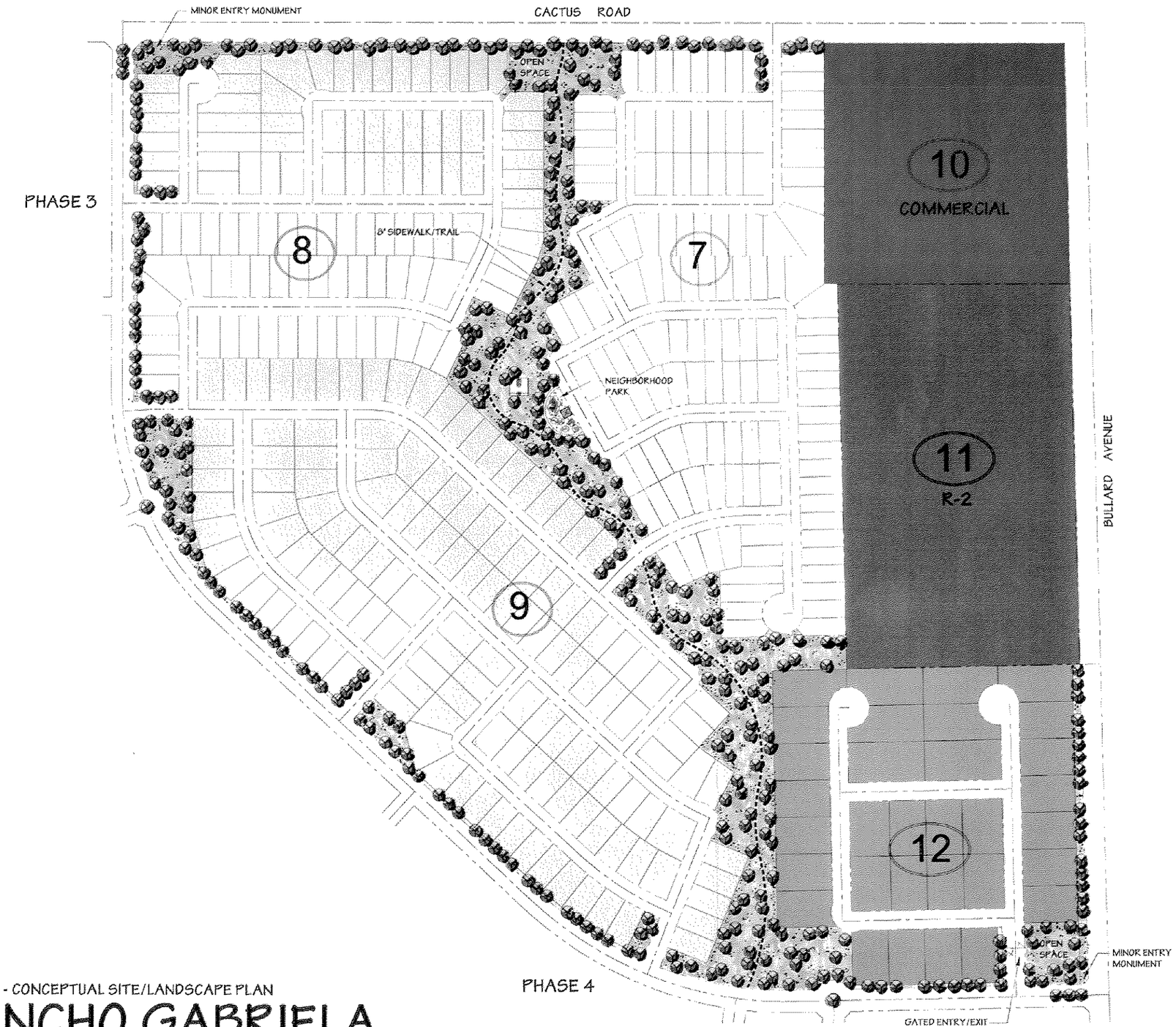

PHASE 2 - CONCEPTUAL SITE/LANDSCAPE PLAN

RANCHO GABRIELA

LAND PLAN PREPARED BY: URBAN CONCEPTS
PREPARED FOR: STARDUST DEVELOPMENT

NORTH
1"=130'-0"
6.19.00
99029

0 130 260 390 520

urban concepts
Planning & Urban Design
Landscape Architecture
P.O.Box 13115
Scottsdale, AZ 85267-3115
(480) 451-0944
Fax (480) 661-1572

f2 GROUP
Landscape Design • Irrigation Systems
Native Plant Analysis • Urban Design
P.O. Box 11157 Chandler AZ 85248
Phone 480.785.8787 Fax 480.895.1999
E-mail f2@uwpia.com

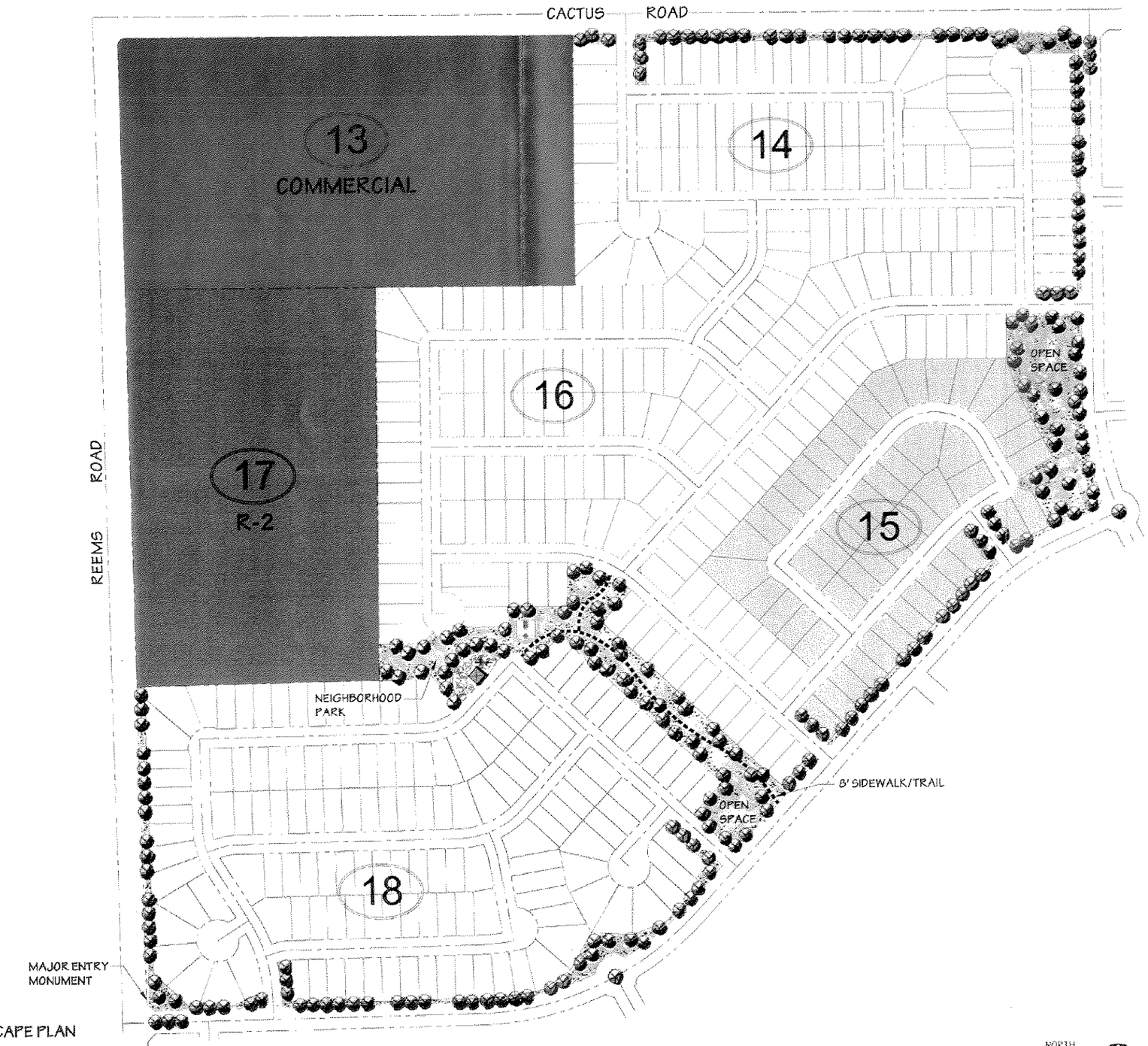

PHASE 3 - CONCEPTUAL SITE/LANDSCAPE PLAN

RANCHO GABRIELA

NORTH
1"=150'-0"
6.19.00
99029

0 150 260 390 520

urban concepts
Planning & Urban Design
Landscape Architecture
P.O.Box 13315
Scottsdale, AZ 85267-3315
(480) 451-9244
Fax (480) 661-1522

f2 GROUP
Landscape Design • Irrigation Systems
Native Plant Analysis • Urban Design
P.O. Box 11157 Chandler, AZ 85248
Phone 480.752.6017 Fax 480.895.1999
E-mail f2group@aol.com

LAND PLAN PREPARED BY: URBAN CONCEPTS
PREPARED FOR: STARDUST DEVELOPMENT

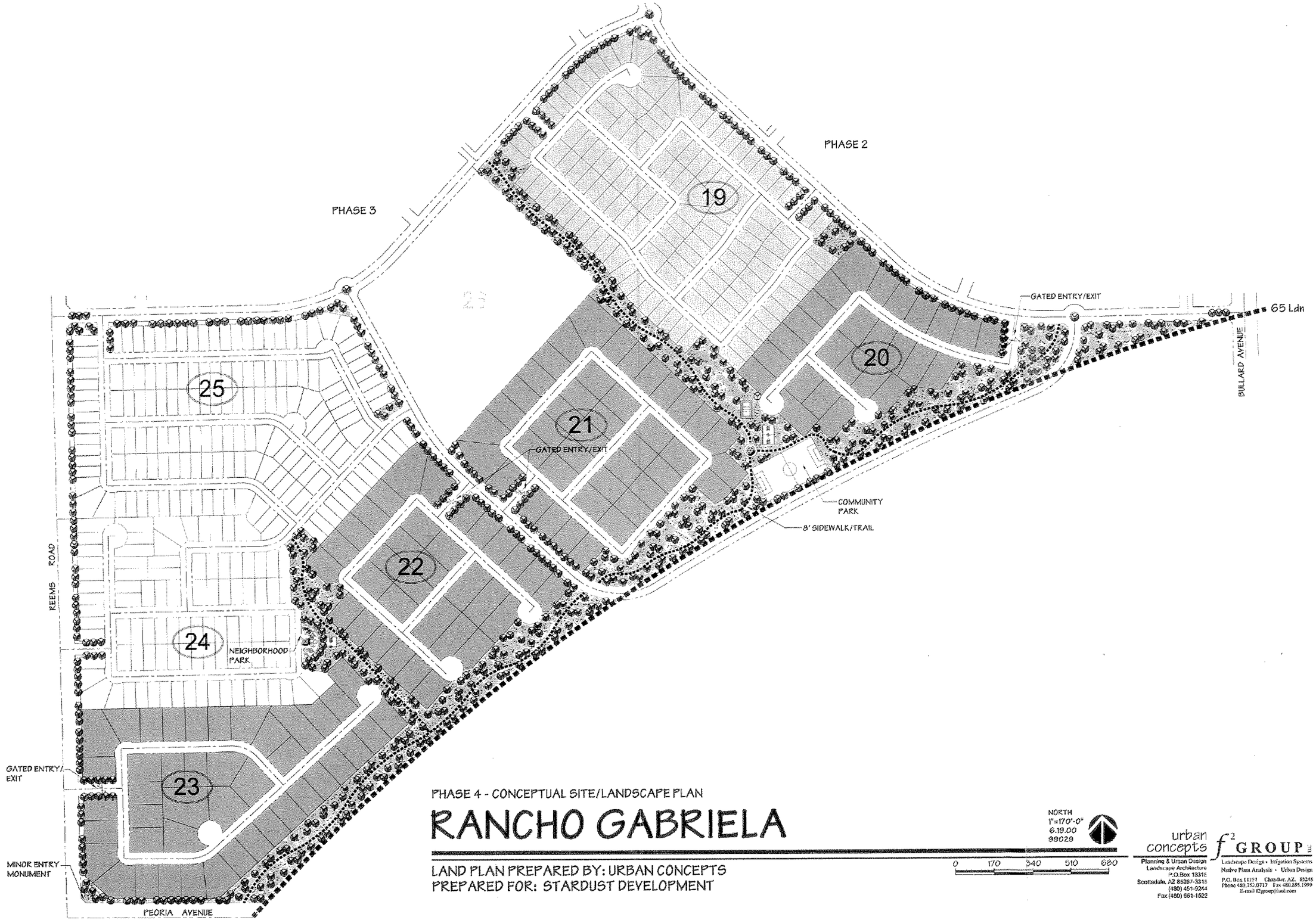

PHASE 4 - CONCEPTUAL SITE/LANDSCAPE PLAN

RANCHO GABRIELA

NORTH
1"=170'-0"
6.19.00
99029

0 170 340 510 680

LAND PLAN PREPARED BY: URBAN CONCEPTS
PREPARED FOR: STARDUST DEVELOPMENT

urban concepts
Planning & Urban Design
Landscape Architecture
P.O. Box 13315
Scottsdale, AZ 85267-3315
(480) 451-9244
Fax (480) 661-1522

f² GROUP INC
Landscape Design • Irrigation Systems
Native Plant Analysis • Urban Design
P.O. Box 11157 Chandler, AZ. 85248
Phone 480.752.0717 Fax 480.895.1999
E-mail f2group@aol.com

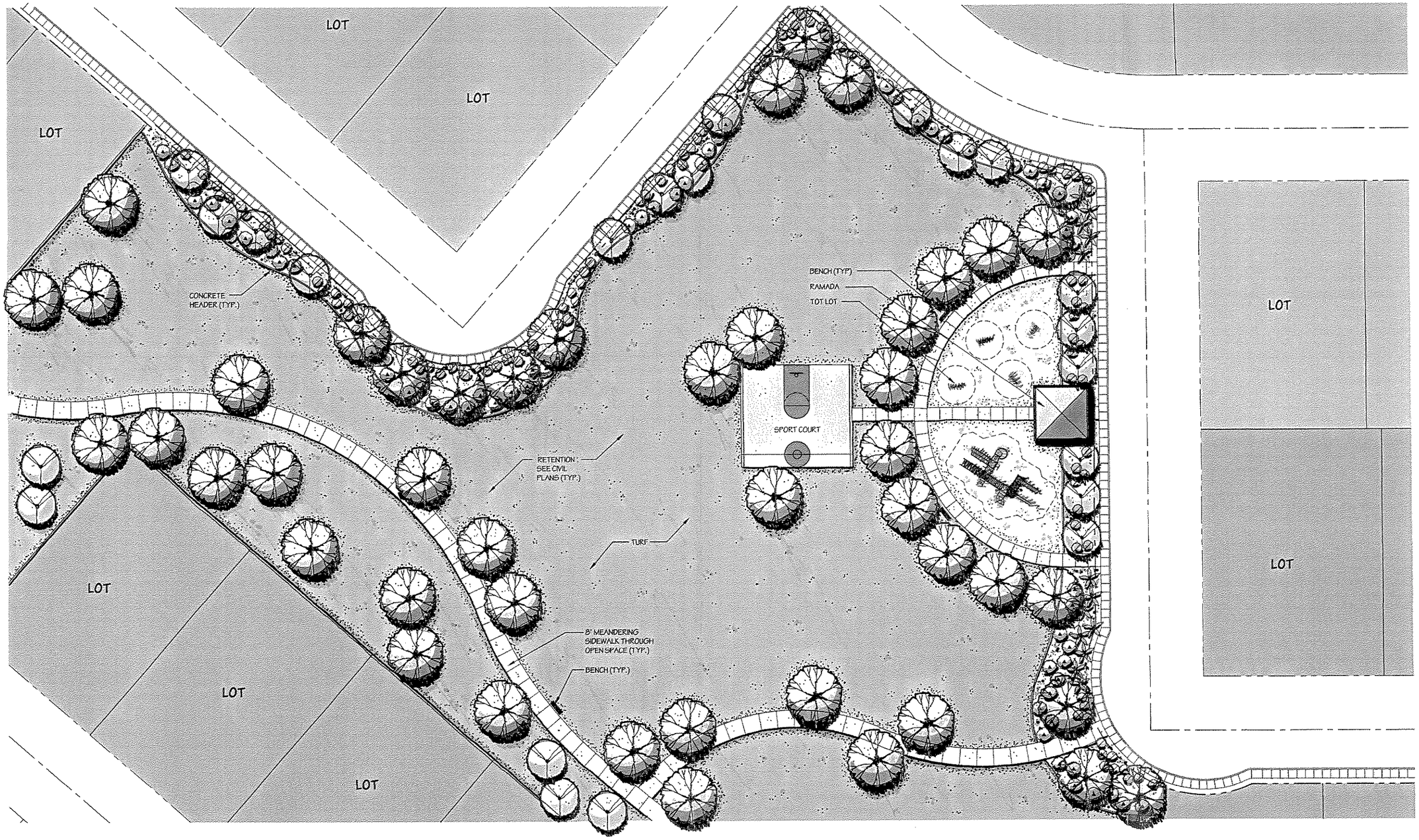

TYPICAL NEIGHBORHOOD PARK

RANCHO GABRIELA

PREPARED FOR: STARDUST DEVELOPMENT

NORTH
1"=20'-0"
1.31.00
99029

0 20 40 60 80

f² GROUP FRANKLIN & FRANKLIN
Landscape Design • Irrigation Systems
Native Plant Analysis • Urban Design
P.O. Box 6312 Chandler, AZ. 85246
Phone 480.752.0717 Fax 480.752.3066
E-mail f2group@aol.com

The McGough Group
Landscape Architecture
Urban Design Site Planning
Parks and Recreation
6200 E. Thomas Rd
Suite 204
Scottsdale, Arizona

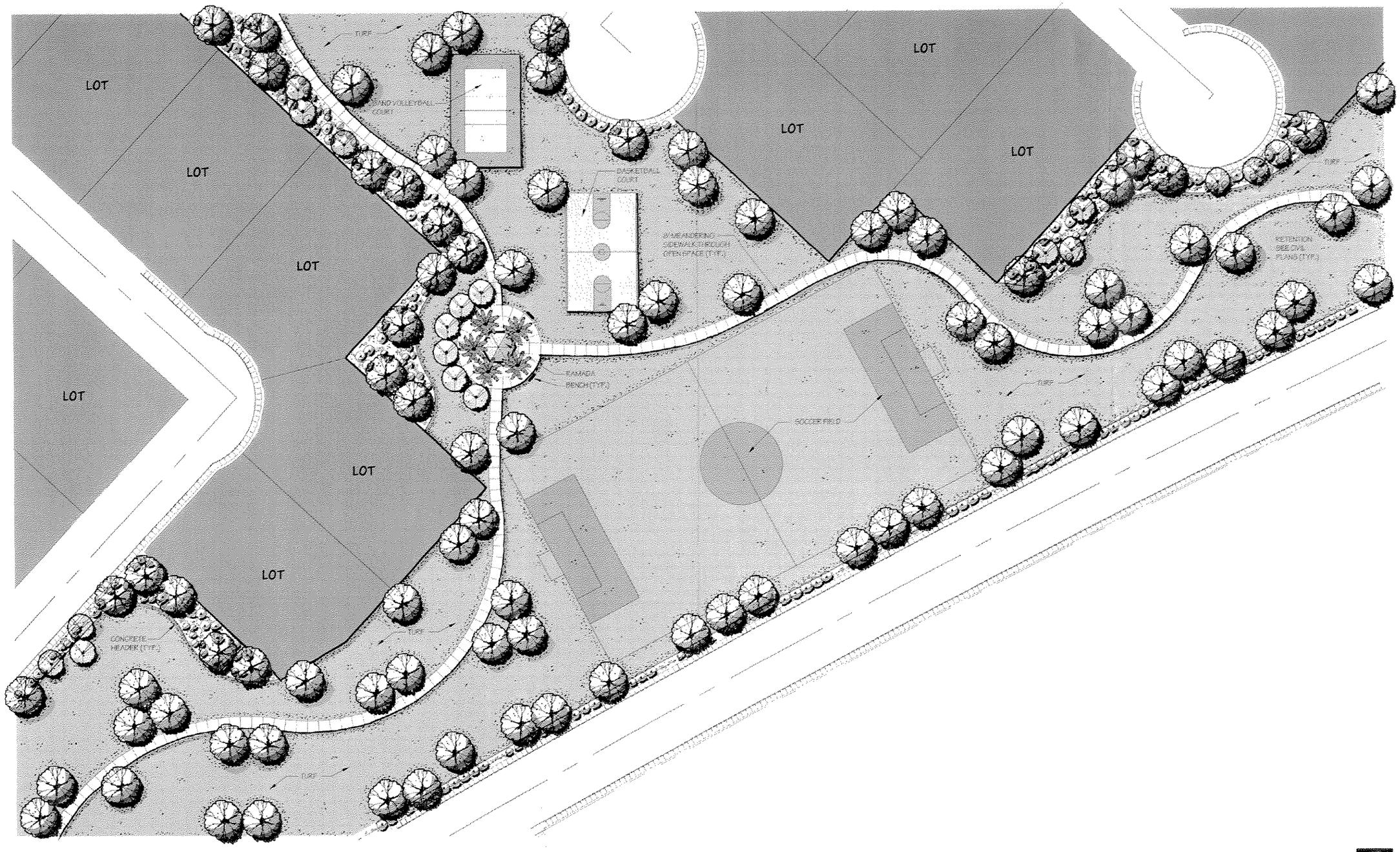

COMMUNITY PARK

RANCHO GABRIELA

PREPARED FOR: STARDUST DEVELOPMENT

NORTH
1"=30'-0"
6.19.00
99029

0 30 60 90 120

f² GROUP
Landscape Design • Irrigation Systems
Native Plant Analysis • Urban Design
P.O. Box 512, Chandler, AZ. 85246
Phone 480.963.0717 Fax 480.963.3366
Email f2group@aol.com

The McGough Group
Landscape Architecture
Urban Design Site Planning
Home and Garden
6350 N. Thomas Rd
Suite 204
Scottsdale, Arizona

KEY

6' MEANDERING SIDEWALK ALONG ARTERIAL STREETS

6' SIDEWALK ALONG COLLECTOR STREETS

8' MEANDERING SIDEWALK/TRAIL THROUGH OPEN SPACE

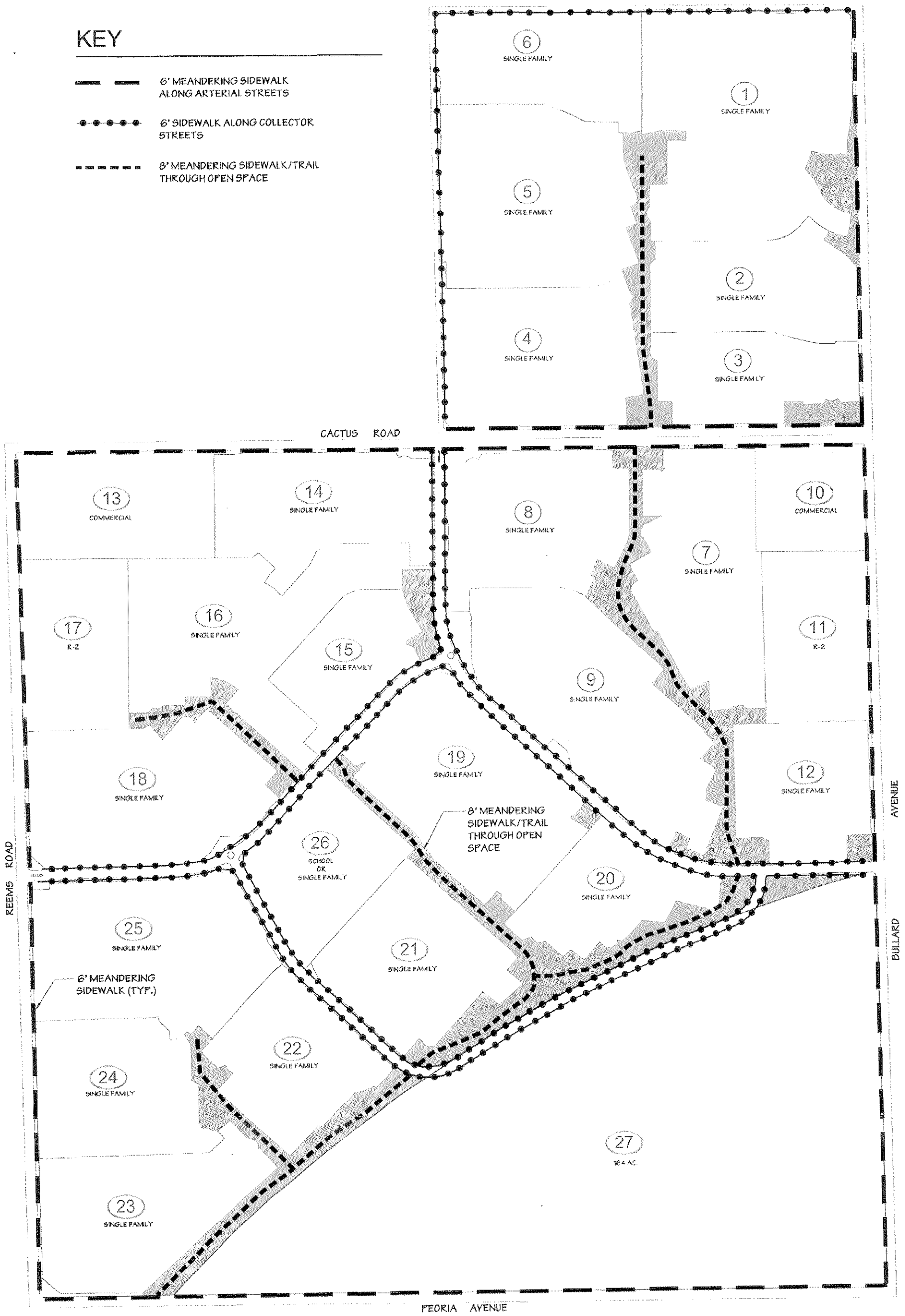

MASTER TRAIL PLAN

RANCHO GABRIELA

NORTH
1"=250'-0"
6.19.00
98029

0 250 500 750 1000

urban concepts
Planning & Urban Design
Landscape Architecture
P.O. Box 13345
Scottsdale, AZ 85267-3345
(480) 451-9244
Fax (480) 991-1582

f2 GROUP
Landscape Design · Irrigation Systems
Native Plant Analysis · Urban Design
P.O. Box 11157 Chandler, AZ 85246
Phone (480) 753-6111 Fax (480) 895-1999
E-mail: f2group@aol.com

LAND PLAN PREPARED BY: URBAN CONCEPTS
PREPARED FOR: STARDUST DEVELOPMENT

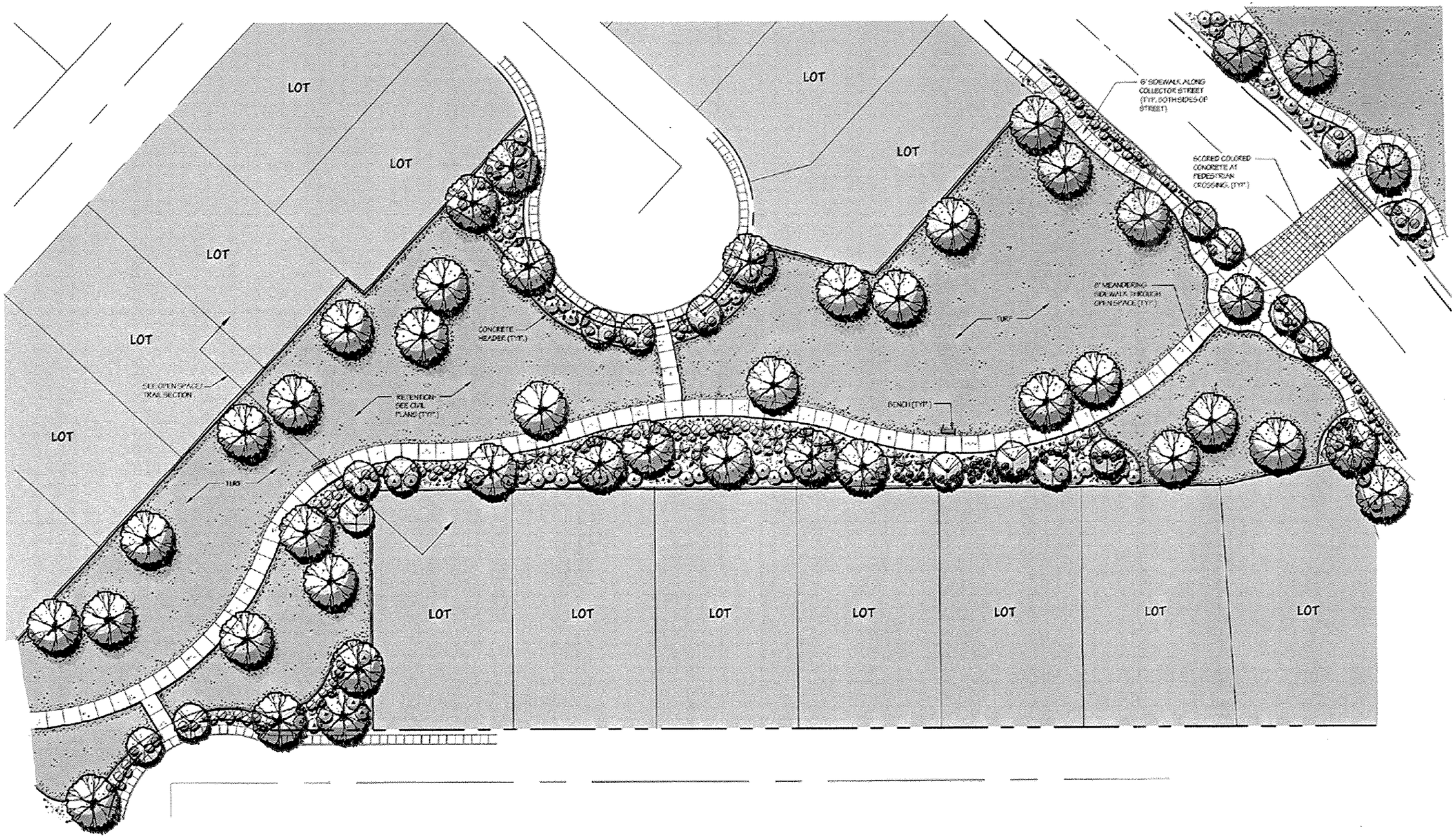

TYPICAL OPEN SPACE TRAIL PLAN

RANCHO GABRIELA

PREPARED FOR: STARDUST DEVELOPMENT

NORTH
1"=20'-0"
L3L00
99029

0 20 40 60 80

f² GROUP
Landscape Design • Irrigation Systems
Native Plant Analysis • Urban Design
P.O. Box 6342 Chandler, AZ 85246
Phone 480.792.0537 Fax 480.792.9266
Email f2group@aol.com

The McGough Group
Landscape Architecture
Urban Design, Site Inventory
Parks and Recreation
8200 E. Thomas Rd
Suite 204
Scottsdale, Arizona

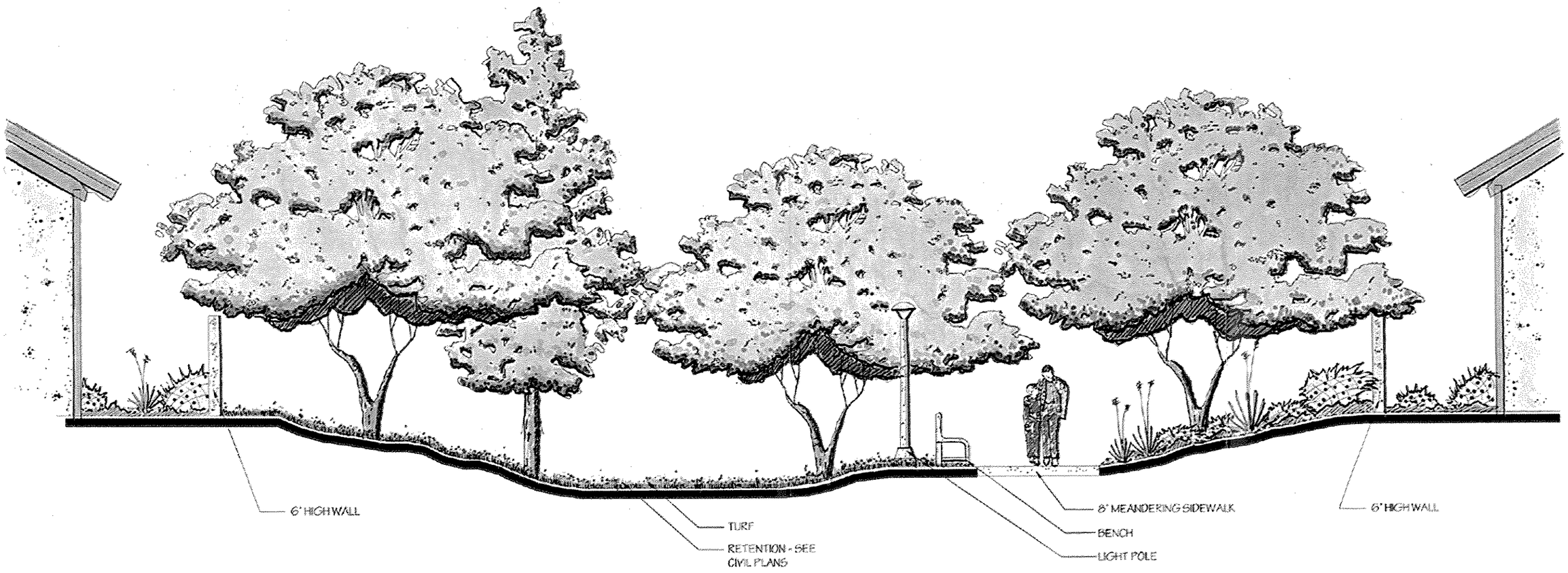

OPEN SPACE/TRAIL SECTION

RANCHO GABRIELA

PREPARED FOR: STARDUST DEVELOPMENT

NORTH
3/8"=1'-0"
L31.00
99029

f2 GROUP

The McGough Group

RANCHO GABRIELA

STREET CROSS SECTIONS

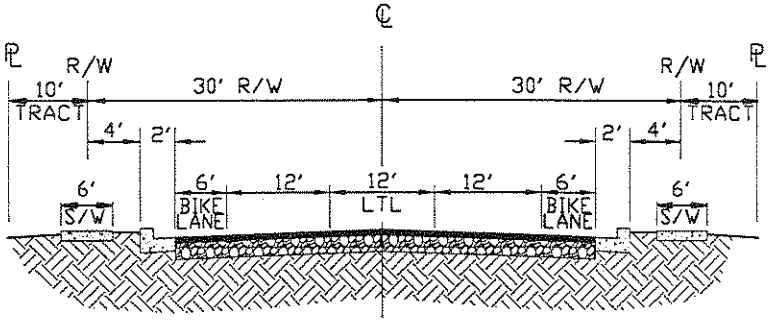

TYPICAL COLLECTOR
(NTS)

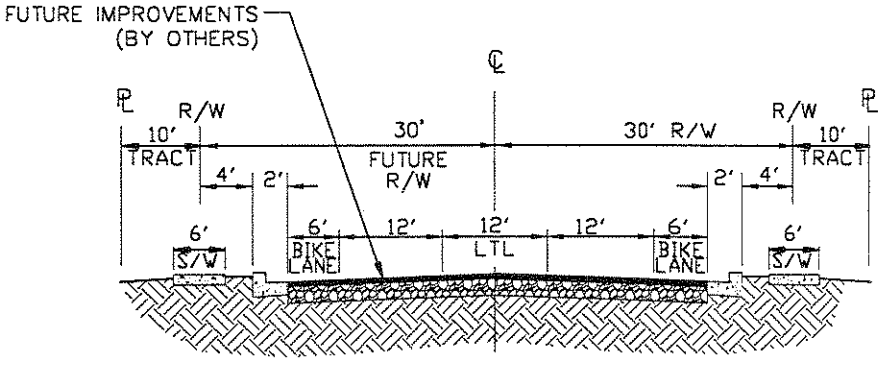

COLLECTOR (NTS)

151st AVENUE LOOKING NORTH

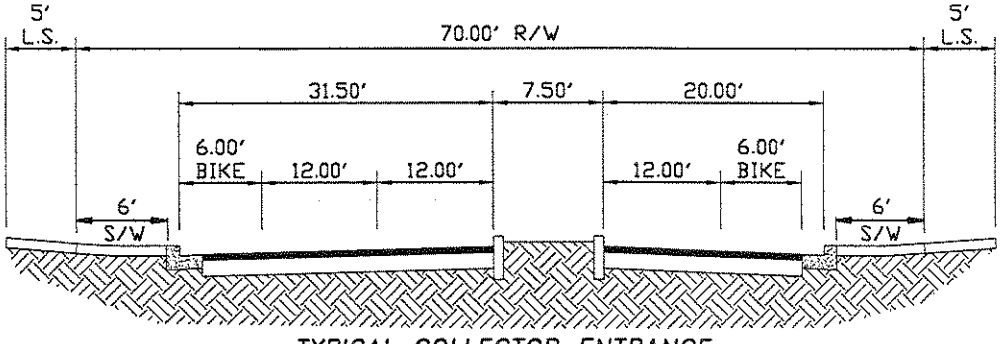

TYPICAL COLLECTOR ENTRANCE
(NTS)

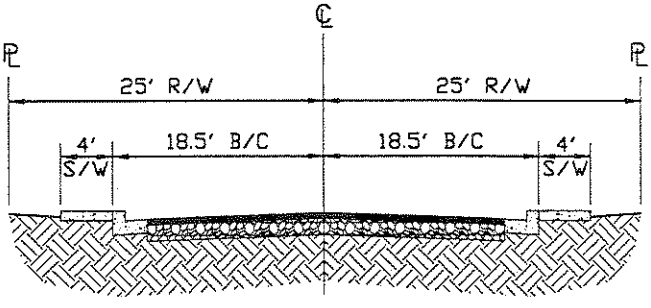

TYPICAL LOCAL STREET
(NTS)

STAR0076
2/7/2000
PAGE 1 OF 3

RANCHO GABRIELA

STREET CROSS SECTIONS

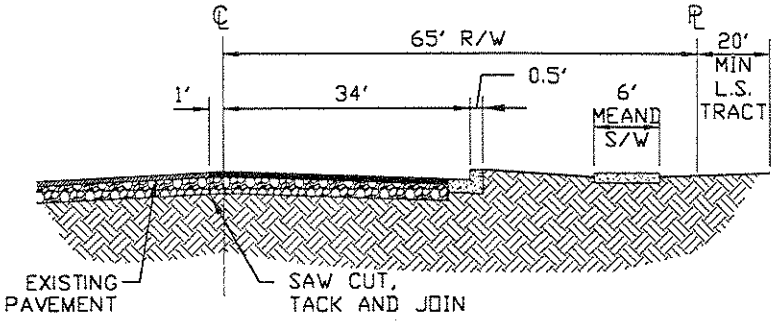

MAJOR ARTERIAL (NTS)

REEMS ROAD LOOKING NORTH

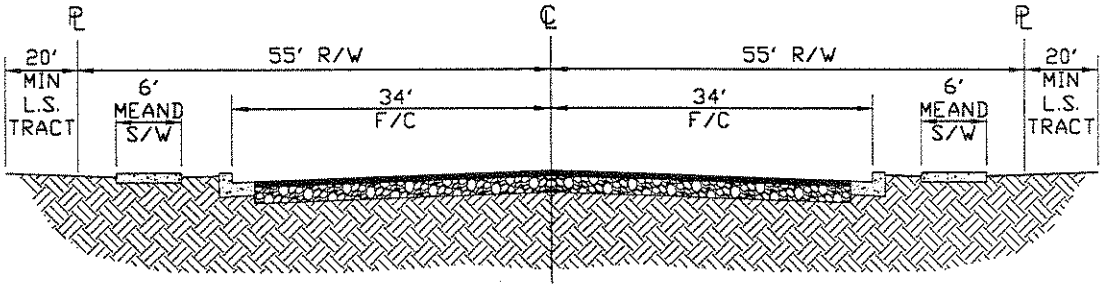

MINOR ARTERIAL (NTS)

CACTUS ROAD

BETWEEN 151st AVENUE AND BULLARD AVENUE

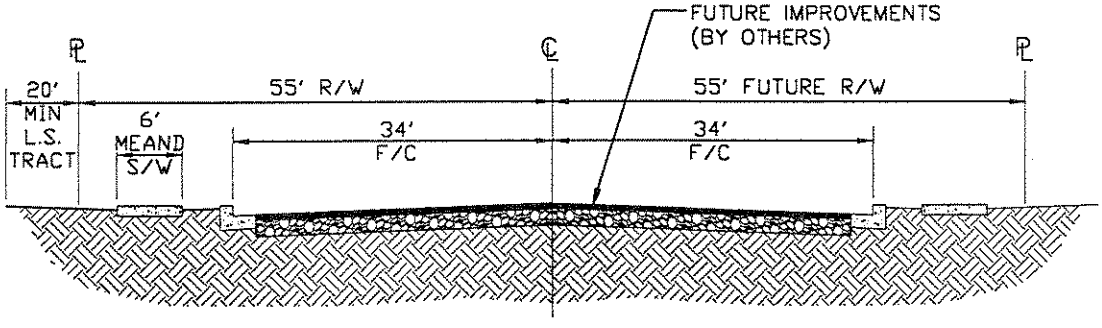

MINOR ARTERIAL (NTS)

CACTUS ROAD LOOKING WEST

BULLARD AVENUE LOOKING NORTH

STAR0076
2/7/2000
PAGE 2 OF 3

XXXX-0000 jct 02/07/00 15:57:50 jct D:\STAR768X11dwg.dwg

RANCHO GABRIELA

STREET CROSS SECTIONS

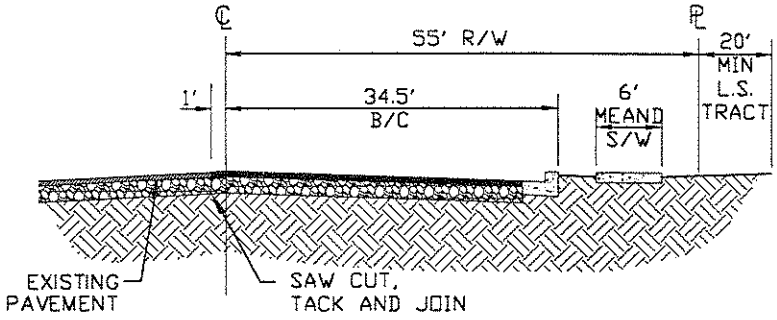

MINOR ARTERIAL (NTS)

PEORIA AVENUE LOOKING WEST

STAR0076
2/7/2000
PAGE 3 OF 3

XXXX-0000 jcf 02/07/00 15:57:50 jcf D:\STAR768X11dwg.dwg

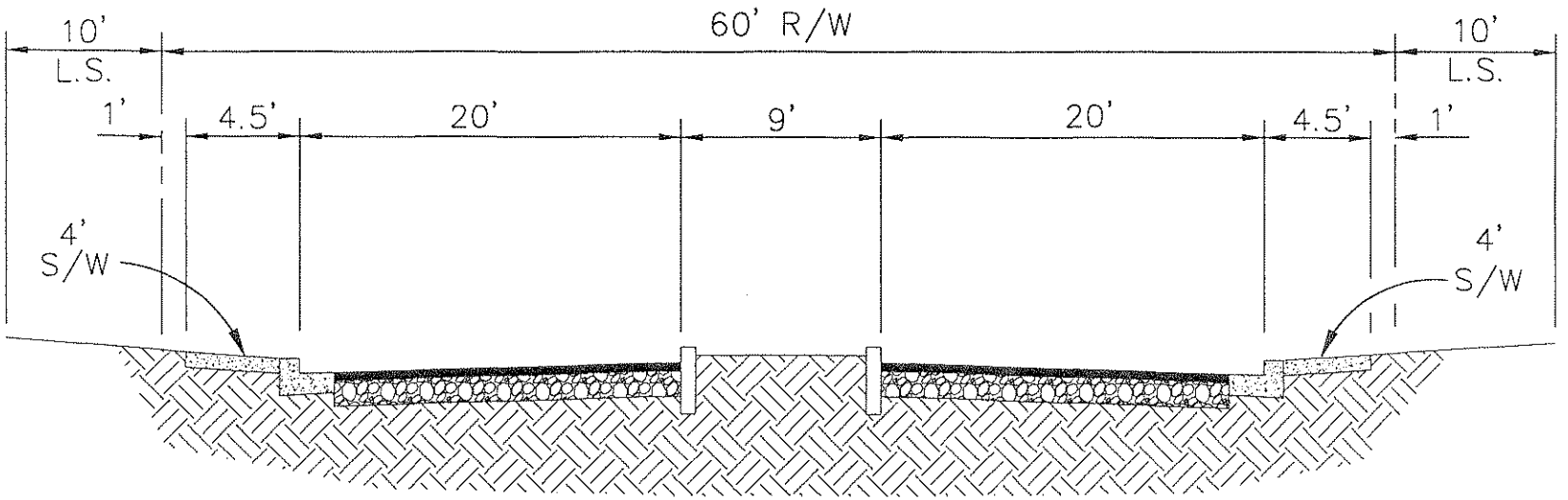

TYPICAL ENTRANCE – R1–18 PAD

(NTS)

STAR0076
6/20/00
SHEET 1 OF 1

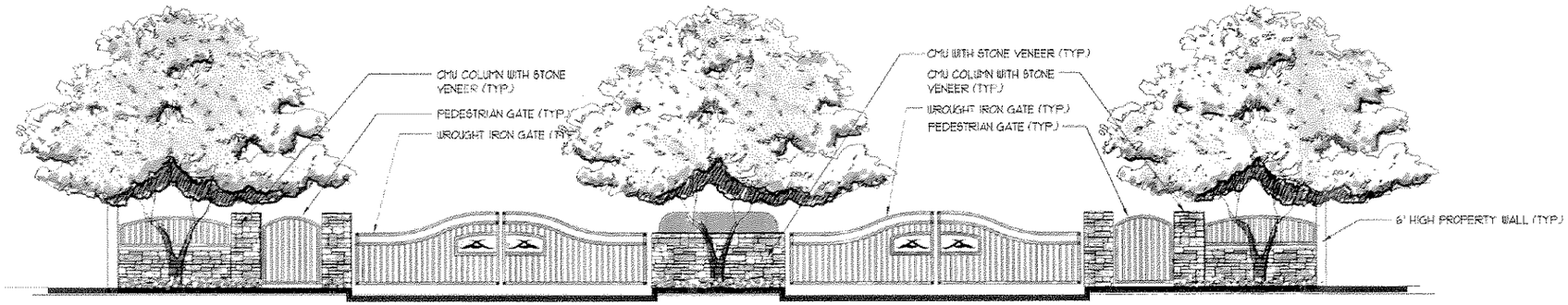

CONCEPTUAL GATED ENTRY ELEVATION

1/4"=1'-0"

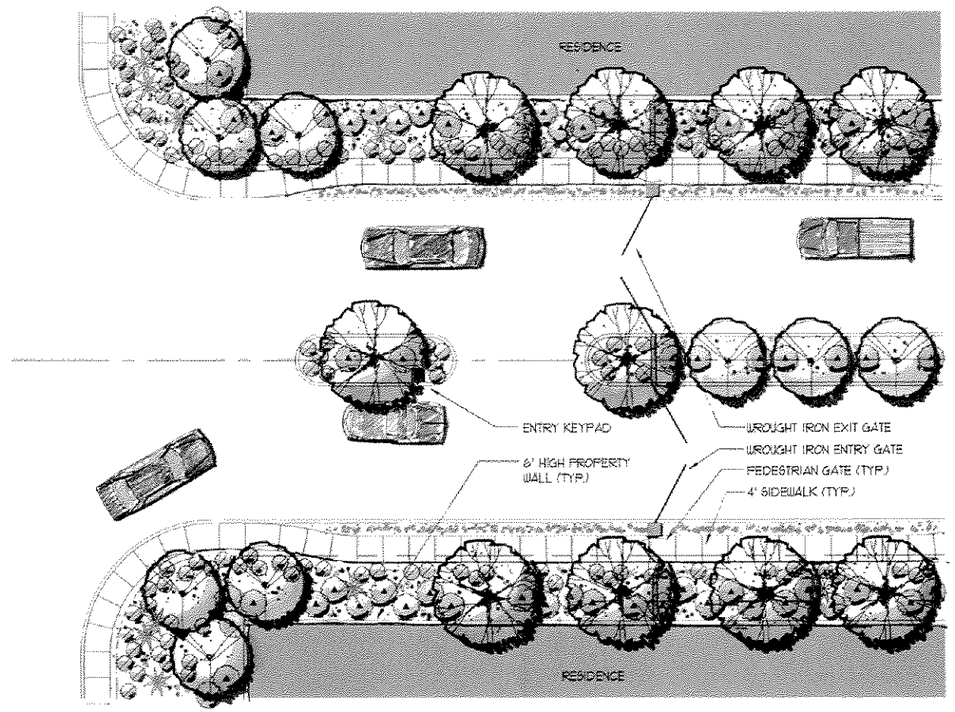

CONCEPTUAL GATED ENTRY PLAN VIEW

1"=10'-0"

CONCEPTUAL GATED ENTRY ELEVATION/PLAN

RANCHO GABRIELA

PREPARED FOR: STARDUST DEVELOPMENT

6.19.00

f² GROUP
Landscape Design • Irrigation Systems
Native Plant Analysis • Urban Design
P.O. Box 11157 Chandler, AZ 85248
Phone 480.752.0717 Fax 480.305.1969
E-mail: f2group@aol.com

The McGough Group
Landscape Architecture
Urban Design, Site Analysis
Plans and Restoration
6000 E. Thomas Rd
Suite 304
Scottsdale, Arizona

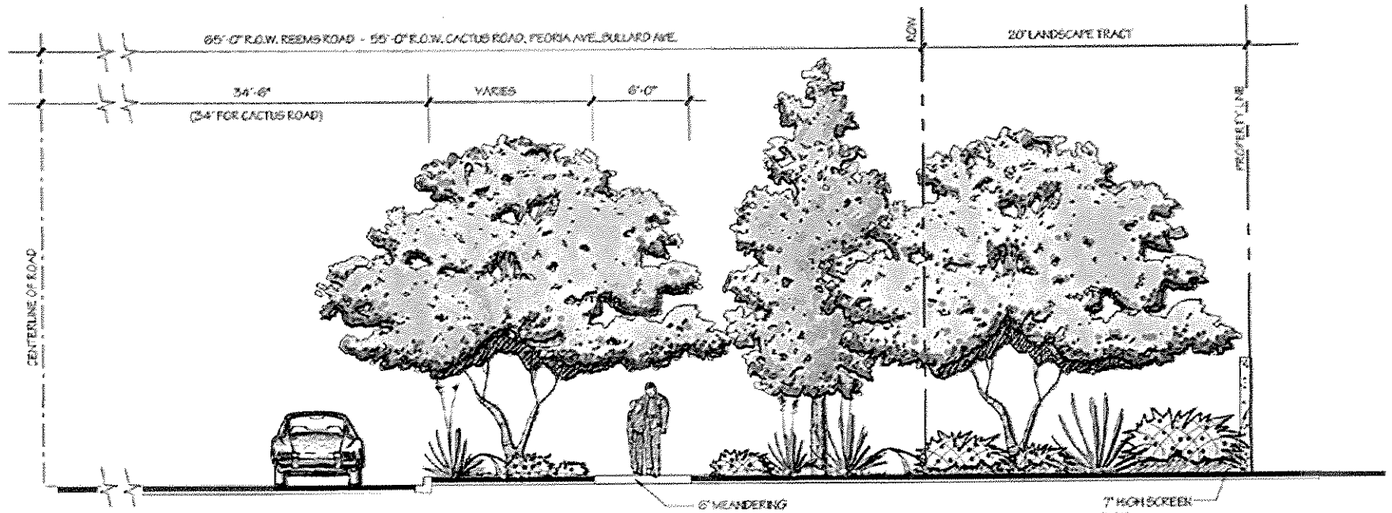

REEMS, PEORIA, BULLARD, CACTUS ROAD TYPICAL SECTION

1/4" = 1'-0"

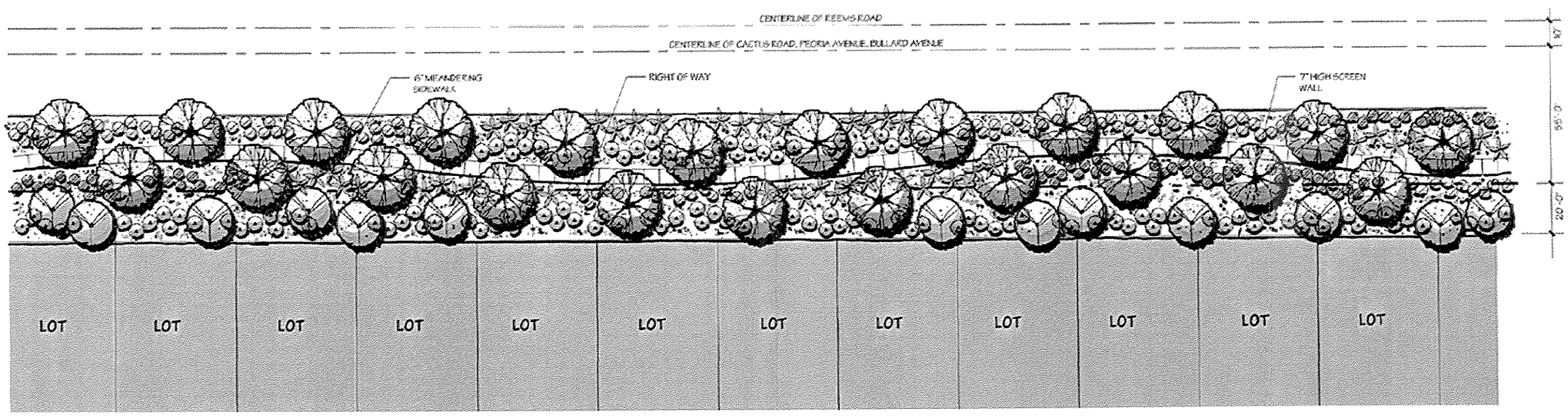

REEMS, PEORIA, BULLARD, CACTUS ROAD PLAN VIEW

1"=20'-0"

TYPICAL STREET SECTION /PLAN VIEW

RANCHO GABRIELA

PREPARED FOR: STARDUST DEVELOPMENT

NORTH
1"=20'-0"
1.31.00
980729

0 20 40 60 80

f² GROUP

Landscape Design • Irrigation Systems
Native Plant Analysis • Urban Design

The McGough Group

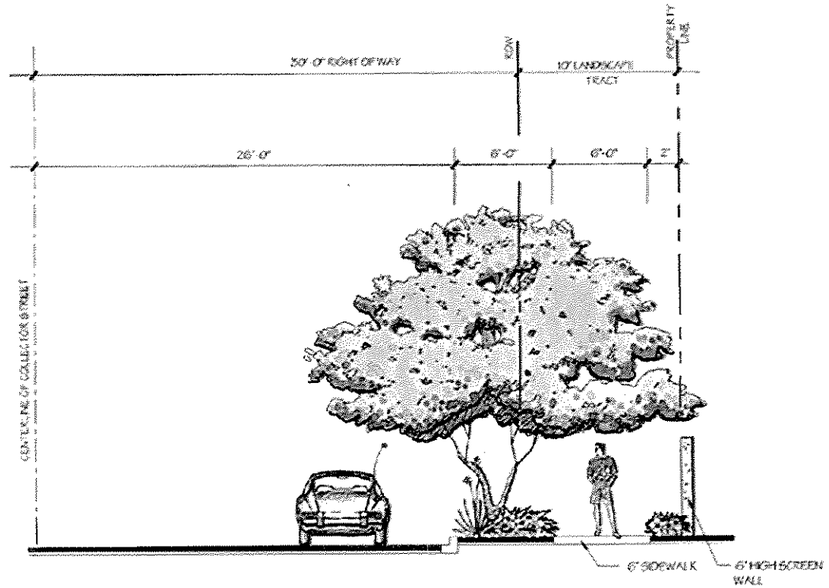

TYPICAL COLLECTOR STREET SECTION

1/4" = 1'-0"

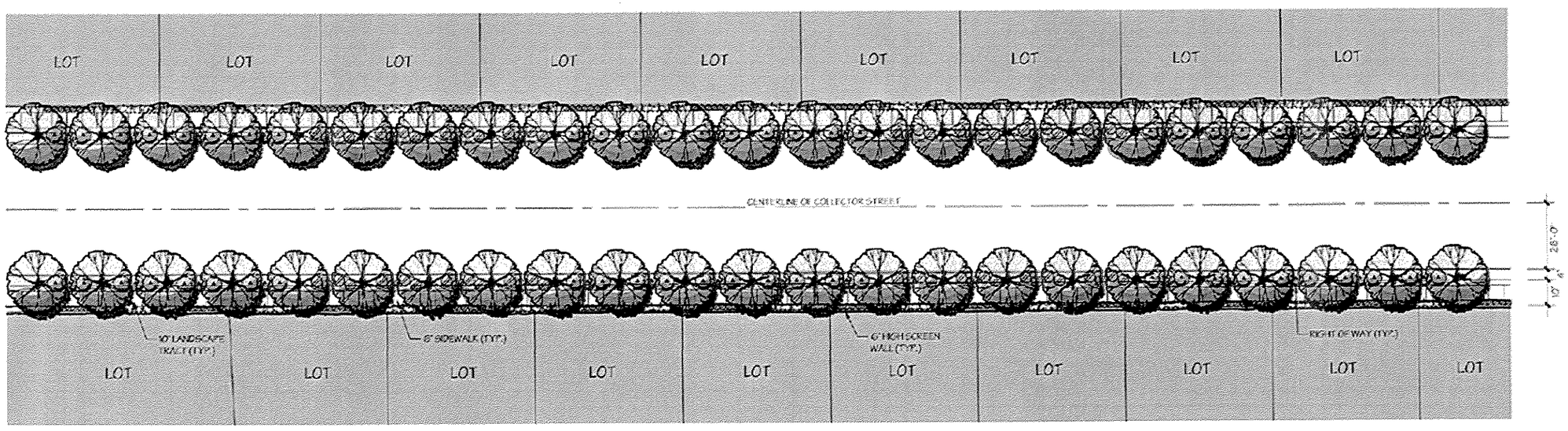

TYPICAL COLLECTOR STREET PLAN VIEW

1"=20'-0"

TYPICAL COLLECTOR STREET SECTION/PLAN VIEW

RANCHO GABRIELA

PREPARED FOR: STARDUST DEVELOPMENT

NORTH
1"=20'-0"
151.00
99.020

0 20 40 60 80

f² GROUP

The McGough Group

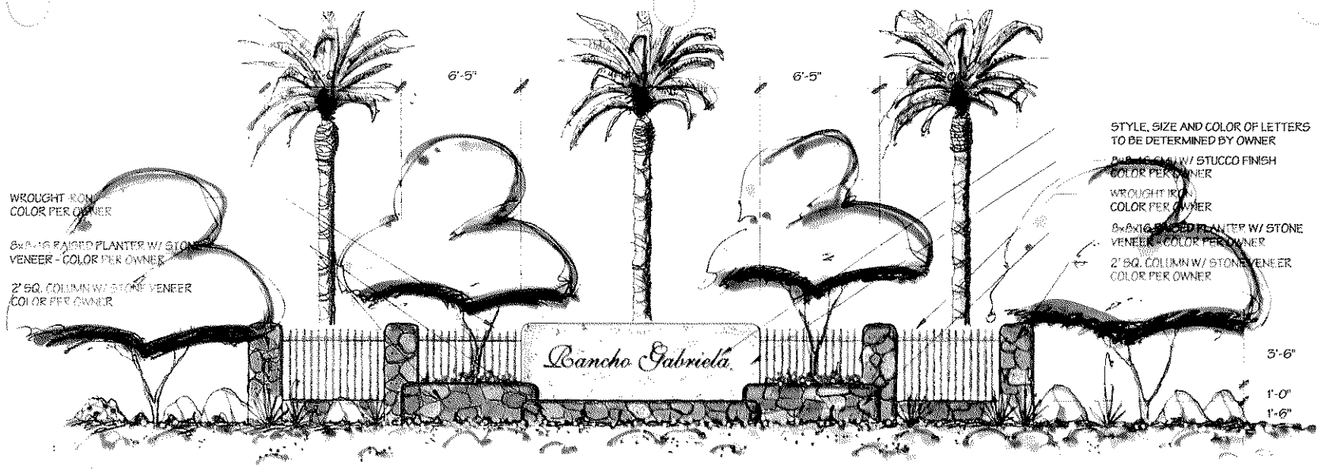

A MAJOR MONUMENTATION 1/4"-1'-0"

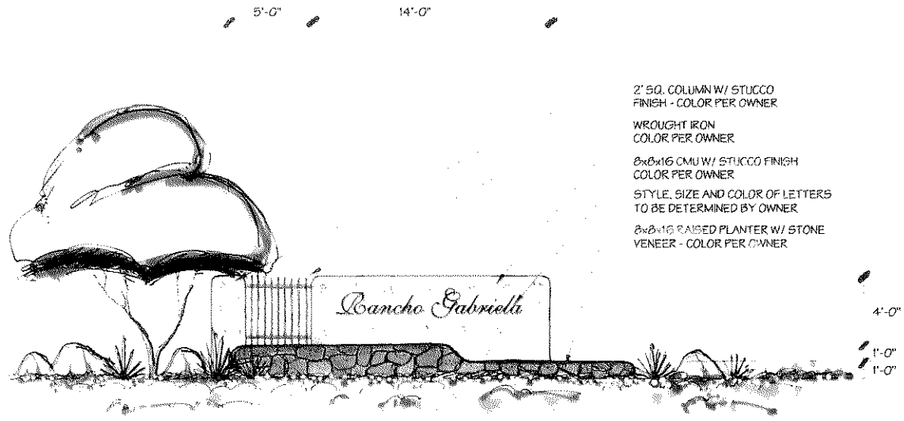

B MINOR MONUMENTATION 1/4"-1'-0"

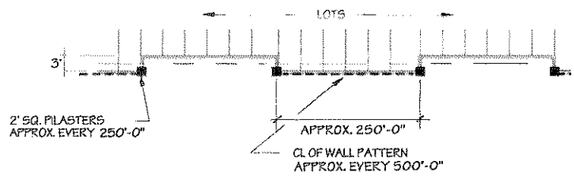

E WALL OFFSET DETAIL N.T.S.
MAJOR ARTERIALS ONLY

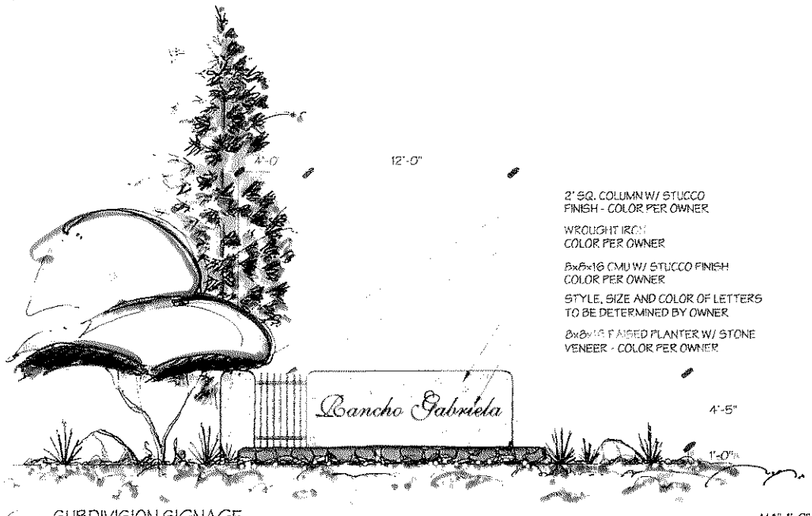

C SUBDIVISION SIGNAGE 1/4"-1'-0"

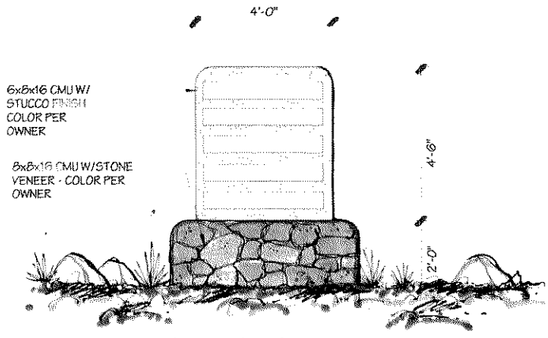

F DIRECTIONAL SIGNAGE 1/2"-1'-0"

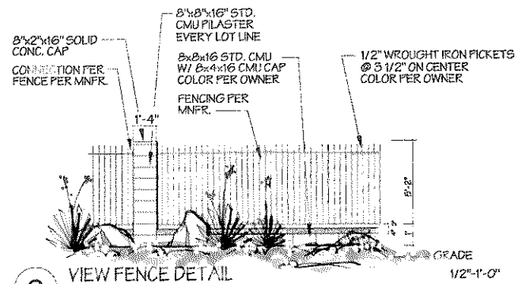

G VIEW FENCE DETAIL 1/2"-1'-0"

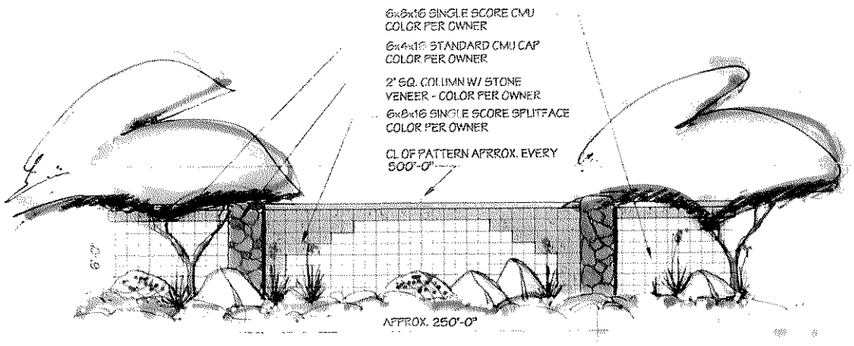

D PROJECT THEME WALL ELEVATION 1/4"-1'-0"

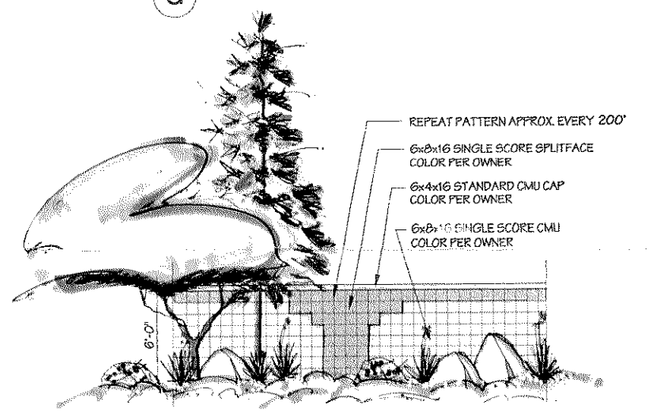

H COLLECTOR SCREEN WALL ELEVATION 1/4"-1'-0"

CONCEPTUAL SIGNAGE AND WALL DETAILS

RANCHO GABRIELA

NORTH
9.11.98

GILMORE GRAVES, INC.

PREPARED FOR: STARDUST DEVELOPMENT

KEY

- MAJOR ENTRY MONUMENT - SEE DETAIL
- MINOR ENTRY MONUMENT - SEE DETAIL
- 7' HIGH PROJECT THEME WALL - SEE DETAIL
- 6' HIGH COLLECTOR SCREEN WALL - SEE DETAIL
- 6' HIGH VIEW FENCE - SEE DETAIL

NOTE: VIEW FENCE TO BE LOCATED ADJACENT TO OPEN SPACES, EXACT LOCATION TO BE DETERMINED BY DEVELOPER

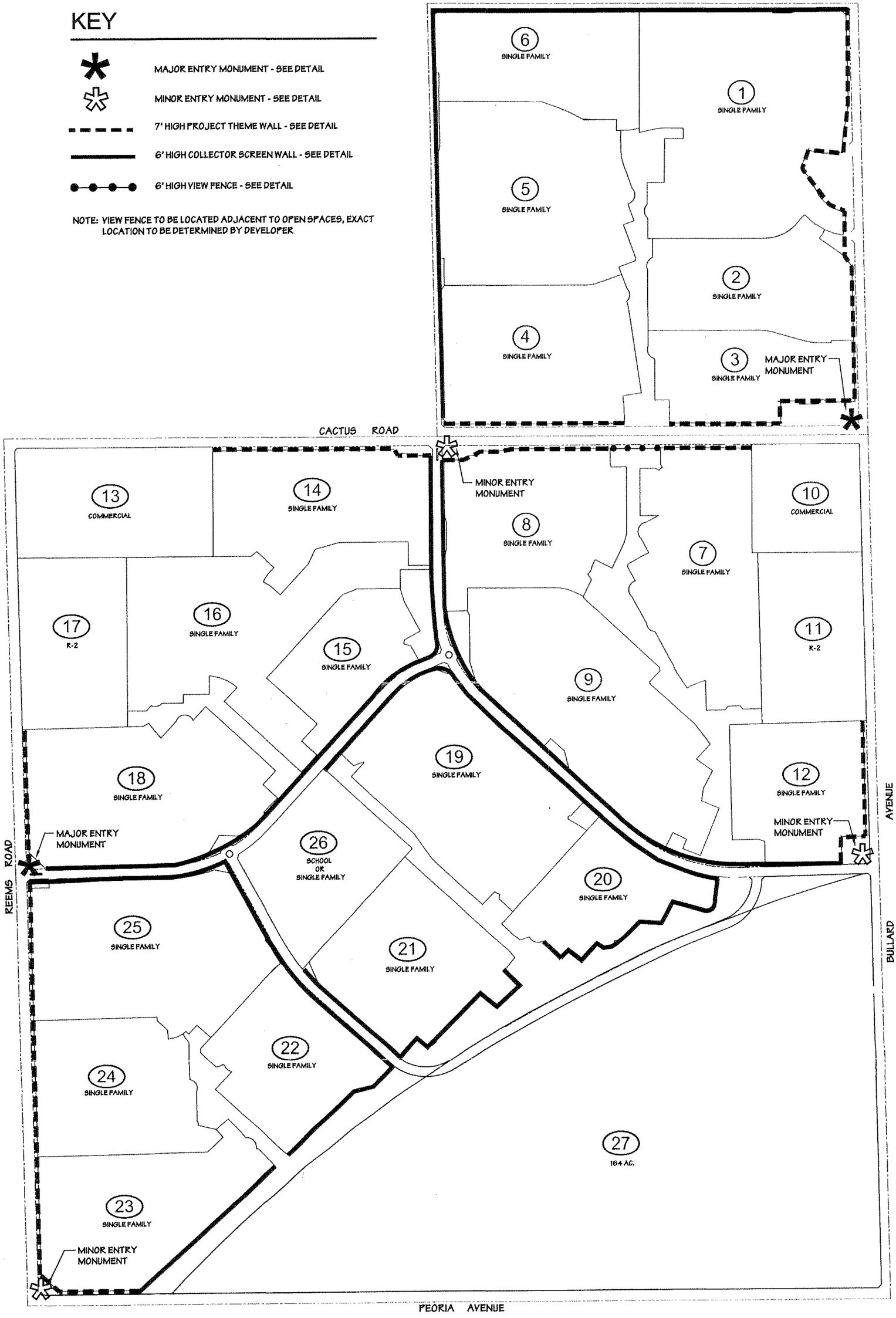

CONCEPTUAL MASTER WALL PLAN

RANCHO GABRIELA

NORTH
1"=250'-0"
6.19.00
99029

0 250 500 750 1000

LAND PLAN PREPARED BY: URBAN CONCEPTS
PREPARED FOR: STARDUST DEVELOPMENT

urban concepts
Planning & Urban Design
Landscape Architecture
P.O.Box 13315
Scottsdale, AZ 85267-3315
(480) 451-9244
Fax (480) 881-1522

f² GROUP
Landscape Design • Irrigation Systems
Native Plant Analysis • Urban Design
P.O. Box 11157 Chandler, AZ 85248
Phone 480.752.0117 Fax 480.893.1999
E-mail f2group@aol.com

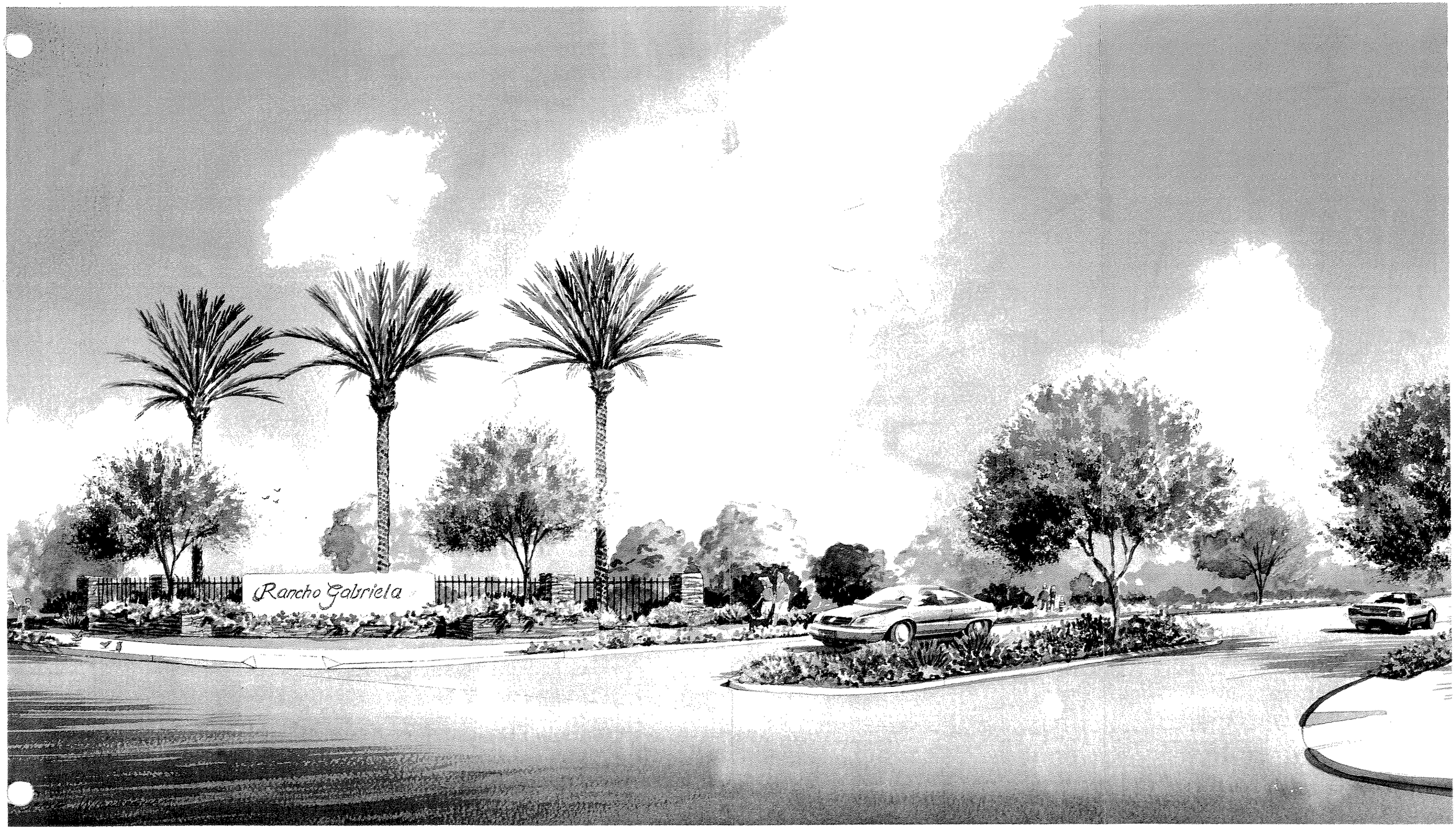
Rancho Gabriela

Conceptual Plant Palette

Trees:	Acacia	Acacia species
	Mediterranean Fan Palm	Chamaerops humIlis
	Sissoo Tree	Dalbergia sissoo
	Ash	Fraxinus species
	Olive	Olea europaea "swan hill"
	Phoenix Date Palm	Phoenix dactylifera
	Pine	Pinus species
	Chinese Pistache	Pistachia chinensis
	Thornless Chilean Mesquite	Prosopis chilensis
	Evergreen Pear	Pyrus species
	Oak	Quercus species
	Brazilian Pepper Tree	Schinus terebinthifolius
	Evergreen Elm	Ulmus parvifolia
	Mexican Fan Palm	Washingtonia robusta
Shrubs:	Bougainvillea	Bougainvillea species
	Red Bird of Paradise	Caesalpinia pulcherrima
	Cassia	Cassia species
	Bush Morning Glory	Convolvulus cneorum
	Baja Fairy Duster	Calliandra californica
	Sage species	Leucophyllum species
	Deer Grass	Muhlenbergia rigens
	Oleander	Oleander species
	Wheeler's Dwarf Pitt.	Pittosporum tobira
	Cape Plumbago	Plumbago auriculata
	Fraser's Photinia	Photina fraseri
	Chaparral Sage	Salvia clevelandii
	Autumn Sage	Salvia greggii "sierra linda"
	Yellow Bells	Tecoma stans
Accents:	Agave	Agave species
	Yellow Bulbine	Bulbine frutescens
	Desert Spoon	Dasylirion wheeleri
	Red Yucca	Hesperaloe parviflora
Groundcover:	Trailing Acacia	Acacia redolens

Centennial Hybrid Broom	Baccharis centennial
Common Bermuda	Cynodon dactylon
Prostrate Indigo Bush	Dalea greggi
Daylily	Hemerocallis
Angelita Daisy	Hymenoxyus acaulis
"New Gold" Lantana	Lantana montevidensis
Purple Trailing Lantana	Lantana montevidensis
Rocky Point Ice Plant	Malephora lutea
Mexican Evening Primrose	Oenothera berlandieri
Periwinkle	Vinca Minor

Community Site Development Design Guidelines
(Refer to the Appropriate Exhibits and Appendix A for Technical Detail)

Land Use Plan

R1-18 PAD

- One lot size will be provided–100′ x 150′.
- Front setbacks shall be a standard 25′.
- Optional "card gates" and private streets for executive housing.

R1-5 PAD

- Four lot sizes will be provided–48′ x 115′, 53′ x 115′, 58′ x 115′, and 63′ x 115′.
- Curvilinear streets shall be utilized to create a varied streetscape.
- Varied standard front setbacks shall range from 18 feet to 24 feet. The front setback shall vary a minimum of 3 feet on adjacent lots.
- Front setbacks for side entry garages shall be 12 feet.
- Front setbacks for a house structure with a recessed garage is 15 feet.
- There shall be a minimum of 18 feet from the property line to the face of the garage door.

R-2 PAD

- Detached cluster homes are proposed.

- Cluster homes around a common access or courtyard create a varied streetscape.

C-2 PAD

- All development will adhere to the City of Surprise C-2 development standards.

Industrial PAD

- All development will adhere to the City of Surprise I-1 development standards. Uses will be restricted to the list presented in Section 12 of this document.

Open Space/Common Areas

- A minimum open space percentage of 10% shall be provided within the underlying residential zoning districts, as required by the PAD ordinance. The proposed plan provides 11.9% open space in the R1-18 PAD and R1-5 PAD zoning district without the school site, and 14.8% including the school site.

- Active and passive amenities shall be installed in the open space areas throughout as follows:

<u>Community Park</u>

a) Full Basketball Court;
b) Soccer Field with Goals;
c) Sand Volleyball Court;
c) Ramada;
h) Benches;
j) Trash Receptacle;

k) Drinking Fountain.

Typical Neighborhood Park

a) Half Basketball Court;
b) Pre-Teen Play Structure;
c) Ramada;
d) Swing Unit—Two or Four Swings;
e) Spring Animals;
f) BBQ Grill;
g) Picnic Tables (2);
h) Benches (2);
i) Bike Rack Unit;
j) Trash Receptacle;
k) Drinking Fountain.

- Mid- and low-level lighting will be provided along the trail system in the children's play areas.

- The Rancho Gabriela Community Association shall maintain the open space and common areas.

Entry Monumentation/Perimeter Walls/Fencing

- Formal entry monumentation shall be constructed at the locations shown on *Exhibit N–"Conceptual Master Wall Plan."*

- The monumentation shall be constructed as depicted on *Exhibit M–"Conceptual Signage & Wall Details."*

- Perimeter theme walls shall be constructed of masonry block with decorative patterns and stone veneer columns. Along arterial streets, stone veneer columns will be placed approximately every 250′ and a

decorative pattern occurs every 500′. Along the collector streets, a decorative pattern will be placed every 200′. See *Exhibit M–"Conceptual Signage & Wall Details"*.

- Theme walls will be constructed of 6" x 8" x 16" masonry block.

- View fence shall be constructed as depicted on *Exhibit M–"Conceptual Signage & Wall Details"* adjacent to open space areas. Actual view fence locations will be shown on the landscaping plans.

- Permanent chain link and wooden fencing shall not be permitted, except for temporary construction fencing. Wrought iron and wood gates will be permitted.

- Residential fences shall be built according to the City of Surprise Title 17 Zoning Code 17.32.060D (see Section 11).

Site Development Landscaping

- Xeriscape plant material and decomposed granite shall be used for the arterial and collector streetscapes.

- The arterial and collector streets shall be landscaped with drought tolerant trees and various plant materials.

- A recommended plant palette has been provided.

- A specific decomposed granite color and size (not to exceed 3/4" minus) shall be specified for the arterial and collector streets to create uniformity. Decomposed granite colors should be consistent throughout the community.

- All landscaped common areas shall be provided with a low water use irrigation system, and shall be properly maintained.

- Landscaping plans shall be subject to approval by the Community Development Director.

- Landscaping for individual residents shall follow the requirements for single family developments as outlined in the City of Surprise Title 17 Zoning Code 17.32.030 (see Section 11).

Circulation Pattern and Street Standards

- 6-foot wide meandering sidewalks shall be provided in the arterial half-street right-of-ways.

- 6-foot wide straight, detached sidewalks shall be provided on both sides of the collector streets.

Signage

- General commercial billboards shall be prohibited.
- Builder signs, in accordance with this plan and City of Surprise ordinances, shall be permitted.

- All signs shall conform to the City of Surprise Title 15 code 15.24 requirements and the Master Sign Program.

Miscellaneous Other Site Development Design Guidelines

- All stored items, including boats and recreational vehicles, must be screened behind a 6' wall and cannot be visible from the street or neighboring property.
- All waste containers must be screened from the street and neighboring property, or stored in garages.
- Permanent on-street parking shall not be permitted.

Architectural Design

A variety of housing products will be offered within Rancho Gabriela. Each homebuilder will offer five (5) different floor plans with three (3) elevations per floor plan. Five (5) exterior color combinations will also be offered. The housing products for both the R1-5 and R-2 zoned areas will adhere to the architectural guidelines as detailed below. All housing products shall adhere to a consistent theme yet establish different characteristics. This housing product diversity, together with curvilinear streets and staggered front setbacks, is intended to create an attractive neighborhood streetscape in the Rancho Gabriela community.

Masonry and stucco exteriors will be provided. Stone and brick may be used as accent material. Architectural design features, such as pop-outs, shutters and wrought iron detail, will be incorporated into each elevation.

Sloped and flat roofs may be utilized. Sloped roofs will be constructed of concrete tile. A minimum of three (3) complementary roof tile colors will be offered with each series. The style of concrete tile may be curved or flat. The same type and style of concrete tile will be used throughout each individual neighborhood.

Other architectural design features include ground mounted mechanical equipment to be screened from the street and painted vent pipes and flashing to match the roof tile.

It is important to note that any successful builder will continue to modify its product to meet the changing needs of the homebuyer and the changing dynamics of the marketplace.

Housing Landscaping Requirements

Each resident will be required to landscape his or her front yard no later than ninety (90) days after issuance of a Certificate of Occupancy in the R1-5 subdivisions. In the R-2 subdivisions, all front yard landscaping will be installed and professionally maintained by the homeowners association.

The Rancho Gabriela Community Association, through the Residential Design Review Committee, will provide an approved plant material list for the residents using the plant species listed on the Conceptual Plant Palette (*Exhibit P–"Conceptual Plant Palette"*). Five (5) decomposed granite colors and sizes will also be specified.

The implementation of the Architectural and Housing Landscaping Requirements comply with general Surprise Development Guide Policies of providing quality housing, and a variety of housing types and sizes for all income levels.

Architectural Design Guidelines

Housing Product

- Five (5) different floor plans shall be offered by each builder.
- Three (3) elevations shall be offered with each floor plan.

Exterior Colors

- Five (5) exterior color combinations shall be offered.
- Colors shall be used to create visual harmony within Rancho Gabriela.

Exterior Materials

- Masonry and stucco exterior finishes shall be provided.
- Stone and brick may be used as accent materials.
- Wood and exterior architectural plywood shall not be allowed, unless approved by the City of Surprise and the Residential Design Review Committee ("RDRC").

Architectural Design Features

- Architectural design features, such as pop-outs, shutters, and wrought iron detail, shall be incorporated into each elevation.

Roof Materials

- Sloped and flat roofs may be utilized. Sloped roofs shall be constructed of concrete tile.

- The same type and style of tile shall be used throughout each individual neighborhood. Different tile styles such as curved and flat may be utilized.

- A minimum of three (3) complementary roof tile colors shall be offered with each series.

Ground Mounted Mechanical Equipment

- All mechanical equipment shall be ground mounted and screened from the street.

- Solar panels shall not be permitted unless approved by the RDRC. Any approved solar panel shall blend with the existing roof.

Roof Vent Pipes

- All vent pipes extending through a roof shall be painted to match the roof tile.

- All flashing shall also be painted to match the roof tile.

Housing Landscaping Guidelines

- Each resident shall be required to landscape his or her front yard no later than ninety (90) days after issuance of a Certificate of Occupancy in the R1-5 subdivisions.

- In the R-2 subdivisions, the front yard landscaping will be installed and professionally maintained by the homeowners association.

- Each resident shall be required to plant a minimum of two (2) trees in the front yard–one (1) 24" box tree and one (1) 15 gallon tree in the R1-5 subdivisions.

- An approved plant material list for the residents shall be provided using the plant species listed on the Conceptual Plant Palette (*Exhibit P– "Conceptual Plant Palette"*).

- Five (5) decomposed granite colors and sizes shall also be specified. Granite color shall be consistent throughout the community.

Engineering Documents and Exhibits

The following exhibits contain the technical engineering information for Rancho Gabriela. The information is presented in accordance with the following stated Surprise Development Guide Policies:

- Policy A-1a, A-1b and A-1c, addressing the extension and installation of public utilities and facilities;

- Policy F-2a, stating that the City shall require the use of public sewer systems in all new development to minimize the potential for groundwater contamination;

- Policy I-1c, stating that the City shall work with private developers to insure that the new street system segments are constructed on an orderly basis in conjunction with new development;

- Policy I-1d, which encourages creative neighborhood street design in every new subdivision that will service localized traffic and foster neighborhood integrity, while discouraging cut through traffic;

- Policy L-1/2/3a, requiring developers to install all public utilities and facilities to State and municipal standards, as required by their proposed development projects.

DAVID EVANS AND ASSOCIATES, INC.

7878 N. 16th Street
Suite 250
Phoenix, Arizona 85020
Tel: 602.678.5151
Fax: 602.678.5155

TELECOPY TRANSMITTAL

TO:	Bob Speirs	FAX NO:	(480) 607-5801
		PHONE NO:	(480) 607-5800
FIRM:	Stardust Development	# OF PAGES:	3
FROM:	Greg Barry	PROJ. #:	STAR0076
DATE:	June 22, 2000	REGARDING:	RANCHO GABRIELA

COPIES: FAX NO:

ORIGINAL TO FOLLOW: REGULAR MAIL OVERNIGHT MAIL COURIER N/A

COMMENTS:

Bob:

Water:

Based on the revised plat I have calculated new well pumping, storage reservoir and booster pumping requirements. The amount of well pumping required is now 2,900-gpm based on the reduction of single family residential and inclusion of the 164-acre of industrial use. This is a reduction of 850-gpm from the City of Surprise's previous 3,000 gpm per section requirement. It is highly probable that the 2,900-gpm pumping requirement can be met by two wells, and the well shown on the attached Exhibit C at Reems and Bullard may not be required.

I estimate that 1.6 million-gallons of storage is required, this decreased from the 1.8 million-gallons as described in RBF American's *Master Water Report*, dated October 6, 1998. I have also estimated the Phase I and Ultimate booster pump requirements for the Rancho Gabriela development which are shown on page 3.

The attached Exhibit C shows the revised plat with the 164-acre industrial parcel. The infrastructure shown on this exhibit represents previous requirements for the Rancho Gabriela development from March, 2000 without an industrial parcel. The water and sewer infrastructure required for the developments with industrial parcels may change significantly. Since the industrial parcel was added to the Rancho Gabriela, it is likely that the City will impose industrial parcels on the Mountain Gate and possibly the Sage Developments. The industrial parcel will change overall water demand and sewage generation by 22-percent based on a 4 DU/ac residential and industrial generation of 1,280 gpd/ac and 1,000 gpd/ac, respectively. Due to this decrease in demand and generation the City may change the requirements for the size of waterlines and sewer lines between Cactus and Peoria Roads that will serve the new developments.

Sewer:

Based on the new plat, and the conceptual sewer alignment, the stand alone sewer to serve only Rancho Gabriela has changed. An 8-inch sewer may be required from Reems east to the mid-section line along Peoria. A 12-inch sewer may be required east of the mid-section line to Bullard, then a 15-inch sewer may be required all the way to the Treatment Plant. The exhibit on Page 4 shows the stand alone sewer requirements if the sewer line is to remain in Peoria Road. Again, due to the addition of the industrial parcel to the Rancho Gabriela development, and other potential developments, the City may change the requirements for the size of sewer lines between Cactus and Peoria Roads that will serve the new developments. In addition, a temporary lift station which temporarily serves the southwest portion of the Rancho Gabriela development may be a cost effective option.

The attached Exhibit E shows the revised plat with the industrial parcel included; however, the sewer line sizes shown on the exhibit may change significantly based on the reduction of sewage generation due to the Rancho Gabriela industrial parcel and other potential industrial parcels in the proposed developments between Cactus and Peoria Roads.

The City should investigate the new water and sewer infrastructure requirements in detail based on the addition of industrial parcels to the proposed development areas between Cactus and Peoria Roads.

If you have any questions or if you require additional information please call me at (602) 674-2059.

Sincerely,

Greg Barry, P.E.

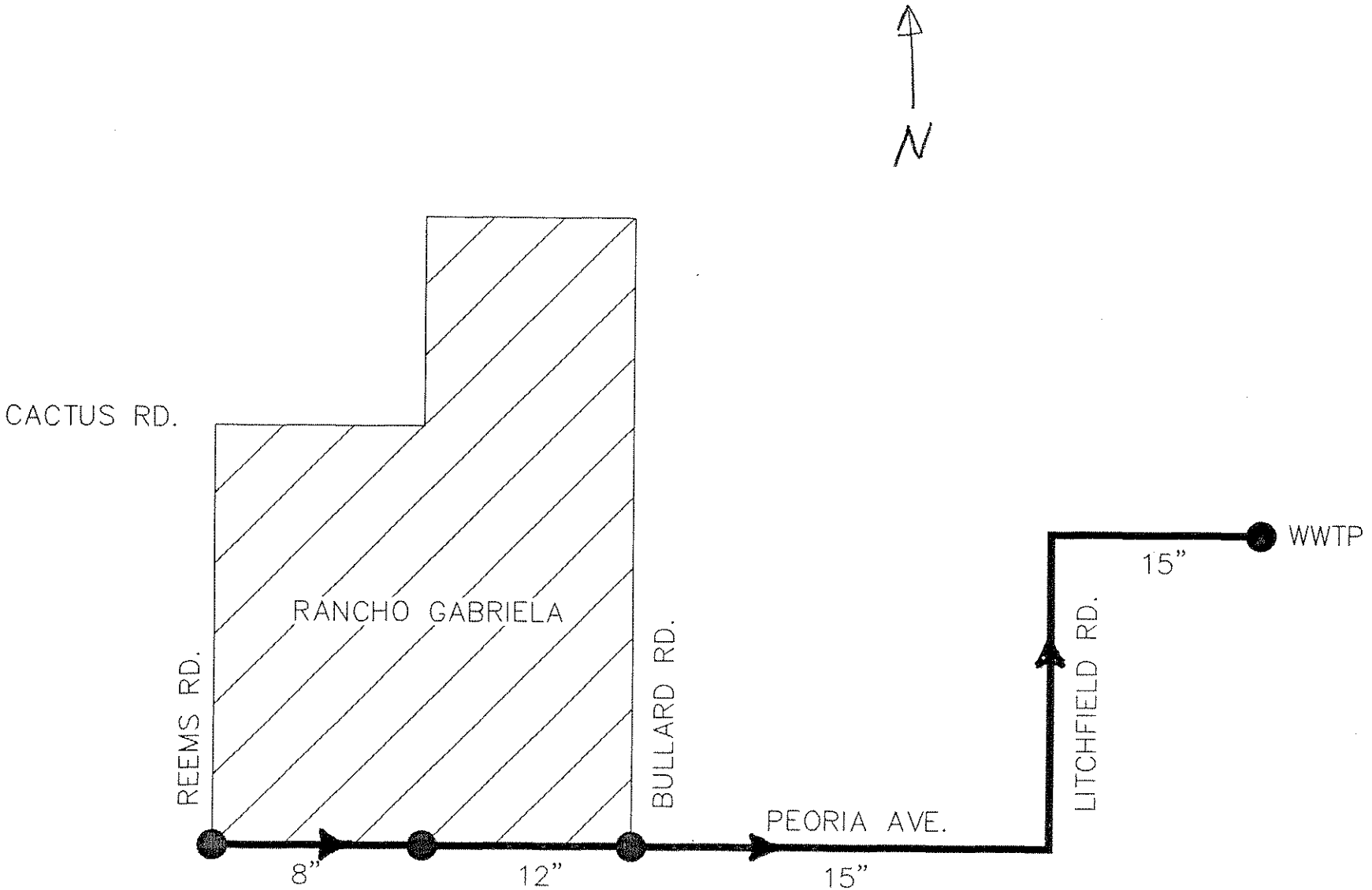

RANCHO GABRIELA
OFFSITE SEWER IMPROVEMENTS

EXHIBIT E
RANCHO GABRIELA
MASTER SEWER PLAN

0 500 1000 2000
SCALE: 1"=1000

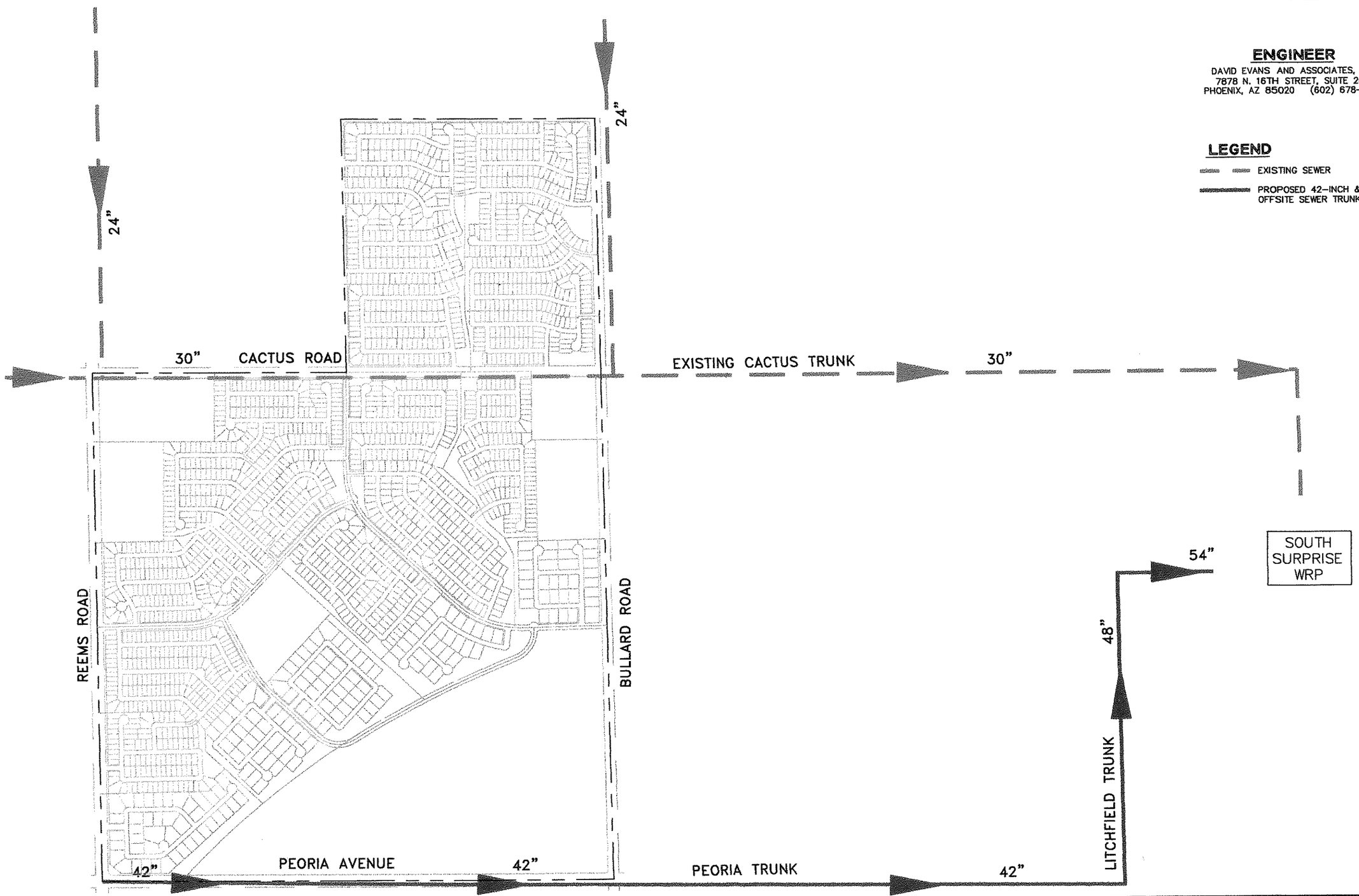

ENGINEER

DAVID EVANS AND ASSOCIATES, INC
7878 N. 16TH STREET, SUITE 205
PHOENIX, AZ 85020 (602) 678-5151

LEGEND

EXISTING SEWER

PROPOSED 42-INCH & 48-INCH OFFSITE SEWER TRUNK LINES

DATE	REVISION
01/27/00	PER CITY OF SURPRISE COMMENTS
06/21/00	REVISED LOT LAYOUT

DESIGN BY:
CHECKED BY:
DATE: 06/21/00

DAVID EVANS AND ASSOCIATES, INC.
7878 N. 16TH STREET, STE. #205
PHOENIX, AZ 85020-4495 (602) 678-5151

EXHIBIT E
STARDUST DEVELOPMENT
CONCEPTUAL SEWER EXHIBIT

SCALE: 1"=1000'
SECTION: 17,20
TWNSHP: 3N
RANGE: 1W
SHEET 1 OF 1
JOB NO.: STAR0076

263-1100

STAR0076 rdr 06/21/00 07:37:31 wdr P:\STAR0076\EXHIBIT\Exhi_w_a.dwg

DAVID EVANS AND ASSOCIATES, INC.

7878 N. 16th Street
Suite 250
Phoenix, Arizona 85020
Tel: 602.678.5151
Fax: 602.678.5155

TELECOPY TRANSMITTAL

TO:	Bob Speirs	FAX NO:	(480) 607-5801
		PHONE NO:	(480) 607-5800
FIRM:	Stardust Development	# OF PAGES:	3
FROM:	Greg Barry	PROJ. #:	STAR0076
DATE:	June 22, 2000	REGARDING:	RANCHO GABRIELA

COPIES: FAX NO:

ORIGINAL TO FOLLOW: REGULAR MAIL OVERNIGHT MAIL COURIER N/A

COMMENTS:

Bob:

Water:

Based on the revised plat I have calculated new well pumping, storage reservoir and booster pumping requirements. The amount of well pumping required is now 2,900-gpm based on the reduction of single family residential and inclusion of the 164-acre of industrial use. This is a reduction of 850-gpm from the City of Surprise's previous 3,000 gpm per section requirement. It is highly probable that the 2,900-gpm pumping requirement can be met by two wells, and the well shown on the attached Exhibit C at Reems and Bullard may not be required.

I estimate that 1.6 million-gallons of storage is required, this decreased from the 1.8 million-gallons as described in RBF American's *Master Water Report*, dated October 6, 1998. I have also estimated the Phase I and Ultimate booster pump requirements for the Rancho Gabriela development which are shown on page 3.

The attached Exhibit C shows the revised plat with the 164-acre industrial parcel. The infrastructure shown on this exhibit represents previous requirements for the Rancho Gabriela development from March, 2000 without an industrial parcel. The water and sewer infrastructure required for the developments with industrial parcels may change significantly. Since the industrial parcel was added to the Rancho Gabriela, it is likely that the City will impose industrial parcels on the Mountain Gate and possibly the Sage Developments. The industrial parcel will change overall water demand and sewage generation by 22-percent based on a 4 DU/ac residential and industrial generation of 1,280 gpd/ac and 1,000 gpd/ac, respectively. Due to this decrease in demand and generation the City may change the requirements for the size of waterlines and sewer lines between Cactus and Peoria Roads that will serve the new developments.

Sewer:

Based on the new plat, and the conceptual sewer alignment, the stand alone sewer to serve only Rancho Gabriela has changed. An 8-inch sewer may be required from Reems east to the mid-section line along Peoria. A 12-inch sewer may be required east of the mid-section line to Bullard, then a 15-inch sewer may be required all the way to the Treatment Plant. The exhibit on Page 4 shows the stand alone sewer requirements if the sewer line is to remain in Peoria Road. Again, due to the addition of the industrial parcel to the Rancho Gabriela development, and other potential developments, the City may change the requirements for the size of sewer lines between Cactus and Peoria Roads that will serve the new developments. In addition, a temporary lift station which temporarily serves the southwest portion of the Rancho Gabriela development may be a cost effective option.

The attached Exhibit E shows the revised plat with the industrial parcel included; however, the sewer line sizes shown on the exhibit may change significantly based on the reduction of sewage generation due to the Rancho Gabriela industrial parcel and other potential industrial parcels in the proposed developments between Cactus and Peoria Roads.

The City should investigate the new water and sewer infrastructure requirements in detail based on the addition of industrial parcels to the proposed development areas between Cactus and Peoria Roads.

If you have any questions or if you require additional information please call me at (602) 674-2059.

Sincerely,

Greg Barry, P.E.

Max daily consumption	4,208,869	gal
20% =	841,774	gal
Fire Flow (3000 gpm for 3 hrs)	540,000	gal
Emergency Storage (5%)	210,443	gal
TOTAL	**1,592,217**	**gal**

Well Pumping = peak hour demand
2923 gpm

ASSUMPTIONS:

Ave. day demand	120 gpdc
Max. day demand	264 gpdc
Peak hour demand	456 gpdc
Persons/DU (SF)	3.2
Persons/DU (MF)	2
School Children	1208

BOOSTER PUMPING REQUIREMENTS

PHASE I FIRM PUMP REQUIREMENTS

Pump No.		Capacity	
1	50%	196	gpm
2	150%	587	gpm
3	FF	1000	gpm
4	B/U	1000	gpm

ULTIMATE FIRM PUMP REQUIREMENTS

Pump No.		Capacity	
1	50%	846	gpm
2	150%	2538	gpm
3	FF	3000	gpm
4	B/U	3000	gpm

1) The 12-inch waterline is installed from Waddell south to Phase I along the north-south midsection line of Section 17.

   The Litchfield/Cactus Booster station is constructed with a 1.2 million-gallon reservoir for Phase II and the raw water (connecting) lines are installed. The booster station reaches its ultimate capacity (1.7 mgal) sometime before ultimate buildout of the development.

2) The 12-inch waterline is installed from Waddell south to Phase I along the north-south midsection line of Section 17 <u>and</u> one well Phase I is operational and is connected to temporary hydropneumatic tank(s) and directly into the Phase I distribution system. No storage reservoir is constructed.

   The Litchfield/Cactus Booster station is constructed with a 1.2 million-gallon reservoir for Phase II and the raw water (connecting) lines are installed. The booster station reaches its ultimate capacity (1.7 mgal) sometime before ultimate buildout of the development.

3) The 12-inch waterline is installed from Waddell south to Phase I along the north-south midsection line of Section 17. One well is operational and a temporary booster station (skid mounted) and temporary storage reservoir (bolted steel or several hydropneumatic tanks) are located south of Cactus and are connected to the Phase I distribution system.

   The Litchfield/Cactus Booster station is constructed with a 1.2 million-gallon reservoir for Phase II and the raw water (connecting) lines are installed. The booster station then reaches its ultimate capacity (1.7 mgal) sometime before ultimate buildout of the development.

EXHIBIT C
RANCHO GABRIELA
MASTER WATER PLAN

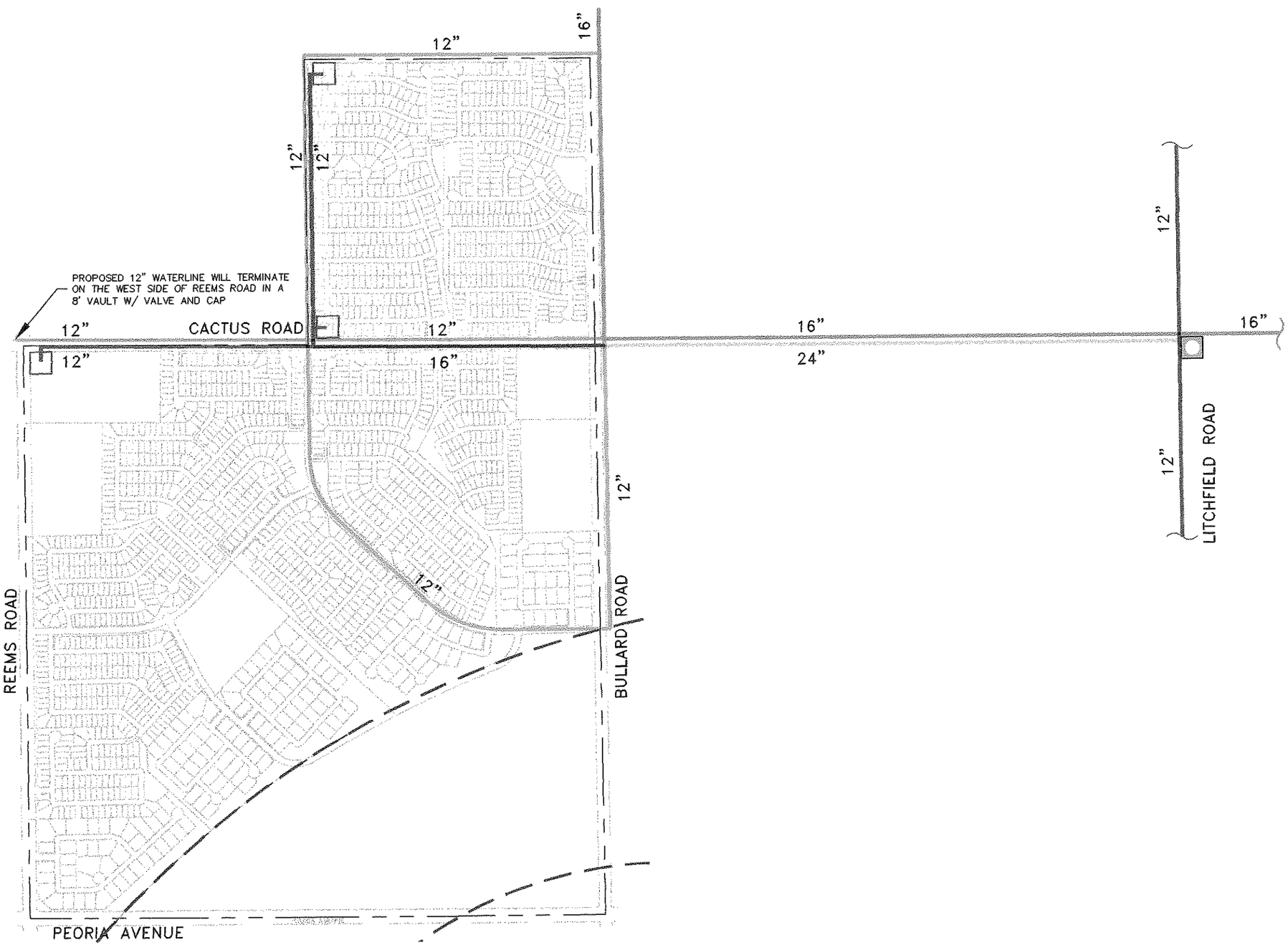

0 500 1000 2000

SCALE: 1"=1000

ENGINEER

DAVID EVANS AND ASSOCIATES, INC
7878 N. 16TH STREET, SUITE 205
PHOENIX, AZ 85020 (602) 678-5151

LEGEND

- PROPOSED 12-INCH WATER
- CITY 16-INCH WATERLINE
- 12-INCH WATER BY OTHERS
- 24-INCH CONNECTING WATERLINE
- 16-INCH CONNECTING WATERLINE
- 12-INCH CONNECTING WATERLINE
- PROPOSED OFF-SITE STORAGE TANK
- PROPOSED WELL SITE (104' X 104')

NOTE: ALL 12"-24" DEVELOPER INSTALLED WATERLINES WILL BE DUCTILE IRON

DATE	REVISION
01/27/00	PER CITY OF SURPRISE COMMENTS
03/16/00	FOR DEVELOPMENT AGREEMENT
6/19/00	NEW PLAT

DESIGN BY:
CHECKED BY:
DATE: 6/19/00

DAVID EVANS AND ASSOCIATES, INC.
7878 N. 16TH STREET, STE. #250
PHOENIX, AZ. 85020-4403 (602) 678-5151

EXHIBIT C
STARDUST DEVELOPMENT
CONCEPTUAL WATER EXHIBIT

SCALE: 1"=1000'
SECTION: 17,20
TWNSHP: 3N
RANGE: 1W
SHEET 1 OF 1
JOB NO.: STAR0076

CALL TWO WORKING DAYS BEFORE YOU DIG 263-1100 BLUE STAKE CENTER

STAR0076 mjlu 0F ^^/00 12:58:44 mjlu P:\STAR0076\EXHIBIT\Exhi_w_s.dwg

DAVID EVANS AND ASSOCIATES, INC.

7878 North 16th Street
Suite 250
Phoenix, Arizona 85020
Tel: 602.678.5151
Fax: 602.678.5155

DATE: June 21, 2000

TO: Bob Spears
Stardust Development, Inc.

FROM: Thomas A. Grace, E.I.T.
David George, P.E.

SUBJECT: Rancho Gabriela

Rancho Gabriela is a proposed 800-acre mixed-use development located in the City of Surprise at Cactus Rd and Bullard Av. Proposed uses include single-family residential, light industrial, multi-family residential and commercial. The current proposed development plan calls for the 160 acre portion, located north of Cactus Rd, to be single-family residential and the 640 acre portion, located south of Cactus Rd, to consist of single and multi-family residential, light industrial and commercial. A possible school site is also located within the 640-acre portion of the site.

The site currently slopes to the southeast with the ultimate outfall of the site being the Northwest corner of Peoria Av and Bullard Av. The current land use of the site is agricultural in the form of crop production.

RBF/American Engineering Company prepared a Master Drainage Report for Rancho Gabriela; this report is dated September 9, 1998. The RBF/American report addressed off-site drainage; on-site flow routing and retention requirements. The new site plan does not alter the findings of the RBF/American report in regard to the off-site drainage or on-site flow. Retention requirements however, are effected by the new site plan and new required retention volume estimates are needed.

The following is a summary of the retention requirements for each Phase and Tract within the development. These estimates have been prepared based on current City of Surprise standards and guidelines.

Summary of Retention for Each Phase

Phase	Contributing Parcels	Retention Required (acre-ft)
1	1, 2, 3, 4, 5, & 6	25.09
2	7, 8, 9 & 12	23.84
3	14, 15, 16 & 18	16.13
4	19, 20, 21, 22, 23, 24 & 25	27.87

Summary of Retention for Each Tract

Tract	Retention Required (acre-ft)
1	2.61
2	3.62
3	4.53
4	3.74
5	3.51
6 & 7	35.92

Tracts will provide retention basins to store 100 percent of the required volume generated from that Tract. It may be necessary to increase the retention volume provided in some Phases, to compensate for a shortage of volume provided in other Phases. The total retention required volume for all Phases would be provided within the Phases and Tracts of the Rancho Gabriela development.

The required retention will be provided in various retention basins throughout the project site. The retention basins will be designed to contain the volume generated in the 100-year, 2-hour storm event and will have maximum side slopes of 4:1 and a maximum depth of retained water of three feet.

Should you have additional questions regarding this site, please contact me at (602) 678-5151.

s:\drn\star0076\corres\fld_ltr.doc
STAR0076

RETENTION BASIN CALCULATIONS

V = C'(P/12)*A P = 2.7"

PHASE 1

CONTRIBUTING PARCELS 1, 2, 3, 4, 5 AND 6

Parcel 1

Type	Area (Ac)	C' Coefficient	Depth (ft)	Retention Required (AF)	
Landscaped*	-	0.31	0.23	-	
Residential	37.46	0.70	0.23	6.03	
Roadway	2.79	0.95	0.23	0.61	
Total	40.25			6.64	Required

(*Landscaped area included in total calculations shown below.)

Parcel 2

Type	Area (Ac)	C' Coefficient	Depth (ft)	Retention Required (AF)	
Landscaped*	-	0.31	0.23	-	
Residential	17.00	0.70	0.23	2.74	
Roadway	0.83	0.95	0.23	0.18	
Total	17.83			2.92	Required

(*Landscaped area included in total calculations shown below.)

Parcel 3

Type	Area (Ac)	C' Coefficient	Depth (ft)	Retention Required (AF)	
Landscaped*	-	0.31	0.23	-	
Residential	13.78	0.70	0.23	2.22	
Roadway	2.15	0.95	0.23	0.47	
Total	15.93			2.69	Required

(*Landscaped area included in total calculations shown below.)

Parcel 4

Type	Area (Ac)	C' Coefficient	Depth (ft)	Retention Required (AF)	
Landscaped*	-	0.31	0.23	-	
Residential	23.08	0.70	0.23	3.72	
Roadway	2.27	0.95	0.23	0.50	
Total	25.35			4.21	Required

(*Landscaped area included in total calculations shown below.)

Parcel 5

Type	Area (Ac)	C' Coefficient	Depth (ft)	Retention Required (AF)	
Landscaped*	-	0.31	0.23	-	
Residential	28.68	0.70	0.23	4.62	
Roadway	0.77	0.95	0.23	0.17	
Total	29.45			4.79	Required

(*Landscaped area included in total calculations shown below.)

Parcel 6

Type	Area (Ac)	C' Coefficient	Depth (ft)	Retention Required (AF)	
Landscaped*	-	0.31	0.23	-	
Residential	17.47	0.70	0.23	2.81	
Roadway	1.65	0.95	0.23	0.36	
Total	19.12			3.17	Required

(*Landscaped area included in total calculations shown below.)

TOTALS

Type	Area (Ac)	C' Coefficient	Depth (ft)	Retention Required (AF)	
Landscaped	9.42	0.31	0.23	0.67	
Residential	137.47	0.70	0.23	22.13	
Roadway	10.46	0.95	0.23	2.29	
	157.35			25.09	Required

PHASE 2
CONTRIBUTING PARCELS 7, 8, 9 AND 12

Parcel 7

Type	Area (Ac)	C' Coefficient	Depth (ft)	Retention Required (AF)	
Landscaped*	-	0.31	0.23	-	
Residential	23.42	0.70	0.23	3.77	
Roadway	0.97	0.95	0.23	0.21	
Total	24.39			3.98	Required

(*Landscaped area included in total calculations shown below.)

Parcel 8

Type	Area (Ac)	C' Coefficient	Depth (ft)	Retention Required (AF)	
Landscaped*	-	0.31	0.23	-	
Residential	21.54	0.70	0.23	3.47	
Roadway	2.19	0.95	0.23	0.48	
Total	23.73			3.95	Required

(*Landscaped area included in total calculations shown below.)

Parcel 9

Type	Area (Ac)	C' Coefficient	Depth (ft)	Retention Required (AF)	
Landscaped*	-	0.31	0.23	-	
Residential	31.79	0.70	0.23	5.12	
Roadway	1.86	0.95	0.23	0.41	
Total	33.65			5.52	Required

(*Landscaped area included in total calculations shown below.)

Parcel 12

Type	Area (Ac)	C' Coefficient	Depth (ft)	Retention Required (AF)	
Landscaped*	-	0.31	0.23	-	
Residential	16.11	0.70	0.23	2.59	
Roadway	1.74	0.95	0.23	0.38	
Total	17.85			2.97	Required

(*Landscaped area included in total calculations shown below.)

TOTALS

Type	Area (Ac)	C' Coefficient	Depth (ft)	Retention Required (AF)	
Landscaped	12.29	0.31	0.23	0.88	
Residential	76.75	0.70	0.23	12.36	
Roadway	48.56	0.95	0.23	10.61	
	137.60			23.84	Required

PHASE 3
CONTRIBUTING PARCELS 14, 15, 16 AND 18

Parcel 14

Type	Area (Ac)	C' Coefficient	Depth (ft)	Retention Required (AF)	
Landscaped*	-	0.31	0.23	-	
Residential	22.31	0.70	0.23	3.59	
Roadway	2.25	0.95	0.23	0.49	
Total	24.56			4.08	Required

(*Landscaped area included in total calculations shown below.)

Parcel 15

CONTRIBUTING DRAINAGE AREAS

Type	Area (Ac)	C' Coefficient	Depth (ft)	Retention Required (AF)	
Landscaped*	-	0.31	0.23	-	
Residential	11.70	0.70	0.23	1.88	
Roadway	0.97	0.95	0.23	0.21	
Total	12.67			2.10	Required

(*Landscaped area included in total calculations shown below.)

Parcel 16

Type	Area (Ac)	C' Coefficient	Depth (ft)	Retention Required (AF)	
Landscaped*	-	0.31	0.23	-	
Residential	27.05	0.70	0.23	4.36	
Roadway	0.13	0.95	0.23	0.03	
Total	27.18			4.38	Required

(*Landscaped area included in total calculations shown below.)

Parcel 18

Type	Area (Ac)	C' Coefficient	Depth (ft)	Retention Required (AF)	
Landscaped*	-	0.31	0.23	-	
Residential	27.46	0.70	0.23	4.42	
Roadway	2.70	0.95	0.23	0.59	
Total	30.16			5.01	Required

(*Landscaped area included in total calculations shown below.)

TOTALS

Type	Area (Ac)	C' Coefficient	Depth (ft)	Retention Required (AF)	
Landscaped	7.83	0.31	0.23	0.56	
Residential	88.52	0.70	0.23	14.25	
Roadway	6.05	0.95	0.23	1.32	
	102.40			16.13	Required

PHASE 4
CONTRIBUTING PARCELS 19, 20, 21, 22, 23, 24 AND 25

Parcel 19

Type	Area (Ac)	C' Coefficient	Depth (ft)	Retention Required (AF)	
Landscaped*	-	0.31	0.23	-	
Residential	27.41	0.70	0.23	4.41	
Roadway	1.62	0.95	0.23	0.35	
Total	29.03			4.77	Required

(*Landscaped area included in total calculations shown below.)

Parcel 20

Type	Area (Ac)	C' Coefficient	Depth (ft)	Retention Required (AF)	
Landscaped*	-	0.31	0.23	-	
Residential	12.88	0.70	0.23	2.07	
Roadway	1.71	0.95	0.23	0.37	
Total	14.59			2.45	Required

(*Landscaped area included in total calculations shown below.)

Parcel 21

Type	Area (Ac)	C' Coefficient	Depth (ft)	Retention Required (AF)	
Landscaped*	-	0.31	0.23	-	
Residential	19.96	0.70	0.23	3.21	
Roadway	1.41	0.95	0.23	0.31	
Total	21.37			3.52	Required

(*Landscaped area included in total calculations shown below.)

Parcel 22

Type	Area (Ac)	C' Coefficient	Depth (ft)	Retention Required (AF)	
Landscaped*	-	0.31	0.23	-	
Residential	16.42	0.70	0.23	2.64	
Roadway	0.79	0.95	0.23	0.17	
Total	17.21			2.82	Required

(*Landscaped area included in total calculations shown below.)

Parcel 23

Type	Area (Ac)	C' Coefficient	Depth (ft)	Retention Required (AF)	
Landscaped*	*	0.31	0.23	-	
Residential	21.73	0.70	0.23	3.50	
Roadway	2.50	0.95	0.23	0.55	
Total	24.23			4.04	Required

(*Landscaped area included in total calculations shown below.)

Parcel 24

Type	Area (Ac)	C' Coefficient	Depth (ft)	Retention Required (AF)	
Landscaped*	-	0.31	0.23	-	
Residential	18.80	0.70	0.23	3.03	
Roadway	1.20	0.95	0.23	0.26	
Total	20.00			3.29	Required

(*Landscaped area included in total calculations shown below.)

Parcel 25

Type	Area (Ac)	C' Coefficient	Depth (ft)	Retention Required (AF)	
Landscaped*	-	0.31	0.23	-	
Residential	28.29	0.70	0.23	4.55	
Roadway	2.63	0.95	0.23	0.57	
Total	30.92			5.13	Required

(*Landscaped area included in total calculations shown below.)

TOTALS

Type	Area (Ac)	C' Coefficient	Depth (ft)	Retention Required (AF)	
Landscaped	26.01	0.31	0.23	1.85	
Residential	145.49	0.70	0.23	23.42	
Roadway	11.86	0.95	0.23	2.59	
	183.36			27.87	Required

TRACTS

Each tract will provide it's own retention.

Parcel 10 (TRACT 1)

Type	Area (Ac)	C' Coefficient	Depth (ft)	Retention Required (AF)	
Landscaped*	0.00	0.31	0.23	0.00	
Commercial	10.02	0.95	0.23	2.19	
Roadway	1.93	0.95	0.23	0.42	
Total	11.95			2.61	Required

Parcel 11 (TRACT 2)

Type	Area (Ac)	C' Coefficient	Depth (ft)	Retention Required (AF)	
Landscaped*	0.00	0.31	0.23	0.00	
Commercial	15.24	0.95	0.23	3.33	
Roadway	1.31	0.95	0.23	0.29	
Total	16.55			3.62	Required

Parcel 13 (TRACT 3)

Type	Area (Ac)	C' Coefficient	Depth (ft)	Retention Required (AF)	
Landscaped*	0.00	0.31	0.23	0.00	
Commercial	18.14	0.95	0.23	3.96	
Roadway	2.57	0.95	0.23	0.56	
Total	20.71			4.53	Required

Parcel 17 (TRACT 4)

Type	Area (Ac)	C' Coefficient	Depth (ft)	Retention Required (AF)	
Landscaped*	0.00	0.31	0.23	0.00	
Commercial	15.54	0.95	0.23	3.40	
Roadway	1.56	0.95	0.23	0.34	
Total	17.10			3.74	Required

Parcel 26 (TRACT 5)

Type	Area (Ac)	C' Coefficient	Depth (ft)	Retention Required (AF)	
Landscaped	0.00	0.31	0.23	0.00	
Commercial	14.96	0.95	0.23	3.27	
Roadway	1.10	0.95	0.23	0.24	
Total	16.06			3.51	Required

Parcel 27 (TRACT 6 & 7)

Type	Area (Ac)	C' Coefficient	Depth (ft)	Retention Required (AF)	
Landscaped	0.00	0.31	0.23	0.00	
Industrial	152.43	0.95	0.23	33.31	
Roadway	11.95	0.95	0.23	2.61	
Total	164.38			35.92	Required

TOTALS

Type	Area (Ac)	C' Coefficient	Depth (ft)	Retention Required (AF)	
Landscaped	0.00	0.31	0.23	0.00	
Commercial/Industrial	226.33	0.70	0.23	36.44	
Roadway	20.42	0.95	0.23	4.46	
	246.75			40.90	Required

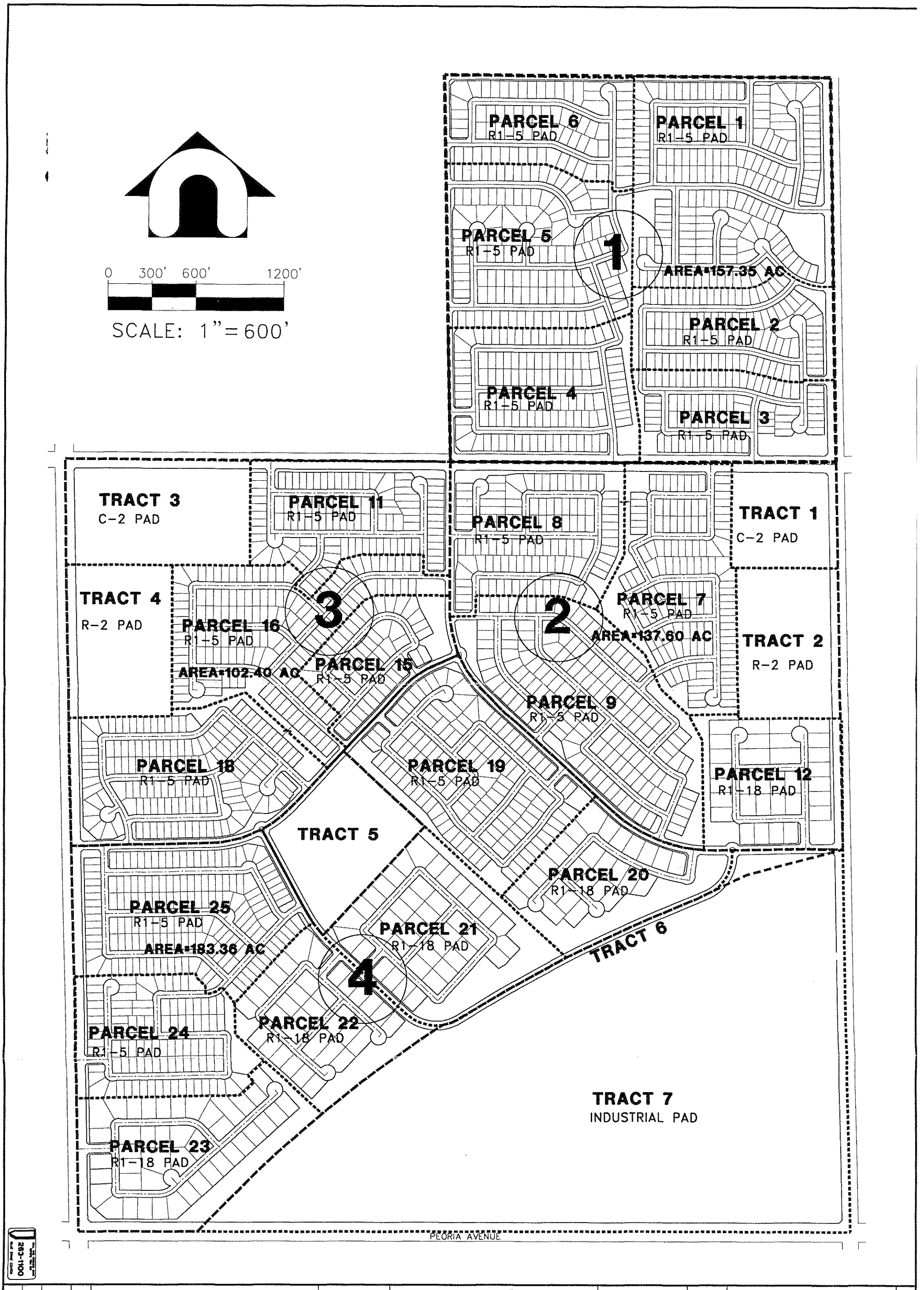

263-1100

JOB NO.: STAR0083	SHEET 1 OF 1	SECTION: 20 TWNSHP: 3N RANGE: 1W	SCALE: 1"=600XP	**EXHIBIT A CONCEPTUAL DRAINAGE EXHIBIT RANCHO GABRIELA CITY OF SURPRISE**	DAVID EVANS AND ASSOCIATES, INC. 7878 N. 16TH STREET, STE #250 PHOENIX, AZ. 85020-4458 (602) 678-5151	DESIGN BY: TAGR CHECKED BY: DATE: 06/20/00	DATE	REVISION	BY

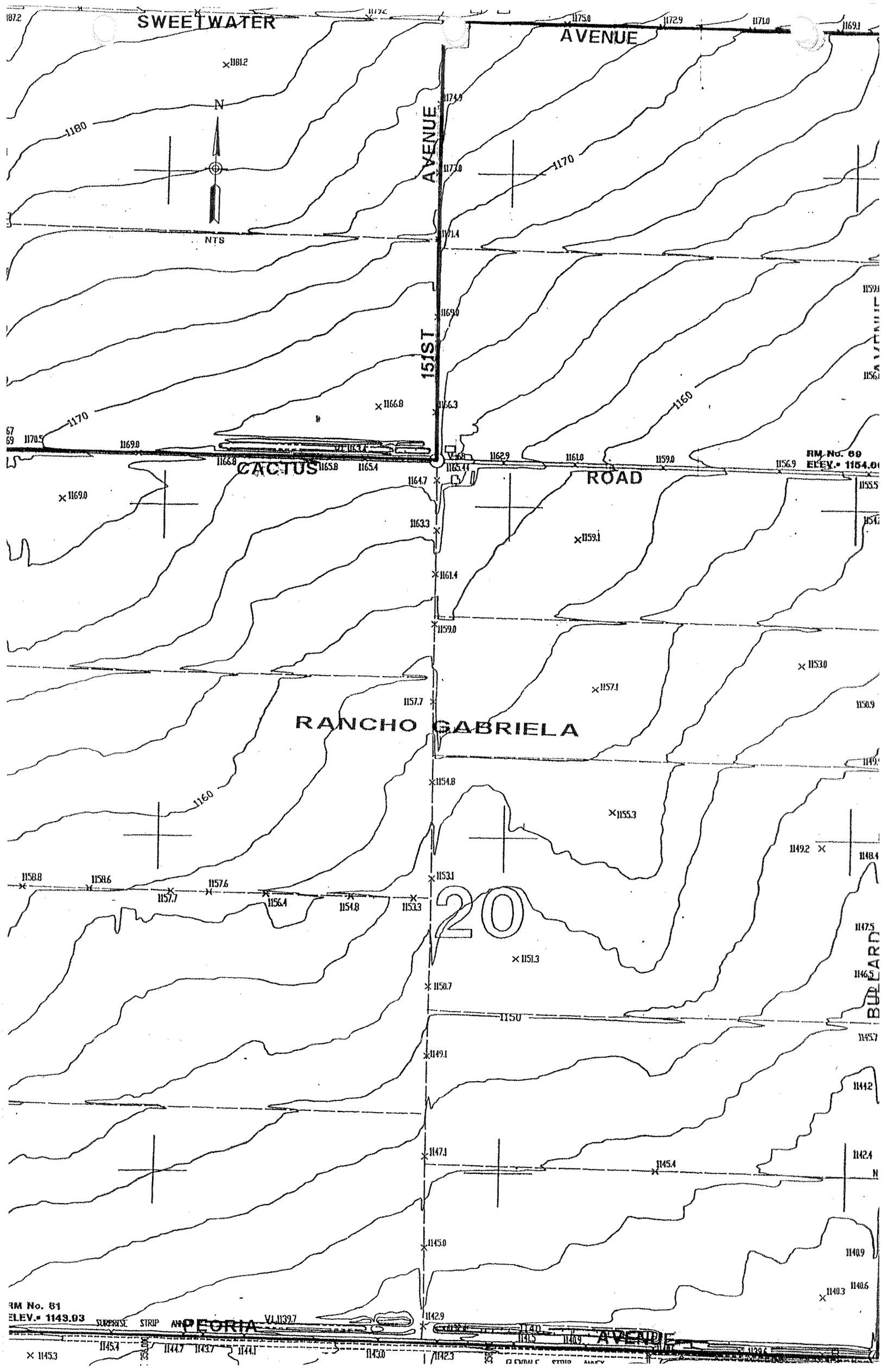
SWEETWATER
AVENUE
N
NTS
151ST
AVENUE
CACTUS
ROAD
RM No. 69
ELEV.= 1154.0
RANCHO GABRIELA
20
BUCKEYE
RM No. 81
ELEV.= 1143.03
PEORIA
AVENUE

Kimley-Horn
and Associates, Inc.

June 20, 2000

Suite 250
7600 N. 15th Street
Phoenix, Arizona
85020

Mr. Bob Speirs
Stardust Development, Inc.
6730 N Scottsdale Road, Suite 230
Scottsdale, AZ 85253

Re: Trip Generation Comparison for Rancho Gabriela at Cactus Road and Bullard Avenue – Surprise, Arizona

Dear Mr. Speirs:

The following analysis is a comparison of the trip generation potential of two scenarios for the southeast section of the development at the aforementioned location. The first scenario in the comparison is the 479 single-family dwelling units and 8 acres of shopping center under the existing proposal. The second scenario, under the proposed change to the site plan, is 164 acres of light industrial land use.

As a basis of comparison, it was assumed that the shopping center would have a gross floor area of 87,120 square feet (based on a site FAR of 0.25 applied to the shopping center use). The institute of Transportation Engineer's (ITE) Trip Generation 6th Edition was used to estimate the trip generation potential of the proposed land uses. These calculations were based upon Land Use Code 210 (Single-Family Detached Housing), Land Use Code 820 (Shopping Center), and Land Use Code 110 (General Light Industrial). The results of the calculations are shown in Tables 1 and 2.

Table 1 Original Trip Generation

			Daily	AM Peak			PM Peak		
Land Use	Intensity	Units	Total	In	Out	Total	In	Out	Total
Single-Family Detached Housing	479	DU	4,381	86	259	345	282	158	440
Shopping Center	87,120	SF	6,238	90	57	147	275	298	573
Total			10,619	176	316	492	557	456	1,013

Single-Family Detached Housing (ITE 6th Edition)

Daily (ITE 210)	Ln(T) = 0.920 x Ln(number of DU's) + 2.707	50% In	50% Out
AM Peak Hour (ITE 210)	T = 0.700 x (number of DU's) + 9.477	25% In	75% Out
PM Peak Hour (ITE 210)	Ln(T) = 0.901 x Ln(number of DU's) +0.527	64% In	36% Out

Shopping Center (ITE 6th Edition)

Daily (ITE 820)	Ln(T) = 0.643 x Ln(1000's of SF) + 5.866	50% In	50% Out
AM Peak Hour (ITE 820)	Ln(T) = 0.596 x Ln(1000's of SF) + 2.329	61% In	39% Out
PM Peak Hour (ITE 820)	Ln(T) = 0.660 x Ln(1000's of SF) + 3.403	48% In	52% Out

TEL 602 944 5500
FAX 602 944 7423

As shown in **Table 1**, a total of 10,619 daily trips are anticipated under the existing proposal, with 492 of these trips occurring in the AM peak hour and 1,013 occurring in the PM peak hour.

The results of the calculations for the currently proposed land use are shown in **Table 2**.

Table 2 Proposed Trip Generation

			Daily	AM Peak			PM Peak		
Land Use	Intensity	Units	Total	In	Out	Total	In	Out	Total
General Light Industrial	164	Acres	7,188	1,023	209	1,232	158	562	720

General Light Industrial (ITE 6th Edition)

Daily (ITE 110)	T = 42.223 x (Number of Acres) + 263.112	50% In	50% Out
AM Peak Hour (ITE 110)	T = 7.51 x (Number of Acres)	83% In	17% Out
PM Peak Hour (ITE 110)	T = 3.678 x (Number of Acres) + 116.823	22% In	78% Out

The proposed use on the 164-acre site is expected to generate 7,188 trips per day, with 1,232 occurring in the AM peak and 720 of them occurring in the PM peak.

As show in **Table 3,** the daily trip generation for the 164 acre General Light Industrial land use is approximately 3,431 trips lower than the total daily trips generated by the original land uses shown. The AM Peak hour trips due to the General Light Industry land use will be 740 trips higher and the PM peak hour trips will be 293 trips lower than what the original Single-Family Detached Housing with Shopping Center land uses could potentially generate.

Table 3 Trip Generation Difference

Scenario	Daily	AM Peak	PM Peak
SFDU & Shopping Center	10,619	492	1,013
Proposed Light Industry	7,188	1,232	720
Trip Generation Difference	3,431	-740	293

In summary, the overall daily traffic impacts of the proposed 164 acre General Light Industry land use is almost 3,500 trips less than the number of trips generated under the existing proposal. Even though the AM peak hour trips due to the proposed General Light Industry are slightly higher than the trips due to the original Single-Family Detached Housing with Shopping Center, they will not add to the peak directional residential trips since the General Light Industry trips travel in the opposite direction. Therefore, the trips generated due to the General Light Industry land use should not impact the original recommendations in the *Rancho Gabriela at Cactus and Bullard* Traffic Impact Analysis.

If you have any further questions please feel free to contact me at (602)-944-5500.

Very truly yours,

KIMLEY-HORN AND ASSOCIATES, INC.

Charles R. Wright

Charles R. Wright, P.E.
Vice President

CRW/mhg

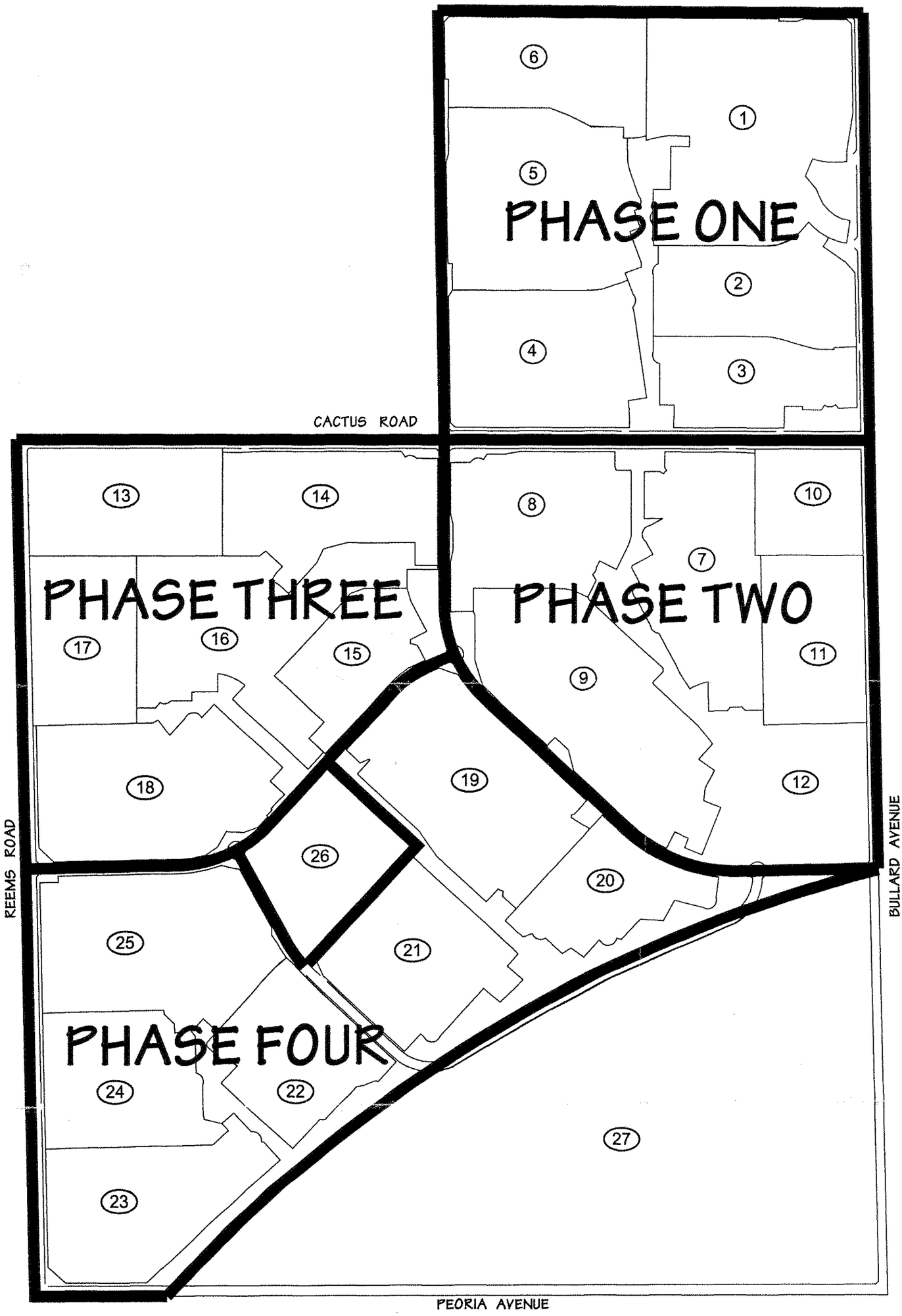

PHASING PLAN

RANCHO GABRIELA

N.T.S.
6.19.00
99029

LAND PLAN PREPARED BY: URBAN CONCEPTS
PREPARED FOR: STARDUST DEVELOPMENT

urban concepts
Planning & Urban Design
Landscape Architecture
P.O.Box 13918
Scottsdale, AZ 85267-3918
(480) 481-9244

f2 GROUP
Landscape Design • Irrigation Systems
Native Plant Analysis • Urban Design
P.O. Box 11137 Chandler, AZ 85248
Phone 480.332.0717 Fax 480.893.1999

ORDINANCE NO. ____

AN ORDINANCE CHANGING THE ZONING OF A PROPERTY GENERALLY BOUNDED BY PEORIA AVENUE ON THE SOUTH, BULLARD AVENUE ON THE EAST, REEMS ROAD ON THE WEST, AND CACTUS ROAD/ACOMA DRIVE ON THE NORTH, IN SECTIONS 20, AND THE SE¼ OF SECTION 17, TOWNSHIP 3 NORTH, RANGE 1 WEST, GILA AND SALT RIVER MERIDIAN, MARICOPA COUNTY, ARIZONA, TO PLANNED AREA DEVELOPMENT (R1-18 PAD, R1-5 PAD, R-2 PAD, C-2 PAD and Industrial PAD) WITH PRELIMINARY DEVELOPMENT PLAN.

WHEREAS, this Ordinance has been properly noticed for public hearing and the necessary hearings have completed; and

WHEREAS, changes have occurred in the vicinity of Peoria Avenue, Bullard Avenue, Reems Road, and Cactus Road/Acoma Drive, which require that the zoning of these parcels of land in that area be changed; and

WHEREAS, rezoning of the subject properties will enhance the health, safety, and welfare of the community, will not cause traffic congestion or depreciate surrounding property values and, at the same time is in harmony with the purposes and intent of the zoning ordinance, the plan for the area, and the Comprehensive Development Guide;

NOW THEREFORE BE IT ORDAINED, by the City Council of the City of Surprise, Arizona, that:

Section 1. This Ordinance is not of a general and permanent nature and shall not be codified.

Section 2. The properties described in Exhibit A is rezoned to Planned Area Development ("PAD") with Preliminary Development Plan.

Section 3. The Preliminary Development Plan for the property described on Exhibit A, entitled Rancho Gabriela, Surprise, Arizona, June 23, 2000 as Application No. PAD 98-107, a copy of which is on file in the Community Development Department, is approved.

Section 4. All present and future owners of the properties described on Exhibit A shall develop the properties only as provided in the approved Preliminary Development Plan and in compliance with the Stipulations contained in Exhibit B.

PASSED AND ADOPTED this _____ day of _____, 2000.

_____
Mayor

ATTEST:

_____
City Clerk

APPROVED AS TO FORM:

_____
City Attorney

Yeas: _____

Nays: _____

Z:\INDEX\Starlite\Enterprise\Docs\Ordinance - PAD.doc

City of Surprise Title 17 Zoning Codes

In the event of any conflict between the Rancho Gabriela PAD Development Standards as specified in this document and the following City of Surprise Zoning Codes, the Rancho Gabriela PAD Development Standards shall prevail.

Structures accessory to single-family dwellings	50′	3′	50′	3′
Structures for all other principal, conditional or accessory uses	50′	50′	50′	50′

2. Maximum building height: thirty feet.

G. Encroachment into Required Front and Side Yard Setbacks.

1. Open steps and decks shall be permitted to extend into the required front and side yard setbacks a distance of not more than five feet.

2. Covered patios, decks, porches or carports shall not be permitted encroachments in any required setbacks.

3. Normal Roof Projections (Eaves) into Required Side Yards. A house or garage roof may not be constructed within three feet of a side property line.

H. Additional Building and Performance Standards. Development of any portion of land within this district shall be subject to all applicable requirements of Chapter 17.32 of this title.

I. Relationship of Overlay Zones. Any property located in the R1-43 zone as well as the F-1, F-2, or AR overlay zones must comply with the regulations of the overlay zones. (Ord. 97-16 §6, 1997; Ord. 86-6 §7-701, 1986)

17.28.020 Single-family residential zone (R1-18). A. Purpose. The purpose of the R1-18 single-family residential zone is to provide for the development of single-family detached dwellings and directly related complementary uses at a low density. The zone is intended to be strictly residential in character with a minimum of disturbances due to traffic or overcrowding.

B. Principally Permitted Uses. See Section 17.24.020(A).

C. Conditionally Permitted Uses. See Section 17.24.020(B).

D. Permitted Accessory Uses. See Section 17.24.020(C).

E. Lot Area and Lot Dimensions.

1. Required lot area:

Use	Minimum Lot Area
Single-family dwelling units	18,000 square feet*
Other permitted uses	Minimum area to be determined by building area, parking requirements and required setbacks.

2. Required lot dimensions:

Use	Minimum Lot Width	Minimum Lot Depth
Single-family dwelling units	100 feet	150 feet
Other permitted uses	Lot dimensions to be determined by building area, parking requirements and required setbacks.	

3. Density: There shall not be more than one single-family dwelling unit on any one lot.

F. Setbacks, Yards and Heights.

1. Minimum setbacks from property line:

Use	Front	Interior Side	Corner Side	Rear Yard
Single-family dwelling	35′	10′	35′	30′
Schools, civic, cultural and religious institutions (including their accessory use structures)	50′	50′	50′	50′

---

* This may be calculated as an average lot size for lots within a given subdivision, provided no lot is less than seventeen thousand one hundred square feet in size and that not more than ten percent of the lots are less than eighteen thousand square feet in size.

Structures accessory to single-family residences	35′	3′	35′	3′
Structures for all other principal, conditional or accessory uses	35′	35′	35′	35′

2. Maximum building height: thirty feet.

G. Encroachment into Required Front and Side Yard Setbacks. See Section 17.28.010G.

H. Additional Building and Performance Standards. Development of any parcel of land within this district shall be subject to all applicable requirements of Chapter 17.32 of this title.

I. Relationship to Overlay Zones. Any property located in the R1-18 zone as well as the F-1, F-2, or AR overlay zones must comply with the regulations of the overlay zones. (Ord. 97-16 §7, 1997; Ord. 86-6 §7-702, 1986)

17.28.030 Single-family residential zone (R1-8). A. Purpose. The purpose of the R1-8 single-family residential zone is to provide for the development of single-family detached dwellings and directly related complementary uses at a low density. The zone is intended to be strictly residential in character with a minimum of disturbances due to traffic or overcrowding.

B. Principally Permitted Uses. See Section 17.24.020(A).

C. Conditionally Permitted Uses. See Section 17.24.020(B).

D. Permitted Accessory Uses. See Section 17.24.020(C).

E. Lot Area and Lot Dimensions.

1. Required lot area:

Use	Minimum Lot Area
Single-family dwelling units	8,000 square feet*

* This may be calculated as an average lot size for lots within a given subdivision, provided no lot is less than seven thousand six hundred square feet in size and not more than ten percent of the lots are less than eight thousand square feet in size.

Other permitted uses	Minimum area to be determined by building area, parking requirements and required setbacks.

2. Required lot dimensions:

Use	Minimum Lot Width	Minimum Lot Depth
Single-family dwelling units	75 feet	100 feet
Other permitted uses	Lot dimensions to be determined by building area, parking requirements and required setbacks.	

3. Density: There shall not be more than one single-family dwelling unit on any one lot.

F. Setbacks, Yards and Heights.

1. Minimum setbacks from property line:

Use	Front	Interior Side	Corner Side	Rear Yard
Single-family dwelling	20'	6'/10'*	20'	20'
Schools, civic, cultural and religious institutions (including their accessory use structures)	50'	50'	50'	50'
Structures accessory to single-family residences	20'	3'	20'	3'
Structures for all other principal, conditional or accessory uses	20'	10'	20'	20'

* No side yard shall be less than six feet; at least one side yard shall be ten feet.

2. Maximum building height: thirty feet.

G. Encroachment into Required Front and Side Yard Setbacks. See Section 17.28.010(G).

H. Additional Building and Performance Standards. Development of any parcel of land within this district shall be subject to all applicable requirements of Chapter 17.32 of this title.

I. Relationship to Overlay Zones. Any property located in the R1-8 zone as well as the F-1, F-2, or AR overlay zones must comply with the regulations of the overlay zones. (Ord. 97-16 §8, 1997; Ord. 86-6 §7-703, 1986)

17.28.040 Single-family residential zone (R1-5). A. Purpose. The purpose of the R1-5 single-family residential zone is to provide for the development of single-family detached dwellings and directly related complementary uses at a moderate density. The zone is intended to be strictly residential in character with a minimum of disturbances due to traffic or overcrowding.

B. Principally Permitted Uses. See Section 17.24.020(A).

C. Conditionally Permitted Uses. See Section 17.24.020(B).

D. Permitted Accessory Uses. See Section 17.24.020(C).

E. Lot Area and Lot Dimensions.

1. Required lot area:

Use	Minimum Lot Area
Single-family dwelling units	5,500 square feet*.
Other permitted uses	Minimum area to be determined by building area, parking requirements and required setbacks.

2. Required lot dimensions:

---

* This may be calculated as an average lot size for lots within a given subdivision, provided no lot is less than five thousand two hundred square feet in size and not more than ten percent of the lots are less than five thousand five hundred square feet in size.

Use	Minimum Lot Width	Minimum Lot Depth
Single-family dwelling units	50 feet	100 feet
Other permitted uses	Lot dimensions to be determined by building area, parking requirements and required setbacks.	

3. Density: There shall not be more than one single-family dwelling unit on any one lot.

F. Setbacks, Yards and Heights.

1. Minimum setbacks from property line:

Use	Front	Interior Side	Corner Side	Rear Yard
Single-family dwelling	20′	10′*	20′	20′
Schools, civic, cultural and religious institutions (including their accessory use structures)	50′	50′	50′	50′
Structures accessory to single-family residences	20′	3′	20′	3′
Structures for all other principal, conditional or accessory uses	20′	10′	20′	20′

Zero lot line development may be permitted which may result in the creation of a two-family residential structure.

---

* At least one side yard shall be ten feet; the setback for the remaining side may be less than ten providing principal building separations are at least ten feet and that in the case of detached units, the other side yard is at least three feet.

2. Maximum building height: thirty feet.

G. Encroachment into Required Front and Side Yard Setbacks. See Section 17.28.010(G).

H. Additional Building and Performance Standards. Development of any parcel of land within this district shall be subject to all applicable requirements of Chapter 17.32 of this title.

I. Relationship to Overlay Zones. Any property located in the R1-5 zone as well as the F-1, F-2, or AR overlay zones must comply with the regulations of the overlay zones. (Ord. 97-16 §9, 1997; Ord. 86-6 §7-704, 1986)

17.28.050 Multifamily residential zone (R-2). A. Purpose. The purpose of the R-2 multifamily residential zone is to provide for medium density housing in multiple-family structures and directly related complementary uses. The R-2 zone is designed to allow economical use of land while creating an attractive, functional and safe residential environment.

B. Principally Permitted Uses. See Section 17.24.020(A).

C. Conditionally Permitted Uses. See Section 17.24.020(B).

D. Permitted Accessory Uses. See Section 17.24.020(C).

E. Lot Area and Lot Dimensions. In determining minimum lot area and minimum lot dimensions, the following table should be used:

Use	Minimum Area per Unit	Minimum Lot Dimensions*	Outdoor Living Area**
Two-family dwelling	3,000 sq. ft.	Width: 70' Depth: 90'	600 sq. ft./ dwelling unit

* These dimensions apply to the initial lot size per structure. Initial lots may be divided to accommodate individual ownership of the structures' dwelling units.

** Outdoor living area in the minimum amount specified above must be provided on any lot occupied by the multiple residence or townhouse building. This space must be easily accessible for daily recreational use by the occupants of the building. Driveways, parking areas, ornamental landscaped areas (having a width of less than twenty feet), and required side or front yards shall not be considered as an outdoor living area, except in the case of interior townhouse units where said unit is less than twenty feet in width, in which case the minimum width of the outdoor living area shall be the width of the lot.

Use	Minimum Area per Unit	Minimum Lot Dimensions*	Outdoor Living Area**
Three-family dwelling	3,000 sq. ft.	Width: 80' Depth: 90'	500 sq. ft./ dwelling unit
Four-family dwelling	3,000 sq. ft.	Width: 80' Depth: 90'	400 sq. ft./ dwelling unit
Townhouse cluster	3,000 sq. ft.***	Width: 90' Depth: 90'	400 sq. ft./ dwelling unit
Other permitted uses		Minimum area and lot dimensions to be determined by building area, parking requirements and required setbacks.	

F. Schedule of Allowances. The minimum areas per unit in subsection E of this section may be adjusted according to the following, except allowance shall not be made for two-family or three-family dwellings.

1. For each parking stall in or under the residence, or otherwise completely underground, subtract four hundred square feet from the total minimum lot area.

2. For each unit with a balcony or patio greater than forty square feet, subtract one hundred square feet from the outdoor living area.

G. Setbacks, Yards, and Heights.

1. Minimum setbacks from property line:

Use	Front	Interior Side	Corner Side	Rear
Two-family dwelling structure	20'	10'	20'	20'
Three-family dwelling structure	20'	10'	20'	20'
Four-family dwelling structure	20'	15'	20'	20'
Townhouse cluster structure	20'	15'	20'	20'
Schools, civic, cultural and religious institutions (including their accessory use structures)	50'	50'	50'	50'
Structures accessory to two-family dwelling structures	20'	3'	20'	3'
Structures for all other principal or conditional uses	20'	10'	20'	20'

*** May be calculated as average lot size per unit per structure.

2. For apartment buildings, parking of motor vehicles shall not be allowed within the required front or corner side setbacks.

3. Maximum building height: thirty feet.

H. Multifamily Accessory Buildings.

1. Accessory buildings shall observe the same setback requirements established for the multiple residence building except that accessory buildings located within the rear yard of the multiple-residence buildings may be located to within five feet of the rear or interior side property line. The city council may require common walls for accessory buildings on the same lot where common walls will eliminate unsightly and hazardous areas. Accessory buildings on the same lot shall otherwise be separated by a distance of not less than ten feet.

2. Exteriors of accessory buildings shall have an exterior finish compatible to the main structure. Compatibility shall be determined by the city based on type and use of building materials.

I. Distance Between Buildings. When two or more principal buildings are located on one lot, the minimum separation between any two adjacent principal buildings shall be a distance not less than an amount equal to the height of the taller of the two buildings or twenty feet, whichever is greater when developed as a planned area development. For major and minor site plans, building separation shall be the sum of two interior side yard setbacks.

J. Additional Building and Performance Standards. Development of any parcel of land within this district shall be subject to all applicable requirements of Chapter 17.32 of this title.

K. Relationship to Overlay Zones. Any property located in the R-2 zone as well as the F-1, F-2, or AR overlay zones must comply with the regulations of the overlay zones. (Ord. 97-16 §10, 1997; Ord. 86-6 §7-705, 1986)

17.28.060 Multifamily residential zone (R-3). A. Purpose. The purpose of the R-3 multifamily residential zone is to provide for high density housing in multiple-family structures and directly related complementary uses. The R-3 zone is designed to allow highly economical use of land while creating an attractive, functional and safe residential environment.

B. Principally Permitted Uses. See Section 17.24.020(A).

C. Conditionally Permitted Uses. See Section 17.24.020(B).

D. Permitted Accessory Uses. See Section 17.24.020(C).

E. Lot Area and Lot Dimensions. In determining minimum lot area and minimum lot dimensions, the following table should be used:

i. Front, 35 feet,
ii. Interior side and rear, 15 feet,
iii. Corner side, 15 feet,
iv. Residential zone boundary, 45 feet;

b. Parking lot:
i. Front, 4 feet,
ii. Interior side and rear, 3 feet,
iii. Corner side, 4 feet,
iv. Residential zone boundary, 3 feet.

2. The maximum height of structures shall be thirty feet.

G. Lot Width and Lot Area.

1. The minimum lot width shall be one hundred feet.

2. Minimum lot area shall be determined by building area, parking requirements and required setbacks.

H. Additional Building and Performance Standards. Development of any parcel of land within this district shall be subject to all applicable requirements of Chapter 17.32 of this title.

I. Relationship to Overlay Zones. Any property located in the C-1 zone as well as the F-1 or F-2 overlay zones must comply with the regulations of the overlay zones. (Ord. 97-16 §12, 1997; Ord. 86-6 §7-707, 1986)

17.28.080 Community commercial zone (C-2). A. Purpose. The purpose of the C-2 community commercial zone is to provide for low intensity, retail or service outlets which deal directly with the consumer for whom the goods or services are intended, or which render a nonconsumer oriented service which does not materially increase vehicular traffic or other pollution, and which does not decrease the suitability of the surrounding area for residential or general commercial purposes. Except as set forth above, the uses allowed in this district are intended to provide goods and services on a community market scale, located in areas which are served by arterial street facilities.

B. Principally Permitted Uses. See Section 17.24.030(A).

C. Conditionally Permitted Uses.

1. Automobile service stations:

a. Site improvements such as buildings or structures (permanent or temporary) shall be separated from any residential zone by at least fifty feet. Parking areas shall be separated from any residential zone by at least fifteen feet.

b. The total site area shall not be less than twelve thousand square feet.

c. Pump islands shall be set back not less than twenty-five feet from any street right-of-way line, not less than forty feet from any nonstreet property line and

not less than seventy-five feet from any residential zone boundary.

d. Hydraulic hoists, pits, and all lubrication, greasing, washing, repair and diagnostic equipment shall be used and enclosed within a building.

e. Interior curbs of not less than six inches in height shall be constructed to separate driving surfaces from sidewalks, landscaped areas and street rights-of-way.

f. No automobile service station on a site contiguous to any residential zone shall be operated between the hours of eleven p.m. and seven a.m. of the following day.

2. Automobile washing establishments:

a. Automobile washing establishments shall be subject to the same limitations and conditions as are specified heretofore in subsections (C)(1)(a), (b), (c), (e) and (f) of this section.

b. Sufficient off-street area to provide space for not less than ten automobiles waiting to be washed or three waiting spaces per washing stall, whichever is greater, shall be provided. A space twenty feet by nine feet shall be deemed adequate for each such required space.

c. All washwater disposal facilities including sludge, grit removal and disposal equipment shall be subject to the approval of the city engineer, and shall conform with all city ordinances regarding sewage and health and shall be designed so as not to detrimentally affect the city sewer system.

3. Convenience food restaurants: Convenience food restaurants shall be subject to the same limitations and conditions as are specified heretofore in subsections (C)(1)(a), (e) and (f) of this section for Automobile Service Stations.

4. Day care center:

a. A minimum of seventy-five square feet of outdoor play space per child shall be provided from which at least fifty square feet of fenced in play space per child shall be provided. Fenced in, outdoor, play space shall not include driveways, parking areas or land unsuited by virtue of other usage or natural features for children's play space.

b. At least two hundred fifty square feet of lot area per child shall be provided.

5. Model homes, temporary.

6. Recreational vehicle, mobile home and manufactured home park and overnight campground. No person shall place or occupy any mobile home anywhere in the city except in a mobile home and manufactured home park which has been established pursuant to this section. No person shall place or occupy any manufactured home anywhere in the city except in a mobile home and manufactured home park which has been established pursuant to this section or in a manu-

factured home subdivision which has been established pursuant to Section 17.32.140. Additionally, no person shall occupy any recreational vehicle anywhere in the city except in a recreational vehicle, mobile home and manufactured home park or overnight campground which has been established pursuant to this section.

a. Minimum size of park shall be ten net acres.

b. The minimum space for a mobile home or manufactured home shall be four thousand square feet; for a travel trailer, park model and motor home two thousand square feet.

c. Travel trailer, park models and motor homes in mobile/manufactured home parks shall constitute no more than fifteen percent of the total spaces. These spaces must be delineated on the approved development plan for each mobile/manufactured home park. These spaces should be located together and not spread throughout the park. These spaces shall not be continuously occupied for more than six months.

d. No more than one mobile home, manufactured home, travel trailer, park model or motor home shall be placed on each space.

e. The minimum building setback, including accessory buildings, from any lot line or street right-of-way shall be as set forth below:

	Setbacks	Feet
i.	Front,	10
ii.	Interior side,	5
iii.	Corner side,	10
iv.	Rear,	10

f. Off-street parking for at least two automobiles shall be provided in each space or on each lot or on a separate designated parking area within a park.

g. Interior private streets shall not be less than thirty-two feet in width, and shall be paved with a dust-free surface. Individual recreational vehicle parking pads shall be plainly marked and paved with a dust-free surface.

h. Screening shall be provided around the exterior of the park by a minimum six-foot masonry wall.

i. All mobile/manufactured homes shall be skirted in a uniform manner.

j. No mobile/manufactured home or recreational vehicle space shall be located within fifteen feet of any street. Such area shall be maintained as a landscape buffer area which can be used for recreation or as part of a retention area.

k. A common area of five hundred square feet for each rental space shall be provided and approved for recreation, laundry, and service purposes.

l. No space within a recreational vehicle, mobile home and manufactured home park and overnight campground shall be used as a storage area; however, motor homes or travel trailers which are set up for occupancy, but which are vacant, are allowed.

m. Mobile/manufactured home and recreational vehicle parks may include accessory storage buildings, office buildings, recreational facilities, laundry facilities, storage areas, and other common facilities use provided for park residents.

n. Approval of all mobile/manufactured home and recreational vehicle parks shall be subject to the provisions in Chapter 17.32 and any amendments thereto.

o. Approved trash disposal and toilet facilities shall be provided for use of overnight campers.

p. Campground plans, certified approved by Maricopa department of health services shall be submitted.

7. Video arcades.

8. Laboratories or facilities for monitoring or analyzing substances or materials provided that no materials or substances shall be permitted in such zone if they constitute an increased risk of fire, disease of damage to the public health of persons in the vicinity thereof and further provided that any such facilities shall be so constructed, or screened, as to ensure that the visual impact of such use is in keeping with the principally permitted uses of this zone.

9. Temporary facilities for sale of automobiles, recreational vehicles, boats, mobile or manufactured homes provided that there shall be no on-site facilities for servicing or repair thereof. For purposes of this section temporary means a period of time not to exceed six calendar months.

10. Automobile retail sales:

a. The primary business of an automobile sales establishment must be the retail sale of new automobiles.

b. On-site servicing and repair of automobiles is not permitted.

c. No retail automobile sales establishment shall be operated between the hours of eleven p.m. and seven a.m.

d. Site improvements such as buildings or structures (temporary or permanent) shall be separated from every residential zone by a minimum of fifty feet.

11. Automobile rental/leasing:

a. The primary business of an automobile rental/leasing facility must be the rental and leasing of automobiles.

b. No rental or leasing of other vehicles such as trucks, trailers or RVs shall be allowed.

c. No automobile rental/leasing facility shall be operated between the hours of eleven p.m. and seven a.m.

d. No outside storage of any type shall be permitted, except for passenger vehicle storage.

e. On-site service and repairs of automobiles is prohibited, except for vacuuming, window cleaning and checking fluids.

f. The area used for parking and/or vehicle storage shall be properly screened with a wall, fence, hedge, plantings or combination thereof.

g. The area used for parking and/or storage shall be paved.

h. Site improvements such as buildings or structures (temporary or permanent) shall be separated and screened from all residential zones by a minimum of fifty feet.

12. Automobile service center, minor, provided that

a. All services and repairs shall be conducted entirely within an enclosed building except sales of gasoline.

b. Outdoor storage is prohibited.

c. Outdoor displays are prohibited.

d. No person shall operate a minor automobile service center between the hours of eleven p.m. and seven a.m.

e. All buildings and/or structures (temporary or permanent) shall be screened from any residential zone.

f. Any area used for parking shall be paved.

g. There shall be no manufacturing, compounding, processing or treatment of products other than that which is clearly incidental to retail sales or the business operation of a minor automobile service center, and where all such completed products are sold at retail on the premises.

13. Outdoor recreational facility provided the entire facility not exceed three acres in size.

14. Retail plant nursery, provided all incidental equipment and supplies including fertilizer and empty cans, are kept within a completely enclosed building or within an area enclosed on all sides by a solid fence or wall at least six feet in height and no goods, materials or objects are stacked higher than the fence or wall so erected.

15. Shelter care facility.

16. Personal wireless service facilities as per Section 17.32.150.

D. Permitted Accessory Uses.

1. Those accessory uses permitted under Section 17.28.070(D).

E. Access.

1. Access to commercial activities shall be allowed only on arterial streets or a street specifically designed for such development.

2. Access points shall be located at least one hundred fifty feet from any street intersection.

3. Access points on the same street shall not be spaced closer than one hundred feet (as measured from centerlines). Commercial developments of a small scale shall be encouraged to develop common access drives and parking facilities.

4. Commercial developments which may not be able to meet the requirements of subsections (E)(2) and (3) of this section, and are requesting deviations from the above noted standards, shall submit to the city engineer an engineer's report certified by a professional engineer addressing the following site conditions, both present and future:

a. Traffic volumes;
b. Turning movements;
c. Traffic controls;
d. Site design;
e. Site distances;
f. Location and alignment of other access points.

Based upon the above data, the city engineer shall determine whether a deviation from the requirement standards is justified and, if so, what alternative requirements will be necessary.

F. Setbacks and Height.

1. The minimum building setback from any lot line or public street right-of-way shall be as set forth below:

Setbacks	Feet
a. Building setbacks:	
i. Front,	35
ii. Interior side and rear,	15
iii. Corner side,	25
iv. Residential zone boundary,	45
b. Parking lots:	
i. Front,	4
ii. Interior side and rear,	3
iii. Corner side,	4
iv. Residential zone boundary,	3

2. Maximum building height: thirty-five feet; provided, however, that a building may exceed thirty-five feet in height if the entire portion of the building which exceeds thirty-five feet is so constructed that it cannot be used or occupied by humans for any purpose, and if the planning and zoning commission approves the extension above thirty-five feet prior to the commencement of construction. In determining whether to approve a height extension, the planning and zoning commission shall consider whether the proposed extension will pose an unreasonable risk of injury to persons or property in light of the city's fire fighting equipment and capabilities.

G. Lot Width and Lot Area.

1. The minimum lot width shall be one hundred feet except that corner lots shall have a minimum width of one hundred fifty feet.

2. Minimum lot area shall be determined by building area, parking requirements and required setbacks.

H. Additional Building and Performance Standards. Development of any parcel of land within this district shall be subject to all applicable requirements of Chapter 17.32 of this title.

I. Relationship to Overlay Zones. Any property located in the C-2 zone as well as the F-1 or F-2 overlay zones must comply with the regulations of the overlay zones. (Ord. 97-16 §13, 1997; Ord. 94-14 §2, 1996; Ord. 94-5 §2, 1994; Ord. 94-1 §2, 1994; Ord. 90-9 §1, 1990; Ord. 88-5 §§1, 2, 1988; Ord. 86-6 §7-708, 1986)

17.28.090 General commercial zone (C-3). A. Purpose. The purpose of the C-3 general services zone is to provide for land intensive, retail or service operations. These services should be located in concentrated service areas with good accessibility to the public but should be carefully buffered from other uses and visibility from arterial streets.

B. Principally Permitted Uses. See Section 17.24.030(A).

C. Conditionally Permitted Uses.

1. Automobile drive-in theaters:

a. Automobile drive-in theater parking areas shall be screened from view of any residential development.

b. Light, glare and noise shall not impact nearby residential developments.

2. Mini-warehouses/distribution center:

a. Minimum site size shall be one acre; maximum building footprint shall not exceed twenty-five thousand square feet.

b. On-site circulation, drives and parking:

i. Each mini-warehouse site shall provide a minimum of two exits.

ii. All one-way driveways shall provide for one ten-foot parking lane and one fifteen-foot travel lane. Traffic direction and parking shall be designated by signing or painting.

iii. All two-lane driveways shall provide for one ten-foot parking lane and two twelve-foot travel lanes.

iv. The parking lanes may be eliminated when the driveway does not serve storage cubicles.

v. At least one parking space for each ten storage cubicles equally distributed throughout the storage area shall be provided.

vi. All driveways, parking, loading, and circulation areas shall be paved with concrete, asphalt or asphaltic concrete.

c. Fencing and screening:

i. Fencing shall be required around the perimeter of the property and constructed of decorative

1. Any property located in the I-3 zone as well as the F-1 or F-2 overlay zones must comply with the regulations of the overlay zones.

2. A conditional use permit approval may include provisions that modify the screening, landscaping, parking or other requirements of Title 17 as necessary to meet the specific site conditions. (Ord. 97-16 §19, 1997)

17.28.140 Planned area development zone--P.A.D.

A. Purpose.

1. As an alternative to conventional zoning and development approaches and processes, the planned area development (P.A.D.) procedures and regulations are set forth in order that the public health, safety and general welfare be furthered in an era of increasing urbanization; to encourage innovations in residential, commercial and industrial development so that greater opportunities for better housing, recreation, shopping and employment, conveniently located, may extend to all citizens and residents of Surprise; to reflect changes in the technology of land development; to encourage a more creative approach in the utilization of land in order to accomplish a more efficient, aesthetic and desirable development which may be characterized by special features of the geography, topography, size or shape of a particular property, and to provide a compatible and stable environment, in harmony with that of the surrounding area.

2. The P.A.D. may include any development having one or more principal uses or structures on a single parcel of ground or contiguous parcels. The P.A.D. shall consist of a harmonious selection of uses and groupings of buildings, parking areas, circulation and open spaces, and shall be designed as an integrated unit, in such a manner as to constitute a safe, efficient and convenient urban area.

B. General Requirements and Standards.

1. Ownership. The tract shall be a development of land under unified control at the time of application and planned and scheduled to be developed as a whole.

2. Conformance with Comprehensive Development Guide. The land uses and design of the proposed P.A.D. shall be consistent with the city comprehensive development guide.

3. P.A.D. Regulations.

a. The minimum total P.A.D. shall be no less than five acres unless the applicant can show that the minimum P.A.D. requirements should be waived because the waiver would be in the public interest and that one or both of the following conditions exist:

i. Unusual physical features of the property itself or of the surrounding neighborhood are such that development under the standard provisions of the residential districts would not be appropriate in order to con-

serve a physical or terrain feature of importance to the neighborhood or community.

ii. The property is adjacent to or across the street from property which has been developed under the provisions of this section and will contribute to the amenities of the neighborhood.

4. Uses in a P.A.D. Any use may be allowed in a P.A.D., provided it is consistent with the Comprehensive Development Guide.

5. Residential Density in P.A.D.s.

a. Residential development in a P.A.D. may provide for a variety of housing types allowed in any one of the basic residential zoning districts. In addition, the number of dwelling units allowed may be flexible relative to the number of dwelling units per acre that would otherwise be permitted by the zoning regulations applicable to the site. However, the total number of dwelling units and the resulting density allowed in a P.A.D. shall be consistent with the land use plan of the city's comprehensive development guide.

b. In determining the reasonableness of the densities in a P.A.D., the planning and zoning commission and city council shall consider increased efficiency in the provision of public facilities and services based, in part, upon:

i. The location, amount and proposed use of common open space;

ii. The location, design and type of dwelling units;

iii. The physical characteristics of the site;

iv. Particular distinctiveness and excellence in siting, design and landscaping.

6. Front, Rear and Side Yard Building Setback Regulations.

a. Front and rear yard setbacks shall be established by the city council at the time of approval of the final subdivision plat and shall be clearly identified on the final subdivision plat.

b. Unless a common wall or zero lot line is approved by the city council, there shall be a minimum separation between structures on adjoining residential lots of ten feet.

c. There shall be a side yard setback of not less than twenty feet from the curb line on any lot which adjoins a public or private street.

d. Commercial building setbacks shall be a minimum of thirty-five feet or such greater distance as may be equal to the maximum height of the building.

7. More than One Building per Lot. More than one building may be placed on one platted or recorded lot in any P.A.D. Areas for single-family detached dwellings or

that certain land areas or structures are provided within the P.A.D. for private recreational use or as service facilities, the owner of such land and buildings shall establish an arrangement to assure the city of a continued standard of maintenance. These common areas may be placed under the ownership of one of the following, depending which is more appropriate:

a. Dedicated to public where a communitywide use would be anticipated;

b. Landlord control;

c. Landowners association, provided all of the following conditions are met:

i. The landowners association must be established prior to any sale.

ii. Membership must be mandatory for each owner and any successive buyer.

iii. The open space restrictions must be permanent or tied to a long-term agreement (e.g., ninety-nine years).

iv. The association must be responsible for liability insurance and the maintenance of recreational, service and other facilities as deemed necessary by the city.

v. Landowners must pay their pro rata share of the cost and the assessment levied by the association can become a lien on the property in accordance with Arizona statutes.

vi. The association must be required to adjust its assessment to meet changing needs.

vii. The association must be required to, at minimum, adjust its assessment on an annual basis by a percentage not less than the previous year's increase in the consumer price index.

14. Building Height and Setbacks. Maximum building height: thirty-five feet; provided, however, that a building may exceed thirty-five feet in height if the entire portion of the building which exceeds thirty-five feet is so constructed that it cannot be used or occupied by humans for any purpose, and if the planning and zoning commission approves the extension above thirty-five feet prior to the commencement of construction. In determining whether to approve a height extension, the planning and zoning commission shall consider whether the proposed extension will pose an unreasonable risk of injury to persons or property in light of the city's fire fighting equipment and capabilities. In general, a building's setback from property adjacent to the P.A.D. site shall approximate its height.

15. Landscaping. Landscaping and/or fencing shall be provided according to a plan approved by the city and shall include a detailed planting list with sizes indicated.

16. Utilities. All utilities, including electricity and telephone, shall be installed underground. (Ord. 97-16 §16(part), 1997; Ord. 94-5 §5, 1994; Ord. 91-7, 1991; Ord. 86-6 §7-711, 1986)

17.28.150 Age restricted overlay zone (AR). A. Purpose. The age restricted (AR) overlay zone is intended to allow for orderly and planned residential development which is specially designed for residency by persons of advanced age by enacting age-specific conditions, covenants, restrictions, or regulations on parcels in the city.

B. Principally Permitted Uses. The principally permitted uses shall be the same as are allowed in the underlying zoning district which may be any of the residential zones or planned area development zone (PAD) as defined in the Code of Ordinances as it exists or may be amended, but not with any other zoning district.

C. Conditionally Permitted Uses. The conditionally permitted uses shall be the same as are allowed in the underlying zoning district which may be any of the residential zones or planned area development zone (PAD) as defined in the Code of Ordinances as it exists or may Be amended, but not with any other zoning district.

D. Permitted Accessory Uses. The permitted accessory uses shall be the same as are allowed in the underlying zoning district which may be any of the residential zones or planned area development zone (PAD) as defined in the Code of Ordinances as it exists or may be amended, but not with any other zoning district.

E. Size. The age restricted overlay zone shall only be established on parcels of forty or more contiguous acres.

F. Application Requirements.

1. Any person applying for an age restricted overlay zone shall submit the following:

a. A petition signed by one hundred percent of the owners of property within the proposed district; or

b. Clear and convincing documentation that all of the property within the proposed district has been developed, advertised and sold or rented under specific age restrictions.

2. The city will not consider any application for an age restricted overlay zone until all requirements of this subsection have been met.

G. Application Procedure. Any person requesting an age restricted overlay zone shall follow the procedure specified in Section 17.36.020 of the Code of Ordinances as it exists or shall be amended.

H. Prohibited Acts. No person shall enact age-specific conditions, covenants, restrictions, or regulations on any parcel in any area of the city except where an age

Industrial PAD
Permitted Use List
Rancho Gabriela

The purpose of this district is to provide for limited manufacturing, processing, warehousing and other similar uses. The primary elements of the majority of the uses in this district are envisioned to occur indoors within an enclosed building. Certain outdoor uses are allowed as set forth in the permitted use list below if sufficient screening and buffering of the outside elements is provided adjacent to residential uses and the perimeter streets. Any use not listed below which is compatible with the intent of this district may be approved by the City of Surprise Planning Director.

- Automobile, boat or recreational vehicle sales, service and rental
- Automobile, boat or recreational vehicle storage
- Banks and other savings and lending institutions
- Boat repair
- Building materials sales yard, including sand and gravel or other inert material used for landscaping
- Church and parish house
- Contractors storage yard
- Electronic instruments and devices, assembling and manufacturing
- Equipment rental or storage yard
- Essential public service or utility installation
- Exterior storage of goods and materials provided that all goods and materials are screened from view from adjacent properties and rights-of-way
- Farming, landscaping and agricultural supplies and equipment, wholesaling and storage
- Feed store, including yard
- Gas station/convenience store
- Golf course and customary accessory uses
- Greenhouse
- Home improvement centers
- Industrial, scientific or business research development and testing laboratories and offices
- Lumberyard, provided that all goods and material are screened from adjacent properties
- Manufacturing, fabrication, assembly and processing uses, so long as the primary use of the property is not the basic processing and compounding of raw materials or food products, except as otherwise provided in this section or as interpreted as being analogous by the Planning Director
- Mini warehouse for storage purposes without retailing
- Mortuary/graveyard
- Offices for administrative, clerical or sales services
- Offices for professional use, including laboratories and imaging
- Packing houses for fruit or vegetables, not including processing
- Plant nursery, wholesale and retail
- Recreational vehicle repair
- Restaurants (drive thru's and outdoor dining permitted with a Conditional Use Permit)
- Retail commercial operations directly related to the primary industrial use, provided that they do not exceed twenty (20) percent of the gross floor area of the primary industrial use
- Sports facilities, including stadiums and related accessory uses
- Warehousing and distribution centers

LEGAL DESCRIPTION
FOR RANCHO GABRIELA
BASED ON RESULTS OF SURVEY BY AMERICAN ENGINEERING CO., JOB NO. 97477
AND SEALED BY DAVID M. SCHLIEF ON 8/10/1998.
RESIDENTIAL R1-18 P.A.D. PARCEL

A PARCEL OF LAND SITUATED IN THE SOUTHEAST QUARTER OF SECTION 17 AND A PORTION OF SECTION 20, TOWNSHIP 3 NORTH, RANGE 1 WEST OF THE GILA AND SALT RIVER BASE AND MERIDIAN, MARICOPA COUNTY, ARIZONA, MORE PARTICULARY DESCRIBED AS FOLLOWS:

BEGINNING AT THE SOUTHWEST CORNER OF SAID SECTION 20;

THENCE NORTH 01°10'49" WEST ALONG THE WEST LINE OF SAID SECTION 20 A DISTANCE OF 912.76 FEET;

THENCE NORTH 88°49'11" EAST A DISTANCE OF 1101.01 FEET;

THENCE NORTH 47°33'35" EAST A DISTANCE OF 142.44 FEET;

THENCE NORTH 42°26'25" WEST A DISTANCE OF 60.00 FEET;

THENCE NORTH 47°33'35" EAST A DISTANCE OF 152.43 FEET;

THENCE NORTH 47°15'59" WEST A DISTANCE OF 261.77 FEET;

THENCE NORTH 01°10'49" WEST A DISTANCE OF 213.86 FEET;

THENCE NORTH 42°44'01" EAST A DISTANCE OF 620.72 FEET;

THENCE NORTH 43°53'06" EAST A DISTANCE OF 46.77 FEET;

THENCE NORTH 52°27'44" EAST A DISTANCE OF 46.21 FEET;

THENCE NORTH 55°11'08" EAST A DISTANCE OF 55.00 FEET;

THENCE ALONG A NON-TANGET CURVE WHICH CENTER BEARS NORTH 55°11'08" EAST IN A SOUTHEASTERLY DIRECTION THROUGH A CENTRAL ANGLE OF 06°16'16" A DISTANCE OF 109.45 FEET AND HAVING A RADIUS OF 1000.00 FEET;

THENCE NORTH 48°54'53" EAST A DISTANCE OF 30.00 FEET;

THENCE NORTH 42°44'01" EAST A DISTANCE OF 992.69 FEET;

THENCE SOUTH 47°15'59" EAST A DISTANCE OF 713.28 FEET;

THENCE NORTH 42°44'01" EAST A DISTANCE OF 955.00 FEET;

THENCE SOUTH 47°15'59" EAST A DISTANCE OF 164.15 FEET;

THENCE ON A TANGENT CURVE TO THE LEFT WITH A CENTRAL ANGLE OF 39° 12'35", A DISTANCE OF 684.34 FEET, AND A RADIUS OF 1000.00 FEET;

THENCE NORTH 01° 00'28" WEST A DISTANCE OF 759.29 FEET;

THENCE NORTH 27° 37'14" WEST A DISTANCE OF 197.14 FEET;

THENCE NORTH 88° 49'16" EAST A DISTANCE OF 338.14 FEET;

THENCE SOUTH 01° 10'44" EAST A DISTANCE OF 39.22 FEET;

THENCE NORTH 88° 50'22" EAST A DISTANCE OF 695.00 FEET TO THE EAST LINE OF SAID SECTION 20;

THENCE ALONG THE EAST LINE OF SAID SECTION 20 SOUTH 01° 10'44" EAST A DISTANCE OF 900.00 FEET TO THE EAST QUARTER CORNER OF SAID SECTION 20;

THENCE SOUTH 01° 09'38" EAST A DISTANCE OF 8.01 FEET;

THENCE ALONG A NON-TANGENT CURVE TO THE SOUTHWEST WHOSE CENTER BEARS SOUTH 14° 18'22" EAST THROUGH A CENTRAL ANGLE OF 39° 57'54" A DISTANCE OF 6283.32 FEET WITH A RADIUS OF 9008.08 FEET TO THE SOUTH LINE OF SAID SECTION 20;

THENCE ALONG SAID SOUTH LINE SOUTH 89° 58'06" WEST A DISTANCE OF 813.58 FEET TO THE SOUTHWEST CORNER OF SAID SECTION 20 AND THE POINT OF BEGINNING.

THE ABOVE DESCRIBED PARCEL OF LAND CONTAINS 2,931,601 SQUARE FEET OR 67.30 ACRES.

REGISTERED LAND SURVEYOR
CERTIFICATE NO.
28720
HOWARD CLARK
CORNELL
Date Signed 6/21/2006
ARIZONA, U.S.A.

LEGAL DESCRIPTION
FOR RANCHO GABRIELA
BASED ON RESULTS OF SURVEY BY AMERICAN ENGINEERING CO., JOB NO. 97477
AND SEALED BY DAVID M. SCHLIEF ON 8/10/1998.
RESIDENTIAL R1-5 P.A.D. PARCEL

A PARCEL OF LAND SITUATED IN THE SOUTHEAST QUARTER OF SECTION 17 AND A PORTION OF SECTION 20, TOWNSHIP 3 NORTH, RANGE 1 WEST OF THE GILA AND SALT RIVER BASE AND MERIDIAN, MARICOPA COUNTY, ARIZONA, MORE PARTICULARLY DESCRIBED AS FOLLOWS:

COMMENCING AT THE SOUTHWEST CORNER OF SAID SECTION 20;

THENCE NORTH 01°10'49" WEST ALONG THE WEST LINE OF SAID SECTION 20 A DISTANCE OF 912.76 FEET TO THE **POINT OF BEGINNING**;

THENCE CONTINUING ALONG THE WEST LINE OF SAID SECTION 20 NORTH 01°10'49" WEST A DISTANCE OF 1730.00 FEET TO THE WEST QUARTER CORNER OF SAID SECTION 20;

THENCE NORTH 01°10'56" WEST A DISTANCE OF 880.00 FEET;

THENCE NORTH 88°49'11" EAST A DISTANCE OF 705.36 FEET;

THENCE NORTH 00°00'15" EAST A DISTANCE OF 1032.81 FEET;

THENCE SOUTH 89°59'45" EAST A DISTANCE OF 528.44 FEET;

THENCE NORTH 00°00'15" EAST A DISTANCE OF 715.00 FEET TO THE NORTH LINE OF SAID SECTION 20;

THENCE SOUTH 89°59'45" EAST ALONG THE NORTH LINE OF SAID SECTION 20 A DISTANCE OF 1366.45 FEET TO THE NORTH QUARTER CORNER OF SAID SECTION 20;

THENCE CONTINUING ALONG THE NORTH LINE OF SAID SECTION 20 SOUTH 89°59'45" EAST A DISTANCE OF 1921.32 FEET;

THENCE SOUTH 00° 00'15" WEST A DISTANCE OF 710.00 FEET;

THENCE SOUTH 89°59'45" EAST A DISTANCE OF 34.65 FEET;

THENCE SOUTH 01°10'44" EAST A DISTANCE OF 1009.30 FEET;

THENCE SOUTH 88°49'16" WEST A DISTANCE OF 338.14 FEET;

THENCE SOUTH 27°37'14" EAST A DISTANCE OF 197.14 FEET;

THENCE SOUTH 01°00'28" EAST A DISTANCE OF 759.29 FEET;

THENCE ALONG A NON-TANGENT CURVE TO THE NORTHWEST WHOSE CENTER BEARS NORTH 03°31'26" EAST THROUGH A CENTRAL ANGLE OF 39°12'35" A DISTANCE OF 684.34 FEET, HAVING A RADIUS OF 1000.00 FEET;

THENCE NORTH 47°15'59" WEST A DISTANCE OF 164.15 FEET;

THENCE SOUTH 42°44'01" WEST A DISTANCE OF 955.00 FEET;

THENCE NORTH 47°15'59" WEST A DISTANCE OF 713.28 FEET;

THENCE SOUTH 42°44'01" WEST A DISTANCE OF 992.69 FEET;

THENCE SOUTH 48°54'53" WEST A DISTANCE OF 30.00 FEET;

THENCE ALONG A NON-TANGENT CURVE TO THE NORTHWEST WHOSE CENTER BEARS NORTH 48°54'53" EAST THROUGH A CENTRAL ANGLE OF 06°16'16" A DISTANCE OF 109.45 FEET AND HAVING A RADIUS OF 1000.00 FEET;

THENCE SOUTH 55°11'08" WEST A DISTANCE OF 55.00 FEET;

THENCE SOUTH 52°27'44" WEST A DISTANCE OF 46.21 FEET;

THENCE SOUTH 43°53'06" WEST A DISTANCE OF 46.77 FEET;

THENCE SOUTH 42°44'01" WEST A DISTANCE OF 620.72 FEET;

THENCE SOUTH 01°10'49" EAST A DISTANCE OF 213.86 FEET;

THENCE SOUTH 47°15'59" EAST A DISTANCE OF 261.77 FEET;

THENCE SOUTH 47°33'35" WEST A DISTANCE OF 152.43 FEET;

THENCE SOUTH 42°26'25" EAST A DISTANCE OF 60.00 FEET;

THENCE SOUTH 47°33'35" WEST A DISTANCE OF 142.44 FEET;

THENCE SOUTH 88°49'11" WEST A DISTANCE OF 1101.01 FEET TO THE WEST LINE OF SAID SECTION 20 AND THE **POINT OF BEGINNING**.

THE ABOVE DESCRIBED TRACT OF LAND CONTAINS 12,274,468 SQUARE FEET OR 281.78 ACRES.

REGISTERED LAND SURVEYOR
CERTIFICATE NO.
28720
HOWARD CLARK
CORNELL
Date Signed 6/21/2022
ARIZONA, U.S.A.

LEGAL DESCRIPTION
FOR RANCHO GABRIELA
BASED ON RESULTS OF SURVEY BY AMERICAN ENGINEERING CO., JOB NO. 97477
AND SEALED BY DAVID M. SCHLIEF ON 8/10/1998.
RESIDENTIAL R1-5 (SECTION 17) PAD PARCEL

A TRACT OF LAND SITUATED IN A PORTION OF SECTION 17, TOWNSHIP 3 NORTH, RANGE 1 WEST OF THE GILA AND SALT RIVER BASE AND MERIDIAN, MARICOPA COUNTY, ARIZONA, MORE PARTICULARLY DESCRIBED AS FOLLOWS:

BEGINNING AT THE SOUTHEAST CORNER OF SAID SECTION 17;

THENCE NORTH 89°59'45" WEST ALONG THE SOUTH LINE OF SAID SECTION 17 A DISTANCE OF 2636.46 FEET TO THE SOUTH QUARTER OF SAID SECTION 17;

THENCE NORTH 01°05'37" WEST ALONG THE WEST LINE OF SAID SECTION 17 A DISTANCE OF 2633.92 FEET TO THE CENTER OF SAID SECTION 17;

THENCE SOUTH 89°51'00" EAST ALONG THE CENTER LINE OF SAID SECTION 17 A DISTANCE OF 2637.31 FEET TO THE EAST QUARTER CORNER OF SAID SECTION 17;

THENCE ALONG THE EAST LINE OF SAID SECTION 17 SOUTH 01°04'41" EAST A DISTANCE OF 2627.19 FEET TO THE **POINT OF BEGINNING**.

THE ABOVE DESCRIBED PARCEL OF LAND CONTAINS 6,935,039 SQUARE FEET OR 159.21 ACRES.

REGISTERED LAND SURVEYOR
CERTIFICATE NO.
28720
HOWARD CLARK
CORNELL
Date Signed 5/21/2008
ARIZONA, U.S.A.

TRACT 1

A TRACT OF LAND SITUATED IN A PORTION OF THE NORTHEAST QUARTER OF SECTION 20, TOWNSHIP 3 NORTH, RANGE 1 WEST OF THE GILA AND SALT RIVER BASE AND MERIDIAN, MARICOPA COUNTY, ARIZONA, MORE PARTICULARLY DESCRIBED AS FOLLOWS:

BEGINNING AT THE NORTHEAST CORNER OF SAID SECTION 20;

THENCE SOUTH 01°10'44" EAST ALONG THE EAST LINE OF SAID SECTION 20 A DISTANCE OF 710.15 FEET;

THENCE NORTH 89°59'45" WEST A DISTANCE OF 729.80 FEET;

THENCE NORTH 00°00'15" EAST A DISTANCE OF 710.00 FEET TO THE NORTH LINE OF SAID SECTION 20;

THENCE SOUTH 89°59'45" EAST A DISTANCE OF 715.14 FEET TO THE POINT OF BEGINNING.

THE ABOVE DESCRIBED TRACT OF LAND CONTAINS 513,136.8 SQUARE FEET OR 11.78 ACRES.

REGISTERED LAND SURVEYOR
CERTIFICATE NO.
28720
HOWARD CLARK
CORNELL
Date Signed 2/07/2007
ARIZONA, U.S.A.

TRACT 2

A TRACT OF LAND SITUATED IN A PORTION OF THE NORTHEAST QUARTER OF SECTION 20, TOWNSHIP 3 NORTH, RANGE 1 WEST OF THE GILA AND SALT RIVER BASE AND MERIDIAN, MARICOPA COUNTY, ARIZONA, MORE PARTICULARLY DESCRIBED AS FOLLOWS:

COMMENCING AT THE NORTHEAST CORNER OF SAID SECTION 20;

THENCE SOUTH 01°10'44" EAST ALONG THE EAST LINE OF SAID SECTION 20 A DISTANCE OF 710.15 FEET TO THE POINT OF BEGINNING;

THENCE CONTINUING ALONG THE EAST LINE OF SAID SECTION 20 SOUTH 01°10'44" EAST A DISTANCE OF 1054.38 FEET;

THENCE SOUTH 88°50'22" WEST A DISTANCE OF 695.00 FEET;

THENCE NORTH 01°10'44" WEST A DISTANCE OF 1068.52 FEET TO THE SOUTH LINE OF TRACT 1;

THENCE SOUTH 89°59'45" EAST ALONG THE SOUTH LINE OF TRACT 1 A DISTANCE OF 695.15 FEET TO THE POINT OF BEGINNING.

THE ABOVE DESCRIBED TRACT OF LAND CONTAINS 737,906.4 SQUARE FEET OR 16.94 ACRES.

REGISTERED LAND SURVEYOR
CERTIFICATE NO.
28720
Date Signed 2/07/2
ARIZONA, U.S.A.

TRACT 3

A TRACT OF LAND SITUATED IN A PORTION OF THE NORTHWEST QUARTER OF SECTION 20, TOWNSHIP 3 NORTH, RANGE 1 WEST OF THE GILA AND SALT RIVER BASE AND MERIDIAN, MARICOPA COUNTY, ARIZONA, MORE PARTICULARLY DESCRIBED AS FOLLOWS:

BEGINNING AT THE NORTHWEST CORNER OF SAID SECTION 20;

THENCE SOUTH 89°59'45" EAST ALONG THE NORTH LINE OF SAID SECTION 20 A DISTANCE OF 1270.17 FEET;

THENCE SOUTH 00°00'15" WEST A DISTANCE OF 715.00 FEET;

THENCE NORTH 89°59'45" WEST A DISTANCE OF 1255.36 FEET TO THE WEST LINE OF SAID SECTION 20;

THENCE NORTH 01°10'56" WEST ALONG SAID WEST LINE A DISTANCE OF 715.15 FEET TO THE POINT OF BEGINNING.

THE ABOVE DESCRIBED TRACT OF LAND CONTAINS 902,998.8 SQUARE FEET OR 20.73 ACRES.

REGISTERED LAND SURVEYOR
CERTIFICATE NO.
28720
HOWARD CLARK
CORNELL
Date Signed 2/07/2020
ARIZONA, U.S.A.

TRACT 4

A TRACT OF LAND SITUATED IN A PORTION OF THE NORTHWEST QUARTER OF SECTION 20, TOWNSHIP 3 NORTH, RANGE 1 WEST OF THE GILA AND SALT RIVER BASE AND MERIDIAN, MARICOPA COUNTY, ARIZONA, MORE PARTICULARLY DESCRIBED AS FOLLOWS:

COMMENCING AT THE NORTHWEST CORNER OF SAID SECTION 20;

THENCE SOUTH 01°10'56" EAST ALONG THE WEST LINE OF SAID SECTION 20 A DISTANCE OF 715.15 FEET TO THE POINT OF BEGINNING;

THENCE SOUTH 89°59'45" EAST ALONG THE SOUTH LINE OF TRACT 3 A DISTANCE OF 726.93 FEET;

THENCE SOUTH 00°00'15" WEST A DISTANCE OF 1032.81 FEET;

THENCE SOUTH 88°49'11" WEST A DISTANCE OF 705.39 FEET TO THE WEST LINE OF SAID SECTION 20;

THENCE NORTH 01°10'56" WEST ALONG SAID WEST LINE A DISTANCE OF 1047.61 FEET TO THE POINT OF BEGINNING.

THE ABOVE DESCRIBED TRACT OF LAND CONTAINS 744,956.8 SQUARE FEET OR 17.10 ACRES.

REGISTERED LAND SURVEYOR
CERTIFICATE NO.
28720
HOWARD CLARK
CORNELL
Date Signed
ARIZONA, U.S.A.

TRACT 5

A TRACT OF LAND SITUATED IN A PORTION OF THE WEST HALF OF SECTION 20, TOWNSHIP 3 NORTH, RANGE 1 WEST OF THE GILA AND SALT RIVER BASE AND MERIDIAN, MARICOPA COUNTY, ARIZONA, MORE PARTICULARLY DESCRIBED AS FOLLOWS:

COMMENCING AT THE WEST QUARTER CORNER OF SAID SECTION 20;

THENCE NORTH 88°49'11" EAST A DISTANCE OF 938.24 FEET;

THENCE ON A TANGENT CURVE TO THE LEFT HAVING A CENTRAL ANGLE OF 27°08'38" THROUGH A DISTANCE OF 379.00 FEET AND HAVING A RADIUS OF 800.00 FEET TO THE POINT OF BEGINNING;

THENCE LEAVING SAID CURVE ON A RADIAL OF SOUTH 28°19'27" EAST A DISTANCE OF 615.18 FEET;

THENCE ON A TANGENT CURVE TO THE LEFT HAVING A CENTRAL ANGLE OF 12°45'40" THROUGH A DISTANCE OF 222.72 FEET AND HAVING A RADIUS OF 1000.00 FEET;

THENCE LEAVING SAID CURVE ON A RADIAL OF NORTH 48°54'53" EAST A DISTANCE OF 30.00 FEET;

THENCE NORTH 42°44'01" EAST A DISTANCE OF 992.69 FEET;

THENCE NORTH 47°15'59" WEST A DISTANCE OF 758.72 FEET;

THENCE SOUTH 42°44'01" WEST A DISTANCE OF 514.79 FEET;

THENCE ON A TANGENT CURVE TO THE RIGHT, HAVING A CENTRAL ANGLE OF 18°56'31" THROUGH A DISTANCE OF 264.48 FEET AND HAVING A RADIUS OF 800.00 FEET TO THE POINT OF BEGINNING.

THE ABOVE DESCRIBED TRACT OF LAND CONTAINS 699, 573.6 SQUARE FEET OR 16.06 ACRES.

REGISTERED LAND SURVEYOR
CERTIFICATE NO.
28720
HOWARD CLARK
CORNELL
Date Signed 2/07/2007
ARIZONA, U.S.A.

LEGAL DESCRIPTION
FOR RANCHO GABRIELA
BASED ON RESULTS OF SURVEY BY AMERICAN ENGINEERING CO., JOB NO. 97477
AND SEALED BY DAVID M. SCHLIEF ON 8/10/1998.
INDUSTRIAL P.A.D. PARCEL

A TRACT OF LAND SITUATED IN A PORTION OF THE SOUTHWEST QUARTER OF SECTION 20, TOWNSHIP 3 NORTH, RANGE 1 WEST OF THE GILA AND SALT RIVER BASE AND MERIDIAN, MARICOPA COUNTY, ARIZONA, MORE PARTICULARLY DESCRIBED AS FOLLOWS:

COMMENCING AT THE SOUTHWEST CORNER OF SAID SECTION 20;

THENCE NORTH 89°58'06" EAST ALONG THE SOUTH LINE OF SAID SECTION 20 A DISTANCE OF 813.58 FEET TO THE POINT OF BEGINNING.

THENCE ALONG A NON-TANGENT CURVE TO THE NORTHEAST WHOSE CENTER BEARS SOUTH 47°24'06" EAST, THROUGH A CENTRAL ANGLE OF 39°57'54" A DISTANCE OF 6283.32 FEET WITH A RADIUS OF 9008.08 FEET TO THE EAST LINE OF SAID SECTION 20;

THENCE SOUTH 01°09'38" EAST ALONG SAID EAST LINE A DISTANCE OF 2629.76 FEET TO THE SOUTHEAST CORNER OF SAID SECTION 20;

THENCE SOUTH 89°58'13" WEST ALONG THE SOUTH LINE OF SAID SECTION 20 A DISTANCE OF 2636.02 FEET TO THE SOUTH QUARTER CORNER OF SAID SECTION 20;

THENCE CONTINUING ALONG THE SOUTH LINE OF SAID SECTION 20 SOUTH 89°58'06" WEST A DISTANCE OF 1822.35 FEET TO THE POINT OF BEGINNING.

THE ABOVE DESCRIBED PARCEL OF LAND CONTAINS 7,142,708 SQUARE FEET OR 163.97 ACRES.

REGISTERED LAND SURVEYOR
CERTIFICATE NO.
28720
HOWARD CLARK
CORNELL
Date Signed 6/21/2005
ARIZONA, U.S.A.

RANCHO GABRIELA
PLANNED AREA DEVELOPMENT

Contact List

Developer:	Stardust Development, Inc. 6730 N. Scottsdale Road, Suite 230 Scottsdale, AZ 85253 Telephone: 480-607-5800 Fax: 480-607-5801 Primary Contacts: Dorothy Desroches/Bob Speirs
Land Planner:	Urban Concepts P. O. Box 13315 Scottsdale, AZ 85267-3315 Telephone: 480-451-9244 Fax: 480-661-1522 Primary Contact: Cathy Hart
Engineer:	David Evans & Associates, Inc. 7878 N. 16th Street, Suite 250 Phoenix, AZ 85020 Telephone: 602-678-5151 Fax: 602-678-5155 Primary Contact: David George
Landscape Architect:	The F2 Group/The McGough Group P. O. Box 6312 Chandler, AZ 85246 Telephone: 480-752-0717 Fax: 480-752-3066 Primary Contact: Matt Franklin
Legal Representation:	Earl, Curley and Lagarde 3101 N. Central, Suite 1000 Phoenix, AZ 85012 Telephone: 265-0094 Fax: 265-2195 Primary Contact: Stephen C. Earl

RANCHO GABRIELA
LIST OF STIPULATED GUIDELINES

Rancho Gabriela, as revised, complies with the following Minimum Standards of:

DESIGN LIST A

A. Front Setbacks.
B. Side Setbacks.
C. Corner Side Setbacks.
D. Rear Setbacks.
E. Project Entry.
F. Setbacks Adjacent to an Arterial Street.
G. Staggered Perimeter Fences.
H. Diversity of Elevations.
I. Variety of Rooflines.
K Variation of Housing Product.
L. Required Open Space.

Rancho Gabriela, as revised, complies with the following Options of:

DESIGN LIST B–*Subdivision Design Options*

A. Cul-De-Sacs, Landscaped Island, Access to Open Space.
B. Additional Corner Lot Setbacks.
E. Stagger Front Yard Setbacks.
F. Meandering Retention Areas.
G. Visible Landscaped Open Spaces.
H. Arterial Road Open Space.
I. Curb/Sidewalk Separation, Enhanced Streetscape Landscaping.
K. Landscaping at Major "T" Intersections.
L. Pedestrian Access to Non-Residential Areas.
N. Bicycle/Pedestrian Paths and Trails.
O. Hardscape Features at Entrances.
Q. Enhanced Perimeter Theme Walls.

Rancho Gabriela, as revised, complies with the following Options of:

DESIGN LIST C–*Production Home Builder Design Options*

A. Varied Elevations.
B. De-emphasized Garage Fronts.
C. Enhanced Front Entries.
D. Distinct Roofing Types.
G. Extend Front Architectural Treatments.
H. Limit Garage Door Sizes.
I. Builder Installed Front Yard Landscaping in Lot Categories A, B and C.

Rancho Gabriela, as revised, complies with the following Options of:

DESIGN LIST D–*Amenity Package Options*

A. Connecting Trail System.
C. Outdoor Active Recreational Opportunities.
E. Large Open Space Corridor.

RANCHO GABRIELA
DETAILED LIST OF STIPULATED GUIDELINES

DESIGN LIST A–*Minimum Standards For R1-5 Lots*

Rancho Gabriela PAD, as revised, complies with the following Minimum Standards:

A. **Front Setbacks:** Minimum 18 feet to face of garage door for front entry garages, measured from the property line. Side entry garage homes must maintain two 20 foot parking spaces off-street and outside of garage. The front setbacks to a side entry garage shall be 12 feet, as measured from the property line. The front setback to any part of the house other than a garage shall be 12 feet, as measured from the property line. A side entry garage is a garage in which the garage door is angled at 45 degrees or greater in relation to the street. Garages angled less than 45 degrees shall be considered on a case by case basis. No driveway shall be less than 20 feet in length as measured from back of sidewalk, or less than 24 feet in length as measured from back of curb.

B. **Side Setbacks:** The side yard setbacks shown in Table A will apply to all houses except two-story houses constructed on lots in Lot Categories A, B, C and D. Two-story houses constructed in Lot Categories A, B, C, and D will be required to have a 7 foot and an 8 foot side yard and will be required to maintain a 14 foot separation between two two-story houses and 12 feet between any two-story house and any single-story house. If any portion of a two-story house is single-story the single-story setbacks will apply to the single-story portion of the two-story house. The setbacks will be measured from the stem walls of the house. Eaves on adjacent single-story houses (or the single-story portion of a two-story house) must maintain a minimum separation of 8 feet. Eaves on adjacent two-story houses must maintain a minimum separation of 10 feet. Non-structural architectural features such as fireplaces, bay windows and pop-outs will be permitted to encroach 2 feet into the side yard setbacks. Patio covers will not be permitted to encroach into side yard setbacks.

C. **Corner Side Setbacks:** All homes on a corner lot must maintain a setback of 13 feet on the side abutting the street. Two story homes will not be permitted on corner lots unless they provide for 20-foot side yard setbacks from the street side as measured from the property line, with the addition of mature landscaping to buffer the home from the street.

D. **Rear Setbacks**: All homes except homes that back up to an arterial street must maintain a 15 foot rear yard setback. Patio covers and other non-structural architectural features (fireplaces, bay windows, pop-outs, etc.) will be allowed to encroach into the rear setback. Patio covers may not encroach more than 10 feet into the rear yard setback.

E. **Project Entry**: Provide a sense of neighborhood arrival through design of the entry street intersecting the arterial or major collector, featuring such elements as monument signing, special decorative landscaping, specialty pavement, enhanced fence wall details, immediate entrance into open space/trail system, etc.

F. **Setbacks Adjacent to an Arterial Street**:

a. All single-story homes adjacent to an arterial street shall have a rear yard setback of not less than 20 feet.

b. All two-story homes adjacent to an arterial street shall have a rear yard setback of not less than 25 feet. If any portion of a two-story house is single-story adjacent to the arterial street, then the single-story setbacks (i.e. 20 feet) will apply to the single-story portion of the house.

c. The rear yard setback for adjacent lots will be staggered a minimum of 5 feet. Examples of this are: (1) If two single-story houses are adjacent the rear yard setback on one of the houses will be a minimum of 25 feet. (2) If two two-story houses are adjacent to each other then one of the houses would require a rear setback of 30 feet. (3) If a two-story house is adjacent to a single-story house then no additional setback will be required on either house.

d. If a home sides onto an arterial street, then the required wide side setback shall be place on the side adjacent to the arterial street and the width of the wide side setback will be increased by 5 feet. For example, if a house is required to have an 8 foot and a 5 foot setback then the wide side setback will be increased to 13 feet (the normal 8 foot wide side setback plus 5 additional feet.) This lot would then have side yard setbacks of 13 feet plus 5 feet.

e. The applicant will have the choice of increasing the landscaped tract located between the property line of the lots adjacent to the arterial street and the arterial street right of way to an average of 15 feet. The narrowest part of the tract may not be less than 10 feet and at least 50% of the lineal distance of the tract may not be less

than 15 feet. If the applicant makes this election, the standard rear yard setbacks provided in Item D will apply.

f. Patio covers and other non-structural elements (fireplaces, bay windows, pop-outs and etc.) will be allowed to encroach into the rear yard setbacks. Patio covers may not extend to point closer than 10 feet to the rear property line for single story homes or 15 feet for two story homes.

G. **Staggered Perimeter Fences**: Provide staggers or other breaks to relieve the linear character of perimeter fence walls adjoining arterial streets.

H. **Diversity of Elevations**: No homes shall have the same elevation, roof line, or color scheme as those built immediately to either side or directly across the street.

I. **Variety of Rooflines**: For homes backing up to Arterial and Collector Roads, the rear elevations on adjacent homes shall incorporate geometric roof line variation. No more than two consecutive homes may have the same roof line.

K. **Variation of Housing Product**: Each Lot Category shall provide a minimum of five distinctly different floor plans, with a minimum of three elevations for each floor plan. Additionally, each floor plan must have, as an option on one elevation, a front porch or courtyard that is at least 5 feet deep and 8 feet wide.

L. **Required Open Space:** Open space shall include the following items: (1) retention areas; (2) any tract deeded to a Homeowners Association for maintenance, other than private streets; (3) power line corridors (if improved and maintained by a Homeowners Association); (4) lakes; (5) golf courses and (6) public school sites (if deeded to the school and not simply reserved for possible future use). Other areas may be counted as open space if the applicant demonstrates that they provide a recreational or intrinsic benefit to either the community or the project. The minimum amount of open space required within a single-family residential development will be calculated by multiplying the Gross Acreage by ten percent (10%).

DESIGN LIST B–*Subdivision Design Options*

Rancho Gabriela, as revised, complies with the following Options:

A. For each 40 Gross Acres included in the Project, provide at least three cul-de-sacs (or other street feature such as a knuckle or single-loaded street) with a diversity feature such as a landscaped island, access to common open space, etc.

B. **Option One**: Increase the width of all corner lots to a minimum width that is at least 10 feet greater than the Minimum Lot Frontage required in Table A for all Lot Categories.

Option Two: All homes constructed on a corner lot are required to put an 8 foot wide landscaped tract to be placed on the side of each corner lot between the right-of-way and the property line of the lot. The applicant will be: 1) required to dedicate the tract to a Homeowner's Association who will maintain the tract; and 2) landscape the tract and the adjacent right-of-way in a manner similar to other Homeowners Association maintained common areas in the project.

E. Stagger the front yard setbacks to achieve a minimum range of 6 feet in Lot Categories A, B, C, D and E to achieve 18 foot, 21 foot and 24 foot setbacks. Garages shall be subject to the minimum 18 foot setback to the front of the garage.

F. Provide retention areas that meander through the project as a greenbelt, rather than a single rectangular basin.

G. Provide landscaped open spaces visible from arterial street view as well as from residential street view.

H. Along arterial roads, provide an average of 600 feet per mile of open space along the arterial road, dispersed across the length of the property adjacent to the arterial road.

I. (1) Provide a minimum 6 foot separation between the curb and the sidewalk on all arterial and collector streets, and install a 6 foot wide sidewalk. (2) Install a raised landscaping median, which will be maintained by the Homeowners Association. (3) Plant enhanced landscaping along the sidewalk along arterial streets with a canopy tree planted every 50 feet on both sides of the sidewalk. The trees on opposite sides of the sidewalk should be offset to give the appearance that the trees are planted 25 foot on center. 50% of the trees must be a minimum of 24-inch box trees. Applicant will be required to install the items of both

halves of the street if the Applicant owns both halves of the street and one half if Applicant only owns one half. If the Applicant installs any of these items on the half of the street not owned by the Applicant, then Applicant will receive double Points for each such items installed by the Applicant. If the Applicant does not own both sides of the street, then the Applicant shall have the right to deposit with the City the estimated cost of installing its half of the landscaped median and receive the same point credit as if the Applicant had installed the landscaped median.

K. Lots should not be designed to center on major T intersections. Applicant may choose at T intersections to either: (1) provide landscaped open space to be maintained by a Homeowners Association across from the street that stops at the intersection at least as wide as the paving section of the street that stops at the intersection; (2) side lots on the intersection across from the street that stops at the intersection; or (3) back lots across the street from the street that stops at the intersection and install an eight foot wide landscape tract to be maintained by a Homeowners Association behind the lots.

L. Allow access from adjacent non-residential areas, including schools, by incorporating fence and landscape penetrations into the pedestrian circulation element. This access shall be for pedestrian traffic only, and shall be a 30 feet minimum width tract to be dedicated to a Homeowners Association. A pedestrian trail to accommodate both pedestrian and bicycle traffic will be installed in the tract along with landscaping and low height lights. Vehicular traffic inhibitors such as bollards, maze gates, etc. will be installed at both ends of the tract.

N. Make special consideration of the bicyclist and pedestrian throughout the development, providing for paths and trails, separate from roadways, that connect all open space areas as well as arterial roadways.

O. Utilize decorative hardscape features at the entrance to each subdivision, and include decorative hardscape at any pedestrian crossing within the development, such as along arterial roads, collector roads, or trail system crossings within the development.

Q. On Perimeter Theme Walls, provide berms, tree lines, hedgerows, and other means of breaking up perimeter walls. Such features must be in addition to open space areas along the perimeter and enhanced architectural features on the theme wall. If such improvements are made, the applicant shall be permitted to construct 7-foot walls on the perimeter theme walls adjacent to arterial roadways.

DESIGN LIST C–*Production Home Builder Design Options*

Rancho Gabriela, as revised, complies with the following Options:

A. Prohibit the same front elevation on adjoining home products; prohibit the same rear elevations on more than two consecutive adjoining homes visible from arterial street view.

B. De-emphasize garage fronts as the most prominent architectural feature of the dwelling front, e.g. incorporate side access garages, in-line garages, L-shaped floor plans, etc.

C. Provide a minimum of three floor plans that incorporate, in at least two elevations, covered front entries, covered front porches, enhanced door and window details, roof overhangs, parapet walls with cap features, etc.

D. Provide at least three distinct roofing colors, textures, and component shapes, e.g. barrel tile and flat concrete tile.

G. Extend all front architectural treatments to the sides of the home as well, including all fascia treatments such as stone veneer, tile insets, and recesses, etc. Treatment should extend 6 feet or to the side yard fence return, whichever is less.

H. The area of the garage door shall be limited to 45 percent for houses for houses 40 feet wide or less, and 40 percent for all other houses of the front elevation plane on all garages that directly face the street (i.e., that don't meet the angle criteria in Design List B, Item G). Points also given if the garage is recessed greater than 6 feet from the front of the home.

J. Builder installed front yard landscaping on all Lots in Lot Categories A, B and C. Must include a variety of landscaping choices (desert, turf, etc.). No two adjacent yards alike unless part of a master-landscaping theme approved by Staff.

DESIGN LIST D–*Amenity Package Options*

Rancho Gabriela, as revised, complies with the following Options:

A. Provide a trail system that connects all open space areas within the development and creates pedestrian linkages with surrounding developments, including commercial developments. Along these trail systems, rest areas shall be provided every quarter of a mile along the trail, which must consist of some sort of substantial seating area to accommodate at least 4 persons and a shade area, either an architectural shade structure or a combination of architectural features and mature landscaping including canopy trees for shade.

C. Provide outdoor active recreational opportunities such as full court basketball courts, tennis courts, volleyball courts, and other substantial adult recreational opportunities determined to be adequate to serve the needs of the neighborhood.

E. Provide a large open space corridor, minimum of 75 feet wide and an average of 100′ wide, through the development with natural planting and mature trees, which provides for view corridors and a natural trail system. This large open space area will also provide opportunity for lots to back up and take advantage of view fences and view corridors. View fences should only be required on one side of the corridor. The view fences may either be completely wrought iron or wrought iron and masonry that complies with pool fence codes. The corridor is limited to pedestrian access only and should be restricted to project residents.

RECEIVED JSK
JUN 21 1999
ACTION 83057.005

MILLER LASOTA & PETERS PLC

Tel 602 248 2900
Fax 602 248 2999
5225 North Central Ave.,Ste 235
Phoenix, Arizona 85012
azgovrel@aol.com

Of counsel:
Munger Chadwick, PLC
Tucson, Arizona

June 18, 1999

VIA FACSIMILE - 583-1084 AND U.S. MAIL

Mr. Paul Cragan, City Attorney
City of Surprise
12425 West Bell Road
Surprise, AZ 85374

Dear Paul:

I have been directed to inform the City of Surprise that the Dysart District has no objection to the proposed Rancho Gabriela development. If you need anything else from me on this point, please let me know.

Sincerely,

Donald M. Peters

DMP/jp

cc: Jay Kramer
Fennemore Craig

DONATION AGREEMENT

THIS DONATION AGREEMENT (this "Agreement") is made as of this 23rd day of June, 1999 by and between **DYSART UNIFIED SCHOOL DISTRICT NO. 89 OF MARICOPA COUNTY, ARIZONA,** a political subdivision of the State of Arizona (the "**District**"), and **BIG RED LAND INVESTMENTS, INC.,** an Arizona corporation, its successors-in-ownership and assigns ("**Developer**").

RECITALS:

A. Developer owns certain real property in Surprise, Arizona (the "**City**"), commonly known as Rancho Gabriela and more particularly described in Exhibit "A" attached hereto and incorporated herein by this reference (the "**Property**"). Developer intends to develop the Property as a planned community in accordance with Rancho Gabriela P.A.D. 98-108 and a Development Agreement between Developer and the City (collectively, the "**PAD Plan**").

B. The proposed development of the Property will increase the population of students attending elementary, junior high school, and high school within the District and the District is requesting financial contributions from Developer to insure the accommodation of additional students attending such schools.

C. It is difficult for the District to timely acquire, develop, construct and/or improve public school facilities to accommodate the increasing number of students within the District and it is important to the marketing of the Property that the District maintains sufficient public school facilities to accommodate the anticipated growth.

D. The District may consider in the future building a public school on the Property and desires that the Developer reserve for up to two (2) years from recordation of the first final subdivision plat of the Property an approximate fifteen (15) acre school site generally as shown on the PAD Plan.

E. The District and Developer desire to enter into this Agreement in order to specify certain agreements and conditions relating to Developer donating funds to the District.

AGREEMENT:

NOW, THEREFORE, in consideration of the premises and other good and valuable consideration, the receipt and sufficiency of which are hereby acknowledged, the District and Developer, intending to be legally bound, agree as follows:

1. Payment of Donation by Developer to the District. Subject to the terms and conditions of this Agreement, Developer, for itself and its successors-in-ownership and assigns, including, without limitation, any affiliate of Developer and any homebuilder initially constructing single family residential units on the Property (a "**Dwelling Unit**"), agrees to pay to the District $300.00 for each Dwelling Unit initially constructed on the Property ("**Donation**"). The homebuilder shall contribute all Donations as required under this Paragraph 1 no later than 10 days

after the building permit for construction of the particular Dwelling Unit is issued by the City. All Donations shall be submitted to the District at the address listed in Paragraph 9 below. No Donation shall be payable in connection with any reconstruction or subsequent construction of a Dwelling Unit on a particular portion of the Property after the Donation for such portion of the Property has been initially paid.

2. Use. The District agrees to use all Donations for the sole purpose of facilitating the acquisition, development, construction, improvement and/or operation of public school facilities within the District, and for no other purpose without the prior written consent of Developer. A condition of Developer's agreement to continue making the Donations is that, within 10 days following any request by Developer for an accounting which details the uses to which prior Donations have been put, the District will provide such an accounting.

3. School Site Reservation. Developer will reserve for the District the public school site more particularly described in the PAD Plan (the "**School Site**") for two (2) years from recordation of the first final subdivision plat of the Property (the "**Reservation Termination Date**"). Neither Developer nor any of its successors-in-ownership or assigns shall be required to donate to the District the School Site or any other portion of the Property. In the event that the School Site has not been purchased by the District on or before the Reservation Termination Date, Developer shall be entitled to develop the School Site for any use permitted by the City (and, subject to Developer's obligations under Paragraph 1 above, the District will not oppose any required amendment to the PAD Plan) or sell, transfer or convey the School Site, in either case free and clear of any restriction, claim or encumbrance in favor of the District.

4. Future Development Fees. The parties acknowledge that Developer's contribution of the Donations to the District in accordance with the terms and conditions of this Agreement are intended to satisfy any and all obligations of Developer (in connection with Developer's development of the Property) to facilitate the acquisition, development, construction, improvement and operations of any and all public school facilities within the District and to address the anticipated impact of Developer's development of the Property on the District. Notwithstanding any provision in this Agreement to the contrary, if at any time in the future, any federal, state, county, municipal or other governmental or quasi-governmental authority with jurisdiction over the Property imposes any development fee, impact fee, dedication requirement, exaction or similar fee or charge on the Property (individually, a "**Development Fee**" and collectively, the "**Development Fees**") through the exercise of either its police power or its taxing power (other than secondary real estate taxes, general obligation bonds and school district override elections) in connection with or related to the acquisition development, construction, improvement and operation of public school facilities within the District, then either or both of the following shall be applicable:

(a) If the Development Fee for a Dwelling Unit is greater than the Donation for such Dwelling Unit, the Development Fee shall be deemed to satisfy Developer's obligations under Paragraph 1 and no Donation shall be due and payable by Developer to the District (but the remainder of this Agreement shall continue in full force and effect); or

(b) If the Development Fee for a Dwelling Unit is less than the Donation for such Dwelling, Developer will receive a credit against the Donation in the amount of the Development Fee and Developer shall only be obligated to pay the District an amount equal to the difference between the Development Fee and the Donation.

5. Effectiveness of Agreement. This Agreement shall not be effective and shall not inure to the benefit of or bind Developer or the District or their successors-in-ownership and assigns unless and until the PAD Plan has been properly approved by the applicable governmental authority and any all ordinances and resolutions approving the PAD Plan are final and non-appealable. It is a condition to the continuing effectiveness and enforceability of this Agreement that, with regard to the Property, the District has not opposed any amendments to the PAD Plan or any other zoning or entitlement application or request of Developer or its successors-in-ownership and assigns (and the District has provided the governmental authority with such written confirmation thereof as requested by the governmental authority).

6. The District's Representations and Warranties. The District represents and warrants to Developer, which constitute a material part of the consideration hereunder, as follows:

(a) The District is a political subdivision of the State of Arizona, duly organized, validly existing and in good standing under the laws of the State of Arizona.

(b) The District has the power and authority to enter into and to perform its obligations under this Agreement. The execution and delivery of this Agreement and performance by the District of its obligations under this Agreement have been duly authorized by all necessary action.

(c) This Agreement has been duly executed and delivered by the District and constitutes the legal, valid and binding obligations of the District, enforceable against the District in accordance with its terms.

(d) The execution and delivery of this Agreement and the performance of the terms herein by the District (i) will not conflict with or result in a violation of any applicable Arizona law or rule affecting the District; (ii) will not conflict with or result in a violation of any judgment, order or decree of any court or governmental agency of the State of Arizona to which the District is a party or by which it is bound; (iii) will not violate the terms of any instrument, document or agreement, to which the District is a party or by which it or any of its property is bound, or (iv) conflict with, result in a breach of or constitute a default under any such instrument, document or agreement to which the District is a party or by which it or any of its property is bound.

(e) No consent, license, approval or authorization of any governmental authority, bureau or agency is required in connection with the execution, delivery, performance, validity and enforceability of this Agreement by or against the District, except those that have previously been obtained.

7. Developer's Representations and Warranties. Developer represents and warrants

to, and acknowledges that, the District, which constitute a material part of the consideration hereunder, as follows:

(a) Developer is a corporation, duly organized, validly existing and in good standing under the laws of the State of Arizona.

(b) Developer has the corporate power and corporate authority to enter into and to perform its obligations under this Agreement. The execution and delivery of this Agreement and performance by Developer of its obligations under this Agreement have been duly authorized by all necessary action.

(c) This Agreement has been duly executed and delivered by Developer and constitutes the legal, valid and binding obligations of Developer, enforceable against Developer in accordance with its terms.

(d) The execution and delivery of this Agreement and the performance of the terms herein by Developer (i) will not conflict with or result in a violation of any applicable Arizona law or rule affecting Developer; (ii) will not conflict with or result in a violation of any judgment, order or decree of any court or governmental agency of the State of Arizona to which Developer is a party or by which it is bound; (iii) will not violate the terms of any instrument, document or agreement, to which Developer is a party or by which it or any of its property is bound, or (iv) conflict with, result in a breach of or constitute a default under any such instrument, document or agreement to which Developer is a party or by which it or any of its property is bound.

(e) No consent, license, approval or authorization of any governmental authority, bureau or agency is required in connection with the execution, delivery, performance, validity and enforceability of this Agreement by or against Developer.

(f) The District intends to rely upon the promises made in this Agreement in formulating its plans for growth and in many other regards and such reliance is reasonable, and the District shall have the right to enforce the agreements made by Developer in this Agreement in any manner permitted by applicable law.

8. Default and Remedies. In the event of any default under this Agreement, the non-defaulting party shall have all rights and remedies provided at law or in equity, including, without limitation, specific performance and injunctive relief. Developer acknowledges that the District intends to rely upon the promises and agreements made in this Agreement in formulating its plan for growth and in many other regards. Developer acknowledges that such reliance by the District is reasonable. Developer agrees that the District shall have the right to enforce the promises and agreements made by Developer in this Agreement in any manner permitted by applicable law.

9. Notices. Any and all notices, consents or other communications required or permitted by this Agreement shall be given in writing and telecopied, personally delivered, sent by registered or certified mail, return receipt requested, postage prepaid, or sent by Federal Express, Airborne, U.P.S. or other similar nationally recognized overnight courier, addressed as follows:

To Developer:	Big Red Land Investments, Inc. c/o Stardust Development, Inc. 6730 N. Scottsdale Road, Suite 230 Scottsdale, Arizona 85253 Attn: Mr. Robert C. Speirs Fax: (602) 607-5801
With a copy to:	Fennemore Craig 3003 North Central Avenue Suite 2600 Phoenix, Arizona 85012-2913 Attn: Jay S. Kramer Fax: (602) 916-5541
To the District	Dysart Unified School District of Arizona No. 89 11405 North Dysart Road El Mirage, Arizona 85338 Attn: Superintendent Fax: (623) 876-7042
With a copy to:	Donald M. Peters, Esq. Miller LaSota & Peters, PLC 5225 North Central Avenue Suite 235 Phoenix, AZ 85012-1452 Fax: (602) 248-2999

or at any other address or telecopier number designated by any party hereto in writing. Any notice or communication shall be deemed to have been delivered and received (i) as of the date of receipt, if sent by telecopier (with written confirmation of error-free transmission) on or before 5:00 p.m., Phoenix time, (ii) as of the next day after receipt, if sent by telecopier (with written confirmation of the date and time of transmissions and receipt) after 5:00 p.m., Phoenix time; (iii) the date of delivery, if hand delivered or sent by nationally recognized overnight courier; (iv) 3 days after the date of mailing.

10. General.

(a) Waiver. No delay in exercising any right or remedy shall constitute a waiver thereof, and no waiver by the District or Developer of the breach of any covenant of this Agreement shall be construed as a waiver of any preceding or succeeding breach of the same or any other covenant or condition of this Agreement.

(b) Attorneys' Fees. In the event either party finds it necessary to bring any action at law or other proceeding against the other party to enforce any of the terms, covenants or conditions hereof, or by reason of any breach or default hereunder, the party prevailing in any such

action or other proceeding shall be paid all reasonable costs and attorneys' fees by the other party, and in the event any judgment is secured by the prevailing party, all such costs and attorneys' fees shall be included therein, with the fees to be set by the court and not by jury.

(c) Counterparts. This Agreement may be executed in two or more counterparts, each of which shall be deemed an original, but all of which together shall constitute one and the same instrument. The signature pages from one or more counterparts may be removed from the counterparts and the signature pages may all be attached to a single instrument.

(d) Further Acts. Each of the parties hereto shall execute and deliver all such documents and perform all such acts as reasonably necessary, from time to time, to carry out the matters contemplated by this Agreement.

(e) Successors and Assigns. All of the provisions of this Agreement shall inure to the benefit of and be binding upon Developer and the District and their successors-in-ownership and permitted assigns. Upon the conveyance of all or any portion of the Property by Developer or its successors-in-ownership or assigns and the assumption by such transferee of the obligations of the Developer hereunder with respect to the portion of the Property conveyed, Developer or its successors-in-ownership or assigns, as the case may be, shall be relieved of any future liability or obligations under this Agreement with respect to the portion of the Property conveyed, but shall not be relieved or released from any liabilities or obligations incurred during the period of its ownership of the Property. Developer and its successors-in-ownership and assigns will endeavor to provide written notice to the District of each conveyance (including the name and mailing address of such purchaser) of all or any portion of the Property (except conveyances of a Dwelling Unit for which the Donation has been paid), but failure to provide such notice shall not affect the validity or enforceability of any of the provisions of this Agreement. The rights, privileges, duties, obligations and liabilities under this Agreement shall be enforceable at law and in equity. The liabilities and obligations of Developer and its successors-in-ownership and assigns are several obligations, and not joint and several obligations, and may only be enforced against the owner of the Property then in default, and, notwithstanding any default by the owner of a portion of the Property, this Agreement shall remain in full force and effect with respect to the other owners of the Property.

(f) No Partnership and Third Parties. It is not intended by this Agreement to, and nothing contained in this Agreement shall, create any partnership, joint venture or other similar arrangement between Developer and the District. No term or provision of this Agreement is intended to, or shall, be for the benefit of any person, firm, organization or corporation not a party hereto, and no such other person, firm, organization or corporation shall have any right or cause of action hereunder.

(g) Entire Agreement. This Agreement constitutes the entire agreement between the parties hereto pertaining to the subject matter hereof. All prior and contemporaneous agreements, representations and understandings of the parties, oral or written, are hereby superseded and merged herein.

(h) Amendment. No change or additions may be made to this Agreement except by a written amendment executed by the parties hereto.

(i) Governing Law. This Agreement shall be governed by, and construed and interpreted in accordance with, the laws of the State of Arizona.

(j) Conflicts of Interest. The parties acknowledge that this Agreement is subject to cancellation pursuant to A.R.S. § 38-511 or any successor statute.

IN WITNESS WHEREOF, the parties have executed this Agreement the day and year first above written.

DISTRICT:

DYSART UNIFIED SCHOOL DISTRICT NO. 89 OF MARICOPA COUNTY, ARIZONA, a political subdivision of the State of Arizona

By: Robert F. Koch
Name: Robert F. Koch
Title: Governing Board President

DEVELOPER:

BIG RED LAND INVESTMENTS, INC., an Arizona corporation

By:_____
Name:_____
Title:_____

IN WITNESS WHEREOF, the parties have executed this Agreement the day and year first above written.

DISTRICT:

DYSART UNIFIED SCHOOL DISTRICT NO. 89 OF MARICOPA COUNTY, ARIZONA, a political subdivision of the State of Arizona

By:_____
Name:_____
Title:_____

DEVELOPER:

BIG RED LAND INVESTMENTS, INC., an Arizona corporation

By: C. R. Hess
Name: CHAS R. HEESH
Title: Secretary/Treasurer

EXHIBIT "A"

LEGAL DESCRIPTION
RANCHO GABRIELA

THE SOUTHEAST QUARTER OF SECTION 17 AND SECTION 20, TOWNSHIP 3 NORTH, RANGE 1 WEST OF THE GILA AND SALT RIVER BASE AND MERIDIAN, MARICOPA COUNTY, ARIZONA.

APPLICATION NO. PADA 03- 340
1st ADDENDUM
RANCHO GABRIELA
MINOR AMENDMENT TO PAD
AMENDMENT NARRATIVE
October 21, 2003

The Rancho Gabriela Planned Area Development, located within Section 20, Township 3 North, Range 2 and the southeast quarter of Section 17 Township 3 North, Range 2 West of the Gila and Salt River Base and Meridian, Maricopa County, Arizona, bounded by Cactus Road and Sweetwater Avenue to the north, Peoria Avenue to the south, Bullard Avenue to the east and Reems Road to the west was approved by the City of Surprise City Council on November 13, 2000. This is the first addendum to the original PAD.

The overall project is comprised of a mixture of industrial, commercial, multi-family, and single-family residential uses and open space, which includes right-of-way landscaping and a project-wide trail system corridor.

This request is for a minor amendment to the approved PAD to establish development standards for potential Z-Lot residential subdivision configurations within the parcels designated "R-2 PAD". The development standards for a Z-Lot configuration will only apply to parcels 11 and 17 of the Rancho Gabriela development and must be adhered to with the implementation of a Z-Lot subdivision. The development standards for any other form of subdivision must meet the standards prescribed within Section 11 of the Rancho Gabriela PAD. Exhibit A, attached hereto, describes the Z-Lot development standards and provides a typical Z-lot layout.

This change is not considered major and will be a minor amendment subject to approval by the Community Development Director and the City Manager.

APPROVED

Community and Economic Development Director

APPROVED

City Manager or Designee

CITY OF SURPRISE
PLANNING AND ZONING DEPARTMENT
APPROVED
Case No.: PADA03-340
P.Z. Comm. Approval:
City Council Approval:
P.D.A. Approval: Admin Approval 11/14/2003
Conditions:

Exhibit A

Z-Lot Development Standards

Front Setback [1]	12 Feet
Interior Side Setback [1]	5 Feet
Rear Setback [2]	20 Feet
Street Side Setback [1]	20' Min.
Minimum Lot Area	4,000 square feet
Minimum Lot Width	40 Feet
Minimum Lot Depth	85 Feet
Maximum % Building Coverage	45
Maximum Building Height	30 Feet

1) Encroachments into front and side yard setbacks will be regulated by Section 17.29.010G of the Surprise Zoning Ordinance.
2) Patio covers may encroach into the rear setback, provided however, that the patio cover may not extend to a point closer than ten feet from the rear property line for a single-story house or structure, or fifteen feet from the rear property line for a multi-story house or structure.

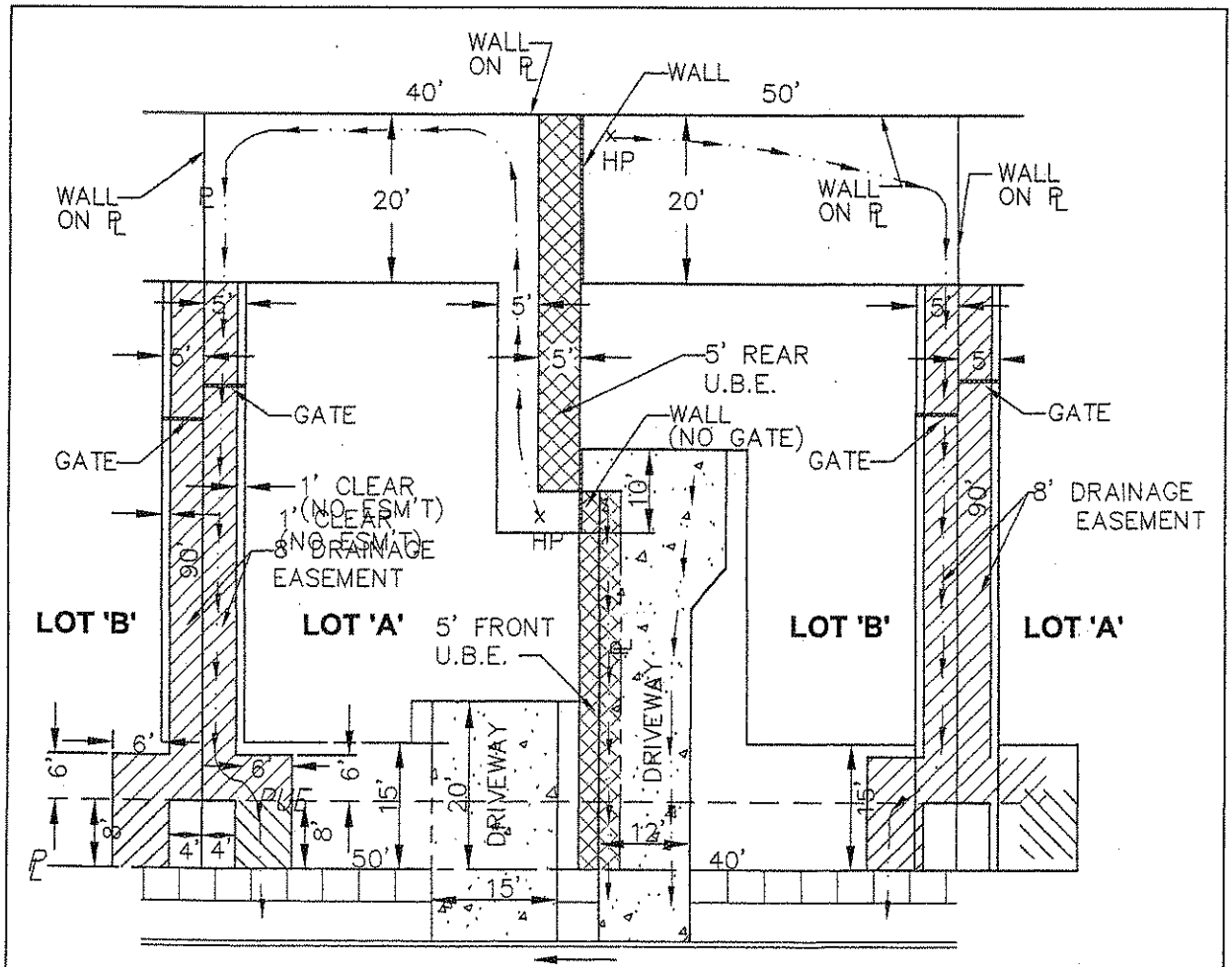

TYPICAL "Z-LOT"/DRAINAGE LAYOUT

N.T.S.

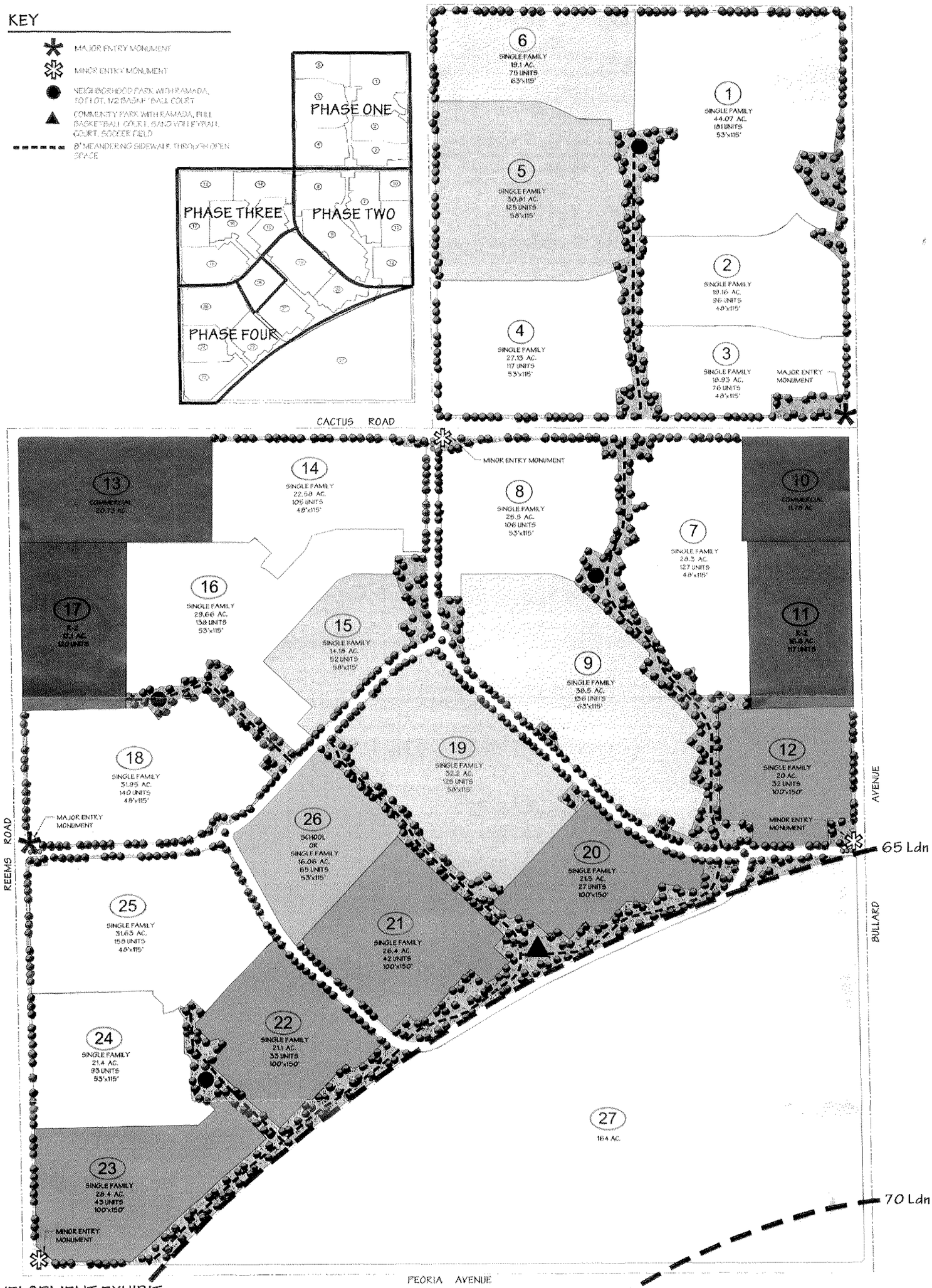

DEVELOPMENT EXHIBIT

RANCHO GABRIELA

LAND PLAN PREPARED BY: URBAN CONCEPTS
PREPARED FOR: STARDUST DEVELOPMENT

NORTH
1"=200'-0"
6-13-00
RANCHO

urban concepts
Planning & Urban Design
Landscape Architecture
P.O. Box 13313
Scottsdale, AZ 85267-3313
(480) 483-0244
Fax (480) 483-1522

f2 GROUP
Landscape Design - Irrigation Systems
Native Plant Analysis - Tree Design
P.O. Box 12111 Chandler, AZ 85248
Phone 480-792-0175 Fax 480-895-1099
E-mail f2group@aol.com

RECEIVED
JUN 23 2000
CITY OF

CITY OF SURPRISE
PLANNING AND ZONING DEPARTMENT
APPROVED

Case No.: PADA05-031

P&Z Comm. Approval:

City Council Approval: 6/9/05

B.O.A Approval: 08D05-21

Stipulations:

(*) Approved the contract with **3DI Inc.** for Restroom Facilities located on the 8-acre Multi-purpose Field at the Surprise Recreation Campus, in the total amount not-to-exceed $199,636.32.

(*) Approved entering into a contract (#COS05-023) with **Femcon, Inc.** to replace Building D HVAC and Electrical Systems, in the total amount not-to-exceed **$ 409,638.00.**

(*) Approved **Resolution No. 05-92**; A Resolution approving Maricopa Home Consortium Intergovernmental Agreement.

(*) Approved **Resolution No. 05-96**; A Resolution approving the Street Light Improvement District for Surprise Farms Phase III.

(*) Approved **Resolution No. 05-102;** A Resolution altering the speed limit to 45 Miles per hour from 35 miles per hour, 40 miles per hour and 50 miles per hour on Waddell road between Litchfield Road and Sarival Road for both directions of travel and between Dysart Road and Litchfield Road for the westbound direction only.

CONSENT ITEMS REMOVED FOR DISCUSSION AND CONSIDERATION:

(*) Approved the **minutes** of the Regular City Council Works Session and Regular City Council Meeting of May 12, 2005 and the Special City Council Meeting of May 31, 2005 – **APPROVED.**

Councilmember Bails asked that this item be removed from the Consent Agenda so that she could abstain from voting since she was not present for the May 12, 2005 due to being out of town.

Councilmember Sullivan made the motion to approve the Regular City Council Works Session and Regular City Council Meeting of May 12, 2005 and the Special City Council Meeting of May 31, 2005. Councilmember Johnson seconded the motion. Six yes votes, one abstained (Bails). Motion carried.

(*) Approved the final reading of **Ordinance No. 05-21;** An Ordinance approving Planned Area Development for Rancho Gabriela, consisting of Changing the Zoning of approximately 21 acres from Planned Area Development (Industrial) to Planned Area Development (C-2 Commercial) generally located on the Northwest corner of Peoria Avenue and Bullard Avenue. – APPROVED.

Councilmember Johnson asked that this item be removed to make the statement for the record that this development contains a limited amount of industrial.

Vice-Mayor Arismendez made the motion to approve **Ordinance No. 05-21;** An Ordinance approving Planned Area Development for Rancho Gabriela, consisting of Changing the Zoning of approximately 21 acres from Planned Area Development (Industrial) to Planned Area Development (C-2 Commercial) generally located on the Northwest corner of Peoria Avenue and Bullard Avenue. Councilmember Elkins seconded the motion. Seven yes votes. Motion carried.

(*) Approved participating in the **MAG 2005 Census Survey** and payment of costs – **APPROVED.**

Shelley H. #6

SURPRISE
ARIZONA

CITY OF SURPRISE
COUNCIL AGENDA ACTION FORM

Meeting Type: Regular Meeting

Council Meeting Date: June 9, 2005

Submitting Department: CDD

Contact Person: Robert Millspaw

District: 3

Internal:

☒ Consent Regular Public Hearing ☐ Report Only

Agenda Wording:

Consideration and action on Ordinance #05-21, an ordinance approving the Planned Area Development Amendment PADA05-037 for a property known as Rancho Gabriela, consisting of changing the zoning of approximately 21 acres from Planned Area Development (Industrial) to Planned Area Development (C-2 Commercial). Subject site is generally located on the northwest corner of Peoria Avenue and Bullard Avenue.

Motion:

I move to approve Ordinance #05-21.

Background:

The Planning and Zoning Commission unanimously recommended approval of this application on April 19, 2005.

Financial Impact Statement:

Additional new development will have long term financial implications for the City of Surprise.

Attachments:

Staff Report, Ordinance#05-21, Stipulations of Approval

Signatures of Submitting Officers:

Mayor / Council	Department Head/Designee	Legal Review
Budget Authorization	City Manager/Designee	Human Resources (If Applicable)

City Clerk's Office Only:

Council Action: Motion/Second		Results:		Distribution After Council Meeting:
Shafer		For	7	
Johnson		Against	~~0~~	City Clerk's Office
Bails		Passed	✓	Shelly H.
Sullivan		Failed		
Arismendez	M	Continue		
Elkins	S	Tabled		
Allen		Absent		

final 6-16-05 reading

Meeting Requirements:

☐ Powerpoint ☒ Overhead (Elmo) ☐ Flip Chart ☐ White Board ☐ Easel

Presentation Speaker Names (spelling and titles for TV captions):

Robert Millspaw, Planning Manager

ORDINANCE #05-21

AN ORDINANCE OF THE MAYOR AND COUNCIL OF THE CITY OF SURPRISE, ARIZONA, APPROVING THE PLANNED AREA DEVELOPMENT AMENDMENT, PADA05-037, FOR A PROPERTY KNOWN AS RANCHO GABRIELA, CONSISTING OF CHANGING THE ZONING OF APPROXIMATELY 21 ACRES FROM PLANNED AREA DEVELOPMENT (INDUSTRIAL) TO PLANNED AREA DEVELOPMENT (C-2 COMMERCIAL). SUBJECT SITE IS GENERALLY LOCATED ON THE NORTHWEST CORNER OF PEORIA AVENUE AND BULLARD AVENUE.

WHEREAS, this Ordinance has been properly noticed for public hearing and the necessary hearings and opportunity for public input have been completed, and;

WHEREAS, changes have occurred in the vicinity of Section 20, Township 3 North, Range 1 West, of the Gila and Salt River Base and Meridian, Maricopa County, Arizona, which require that the zoning of the subject parcel of land in that area be changed, and;

WHEREAS, rezoning of the subject property will not cause traffic congestion or depreciate surrounding property values and, at the same time, is in keeping with the purposes and intent of the zoning ordinance, the plan for the area, and the Surprise General Plan 2020.

NOW, THEREFORE BE IT ORDAINED by the Mayor and Council of the City of Surprise, that:

Section 1. This Ordinance is not of a general and permanent nature and shall not be codified.

Section 2. The property described in Exhibit A is rezoned from Planned Area Development Industrial to Planned Area Development C-2 with a development plan. The subject property now may be developed with either Industrial Uses specified in the Rancho Gabriella PAD, or C-2 zoning land uses as identified in the Surprise Municipal Code.

Section 3. The development plan for the property described on Exhibit B, entitled "Rancho Gabriella PAD Amendment # 1," date stamped April 14, 2005, as application PADA05-37, a copy of which is on file in the Community Development Department, is approved.

Section 4. All present and future owners of the property described on Exhibit A shall develop the property only in accordance with the requirements of the Austin Ranch PAD, and in compliance with the Stipulations contained in Exhibit C.

Section 5. The applicant, or subsequent owner shall submit a map of dedication for the property or a portion thereof within twelve (12) months from the date the ordinance is approved. In the event the above does not occur within their respective time periods, the City Council shall take the appropriate action to revert the zoning being approved with this Ordinance.

Section 6. This ordinance shall become effective thirty-one (31) days after formal passage by the council.

PASSED AND ADOPTED this 9th day of June, 2005.

Joan Shafer, Mayor

ATTEST:

Sherry Aguilar, City Clerk

APPROVED AS TO FORM:

City Attorney

Yeas: Mayor Shafer, Vice-Mayor Arismendez, Council Members; Bails, Elkins, Foro, Johnson & Sullivan.

Nays: _____

LEGAL DESCRIPTION
RANCHO GABRIELA
COMMERCIAL PARCEL @ NW CORNER OF
BULLARD ROAD & PEORIA AVENUE

That portion of Lot 2, PARKWAY CHRISTIAN CHURCH, according to the plat of record in the office of the County Recorder of Maricopa County, Arizona recorded in Book 708 of Maps, Page 9 of Official Records, being described as follows:

COMMENCING at a 2-inch iron pipe, found at the southeast corner of said Section 20, Township 3 North, Range 1 West of the Gila and Salt River Base and Meridian, Maricopa County, Arizona, from which a 3/4-inch iron bar, found at the south quarter corner of said Section 20, bears North 88°52'08" West, a distance of 2636.00 feet; Thence, from said southeast corner, North 88°52'08" West, along the south line of the southeast quarter of said Section 20, a distance of 1369.36 feet; Thence North 00°00'00" East (due North), a distance of 55.01 feet to a point on the south line of said Lot 2 and the TRUE POINT OF BEGINNING;

Thence North 00°00'00" East (due North), a distance of 670.13 feet, to a point on a line which is 725.0 feet north of and parallel with the south line of the southeast quarter of said Section 20;

Thence South 88°52'08" East, along said parallel line, a distance of 1314.35 feet, to a point on the east line of said Lot 2;

Thence South 00°00'02" West, along the east line of said Lot 2, a distance of 654.13 feet;

Thence South 45°33'57" West, along the east line of said Lot 2, a distance of 22.40 feet to a point on the south line of said Lot 2;

Thence North 88°52'08" West, along said south line, a distance of 1298.35 feet, to the TRUE POINT OF BEGINNING.

Said parcel containing 20.21 acres, more or less.

REGISTERED LAND SURVEYOR
CERTIFICATE NO.
14959
THOMAS J.
LUTE
Date Signed 1-19-06
ARIZONA, U.S.A.

RECOMMENDATIONS: (PADA05-037)

Staff finds that the subject request is consistent with the proposed Surprise General Plan 2020. Furthermore, approval of this request would allow for efficient and orderly development. Therefore, staff recommends that the Planning and Zoning Commission recommend approval of the Planned Area Development (P.A.D.) for Rancho Gabriela (PADA05-037) subject to the following stipulations:

STANDARD STIPULATIONS:

a) Major changes to this P.A.D. with regard to use and intensity, must be processed as a revised application with approval by the City Council upon recommendation of the Planning and Zoning Commission. Minor changes to this P.A.D. may be administratively approved by the City Manager and the Community Development Director;

b) The applicant shall submit a Written Response to Stipulations and five (5) copies of the revised Rancho Gabriela P.A.D. document. Said submission must be under one (1) transmittal package;

c) The applicant, or subsequent owners, shall submit a commercial final plat prior to the submittal of a site plan application for the property;

d) All infrastructure shall be constructed pursuant to the provisions of Section 16.20 of the Surprise Municipal Code or an approved development agreement, whichever applies.

SPECIAL STIPULATIONS:

e) Because the property is located within the vicinity of a military airport, the applicant shall comply with the noise attenuation standards adopted by the City;

f) The applicant shall provide the United States Air Force with an avigation easement over the entire property. Such avigation easement shall be approved by the City Attorney, and placed upon the commercial subdivision final plat.

REPORT TO THE PLANNING AND ZONING COMMISSION AND THE CITY COUNCIL

PREPARED BY THE COMMUNITY DEVELOPMENT DEPARTMENT

CASE NO.: PAD05-037 (Rancho Gabriela Planned Area Development Amendment)
STIPULATIONS: *a –f*
PREPARED BY: Desmond McGeough, Planner II @ 623.875.4306

Planning & Zoning Commission Hearing Date: April 19, 2005
City Council Hearing Date: May 12, 2005

APPLICANT:

Earl, Curley & Lagarde, P.C.
3101 N. Central Avenue
Suite 1000
Phoenix, AZ 85012
Contact: Gary King
Phone: 602.265.0094
Fax: 602.265.2195

PROPERTY OWNER:

BIF-Buckeye L.L.C.
6730 N. Scottsdale Road, Suite 230
Scottsdale, AZ 85253

REQUEST:

Approval of a Planned Area Development Amendment for Rancho Gabriela P.A.D. The subject request consists of a change of zone on 20.21 acres of property from Industrial to Commercial.

SITE LOCATION:

The subject site is located at the northwest corner of Peoria Avenue and Bullard Avenue. It is located in Section 20, Township 3 North, Range 1 West, of the Gila and Salt River Base and Meridian, Maricopa County, Arizona.

SITE SIZE:

20.21gross acres.

CONFORMANCE TO ADOPTED LAND USE PLANS:

GENERAL PLAN:

This request is consistent with the Surprise General Plan 2020, which designates this property as "Employment".

DEVELOPMENT PLAN:

The Rancho Gabriela Planned Area Development will incorporate the proposed development plan.

COMMENTING JURISDICTIONS:

Town of Buckeye:	No comments were received.
City of El Mirage:	No comments were received.
City of Peoria:	No comments were received.
Maricopa County:	No comments were received.
Dysart Unified School District:	No comments were received.
Maricopa Water District:	No comments were received.
Luke Air Force Base:	See attached.

DEPARTMENTAL REVIEW:

The **Engineering Department** has reviewed this application and has no additional comments.

The **Fire Department** has reviewed this application and has no additional comments.

The **Public Works Department** has reviewed this application and has no additional comments.

The **Water Services Department** has reviewed this application and has no additional comments.

PLANNING AND ZONING COMMISSION RECOMMENDATION:

The Planning and Zoning Commission recommends that the City Council **approve** the Planned Area Development Amendment for Rancho Gabriela, (PADA05-037), subject to the stipulations listed under "Recommendations."

STAFF RECOMMENDATION:

Staff recommends that the City Council **approve** the Planned Area Development Amendment for Rancho Gabriela, (PADA05-037), subject to the stipulations listed under "Recommendations."

EXISTING AND SURROUNDING ZONING:

1.	ON-SITE:	Industrial (Rancho Gabriela P.A.D.)
	NORTH:	Industrial (Rancho Gabriela P.A.D.)
	EAST:	R1-43/C-2
	SOUTH:	R-43 (Maricopa County)
	WEST:	Industrial (Rancho Gabriela P.A.D.)

EXISTING AND SURROUNDING LAND USE:

2.	ON-SITE:	Vacant Land
	NORTH:	Vacant Land
	EAST:	Vacant Land
	SOUTH:	Vacant Land
	WEST	Single- Family Housing/Vacant Land

ADJACENT ROAD STATUS:

3. Current and Projected Road Status Tables:

Current:

Street Name	Right-of-Way	Pavement Width	Landscaping	# of Lanes in each direction	Sidewalks
Bullard Avenue	65 feet	24 feet	East side	1 lane	East side
Peoria Avenue	33 feet	24 feet	None	1 lane	None

Ultimate Build-Out:

Street Name	Right-of-Way	Pavement Width	Landscaping	# of Lanes in each direction	Sidewalks
Bullard Avenue	110 feet	64 feet	Sides, Median	2 lanes	6' required
Peoria Avenue	130 feet	78 feet	Sides, Median	3 lanes	6' required

EXISTING UTILITIES AND SERVICES STATUS:

4. **WATER** — Arizona-American Water Company

5. **SEWER** — City of Surprise

6. **FIRE PROTECTION** — The Surprise Fire Department currently has a fire station located at 15616 North Hollyhock Street. A second fire station is in operation at 18600 Reems Road, near the intersection of Reems and Mountain View Boulevard.

7. **POLICE PROTECTION** — The Surprise Police Department currently has a station located at 12425 W. Bell Road and a substation located at 18600 Reems Road.

PLAN ANALYSIS:

BACKGROUND

8. The Rancho Gabriela Development PAD was originally approved in July of 2000 (PAD98-107). The PAD development plan encompasses 798 acres of property. Land use within the northern portion of the project includes 635 acres dedicated to residential and commercial land use, and contains a 16-acre school site. The southeasterly 164 acres of the project are located within the 65ldn and are designated as employment.

The underlying general plan land use designation on the 20.21 acres located at the northwest corner of Bullard Avenue and Peoria Avenue is "Employment". The current PAD zoning on the subject property is "Industrial".

PROPOSAL

9. Commercial retail development is an allowable land use in an "Employment" general plan designation. However, a site for commercial retail development cannot exceed 25 acres in an employment designation. With this PAD application, the applicant seeks to establish 20.21 acres of Commercial zoning. Under the PAD amendment request, the subject property could be developed with C-2 (community commercial) or C-3 (general commercial) uses. However, though the PAD amendment, the applicant has also requested that the existing "Industrial" uses be allowed to remain as permitted uses upon the 20.21 acre parcel to provide market flexibility for the parcel. Staff has no objection to the subject request.

NOISE:

10. This property is located within the 65 ldn high noise contour line area. Luke Air Force Base has provided a letter stating no objection to the zoning change from industrial to commercial.

COMMUNITY OUTREACH:

12. The applicant forwarded a letter on March 25th to surrounding property owners. The letter provided information regarding their request to change the designation from industrial to commercial uses. One property owner met with the applicant. No objection to the PAD Amendment request was raised at the meeting. Staff has not received any phone calls or inquiries from the public regarding the zoning change.

CONCLUSION:

13. The subject request will enhance and meet several goals of the General Plan 2020. Also, this proposed P.A.D. amendment will not adversely affect the health, safety, or welfare of the citizens of the City of Surprise.

Shelley H. #6

SURPRISE
ARIZONA

CITY OF SURPRISE
COUNCIL AGENDA ACTION FORM

Meeting Type: Regular Meeting

Council Meeting Date: June 9, 2005

Submitting Department: CDD

Contact Person: Robert Millspaw

District: 3

Internal:

☒ Consent Regular Public Hearing ☐ Report Only

Agenda Wording:

Consideration and action on Ordinance #05-21, an ordinance approving the Planned Area Development Amendment PADA05-037 for a property known as Rancho Gabriela, consisting of changing the zoning of approximately 21 acres from Planned Area Development (Industrial) to Planned Area Development (C-2 Commercial). Subject site is generally located on the northwest corner of Peoria Avenue and Bullard Avenue.

Motion:

I move to approve Ordinance #05-21.

Background:

The Planning and Zoning Commission unanimously recommended approval of this application on April 19, 2005.

Financial Impact Statement:

Additional new development will have long term financial implications for the City of Surprise.

Attachments:

Staff Report, Ordinance#05-21, Stipulations of Approval

Signatures of Submitting Officers:

Mayor / Council	Department Head/Designee	Legal Review
Budget Authorization	City Manager/Designee	Human Resources (If Applicable)

City Clerk's Office Only:

Council Action: Motion/Second		Results:		Distribution After Council Meeting:
Shafer		For	7	
Johnson		Against	~~0~~	City Clerk's Office
Bails		Passed	✓	Shelley H.
Sullivan		Failed		
Arismendez	M	Continue		
Elkins	S	Tabled		
Allen		Absent		

final 6.16.05 reading

Meeting Requirements:

☐ Powerpoint ☒ Overhead (Elmo) ☐ Flip Chart ☐ White Board ☐ Easel

Presentation Speaker Names (spelling and titles for TV captions):

Robert Millspaw, Planning Manager

ORDINANCE #05-21

AN ORDINANCE OF THE MAYOR AND COUNCIL OF THE CITY OF SURPRISE, ARIZONA, APPROVING THE PLANNED AREA DEVELOPMENT AMENDMENT, PADA05-037, FOR A PROPERTY KNOWN AS RANCHO GABRIELA, CONSISTING OF CHANGING THE ZONING OF APPROXIMATELY 21 ACRES FROM PLANNED AREA DEVELOPMENT (INDUSTRIAL) TO PLANNED AREA DEVELOPMENT (C-2 COMMERCIAL). SUBJECT SITE IS GENERALLY LOCATED ON THE NORTHWEST CORNER OF PEORIA AVENUE AND BULLARD AVENUE.

WHEREAS, this Ordinance has been properly noticed for public hearing and the necessary hearings and opportunity for public input have been completed, and;

WHEREAS, changes have occurred in the vicinity of Section 20, Township 3 North, Range 1 West, of the Gila and Salt River Base and Meridian, Maricopa County, Arizona, which require that the zoning of the subject parcel of land in that area be changed, and;

WHEREAS, rezoning of the subject property will not cause traffic congestion or depreciate surrounding property values and, at the same time, is in keeping with the purposes and intent of the zoning ordinance, the plan for the area, and the Surprise General Plan 2020.

NOW, THEREFORE BE IT ORDAINED by the Mayor and Council of the City of Surprise, that:

Section 1. This Ordinance is not of a general and permanent nature and shall not be codified.

Section 2. The property described in Exhibit A is rezoned from Planned Area Development Industrial to Planned Area Development C-2 with a development plan. The subject property now may be developed with either Industrial Uses specified in the Rancho Gabriella PAD, or C-2 zoning land uses as identified in the Surprise Municipal Code.

Section 3. The development plan for the property described on Exhibit B, entitled "Rancho Gabriella PAD Amendment # 1," date stamped April 14, 2005, as application PADA05-37, a copy of which is on file in the Community Development Department, is approved.

Section 4. All present and future owners of the property described on Exhibit A shall develop the property only in accordance with the requirements of the Austin Ranch PAD, and in compliance with the Stipulations contained in Exhibit C.

Section 5. The applicant, or subsequent owner shall submit a map of dedication for the property or a portion thereof within twelve (12) months from the date the ordinance is approved. In the event the above does not occur within their respective time periods, the City Council shall take the appropriate action to revert the zoning being approved with this Ordinance.

Section 6. This ordinance shall become effective thirty-one (31) days after formal passage by the council.

PASSED AND ADOPTED this 9th day of June, 2005.

Joan Shafer, Mayor

ATTEST:

Sherry Aguilar, City Clerk

APPROVED AS TO FORM:

City Attorney

Yeas: Mayor Shafer, Vice-Mayor Arismendez, Council Members; Bails, Elkins, Foro, Johnson & Sullivan.

Nays: _____

LEGAL DESCRIPTION
RANCHO GABRIELA
COMMERCIAL PARCEL @ NW CORNER OF
BULLARD ROAD & PEORIA AVENUE

That portion of Lot 2, PARKWAY CHRISTIAN CHURCH, according to the plat of record in the office of the County Recorder of Maricopa County, Arizona recorded in Book 708 of Maps, Page 9 of Official Records, being described as follows:

COMMENCING at a 2-inch iron pipe, found at the southeast corner of said Section 20, Township 3 North, Range 1 West of the Gila and Salt River Base and Meridian, Maricopa County, Arizona, from which a 3/4-inch iron bar, found at the south quarter corner of said Section 20, bears North 88°52'08" West, a distance of 2636.00 feet; Thence, from said southeast corner, North 88°52'08" West, along the south line of the southeast quarter of said Section 20, a distance of 1369.36 feet; Thence North 00°00'00" East (due North), a distance of 55.01 feet to a point on the south line of said Lot 2 and the TRUE POINT OF BEGINNING;

Thence North 00°00'00" East (due North), a distance of 670.13 feet, to a point on a line which is 725.0 feet north of and parallel with the south line of the southeast quarter of said Section 20;

Thence South 88°52'08" East, along said parallel line, a distance of 1314.35 feet, to a point on the east line of said Lot 2;

Thence South 00°00'02" West, along the east line of said Lot 2, a distance of 654.13 feet;

Thence South 45°33'57" West, along the east line of said Lot 2, a distance of 22.40 feet to a point on the south line of said Lot 2;

Thence North 88°52'08" West, along said south line, a distance of 1298.35 feet, to the TRUE POINT OF BEGINNING.

Said parcel containing 20.21 acres, more or less.

REGISTERED LAND SURVEYOR
CERTIFICATE NO.
14959
THOMAS J.
LUTE
Date Signed 1/18/10
ARIZONA, U.S.A.

RECOMMENDATIONS: (PADA05-037)

Staff finds that the subject request is consistent with the proposed Surprise General Plan 2020. Furthermore, approval of this request would allow for efficient and orderly development. Therefore, staff recommends that the Planning and Zoning Commission recommend approval of the Planned Area Development (P.A.D.) for Rancho Gabriela (PADA05-037) subject to the following stipulations:

STANDARD STIPULATIONS:

a) Major changes to this P.A.D. with regard to use and intensity, must be processed as a revised application with approval by the City Council upon recommendation of the Planning and Zoning Commission. Minor changes to this P.A.D. may be administratively approved by the City Manager and the Community Development Director;

b) The applicant shall submit a Written Response to Stipulations and five (5) copies of the revised Rancho Gabriela P.A.D. document. Said submission must be under one (1) transmittal package;

c) The applicant, or subsequent owners, shall submit a commercial final plat prior to the submittal of a site plan application for the property;

d) All infrastructure shall be constructed pursuant to the provisions of Section 16.20 of the Surprise Municipal Code or an approved development agreement, whichever applies.

SPECIAL STIPULATIONS:

e) Because the property is located within the vicinity of a military airport, the applicant shall comply with the noise attenuation standards adopted by the City;

f) The applicant shall provide the United States Air Force with an avigation easement over the entire property. Such avigation easement shall be approved by the City Attorney, and placed upon the commercial subdivision final plat.

REPORT TO THE PLANNING AND ZONING COMMISSION AND THE CITY COUNCIL

PREPARED BY THE COMMUNITY DEVELOPMENT DEPARTMENT

CASE NO.: PAD05-037 (Rancho Gabriela Planned Area Development Amendment)
STIPULATIONS: a –f
PREPARED BY: Desmond McGeough, Planner II @ 623.875.4306

Planning & Zoning Commission Hearing Date:	April 19, 2005
City Council Hearing Date:	May 12, 2005

APPLICANT:

Earl, Curley & Lagarde, P.C.
3101 N. Central Avenue
Suite 1000
Phoenix, AZ 85012
Contact: Gary King
Phone: 602.265.0094
Fax: 602.265.2195

PROPERTY OWNER:

BIF-Buckeye L.L.C.
6730 N. Scottsdale Road, Suite 230
Scottsdale, AZ 85253

REQUEST:

Approval of a Planned Area Development Amendment for Rancho Gabriela P.A.D. The subject request consists of a change of zone on 20.21 acres of property from Industrial to Commercial.

SITE LOCATION:

The subject site is located at the northwest corner of Peoria Avenue and Bullard Avenue. It is located in Section 20, Township 3 North, Range 1 West, of the Gila and Salt River Base and Meridian, Maricopa County, Arizona.

SITE SIZE:

20.21gross acres.

CONFORMANCE TO ADOPTED LAND USE PLANS:

GENERAL PLAN:

This request is consistent with the Surprise General Plan 2020, which designates this property as "Employment".

DEVELOPMENT PLAN:

The Rancho Gabriela Planned Area Development will incorporate the proposed development plan.

COMMENTING JURISDICTIONS:

Town of Buckeye:	No comments were received.
City of El Mirage:	No comments were received.
City of Peoria:	No comments were received.
Maricopa County:	No comments were received.
Dysart Unified School District:	No comments were received.
Maricopa Water District:	No comments were received.
Luke Air Force Base:	See attached.

DEPARTMENTAL REVIEW:

The **Engineering Department** has reviewed this application and has no additional comments.

The **Fire Department** has reviewed this application and has no additional comments.

The **Public Works Department** has reviewed this application and has no additional comments.

The **Water Services Department** has reviewed this application and has no additional comments.

PLANNING AND ZONING COMMISSION RECOMMENDATION:

The Planning and Zoning Commission recommends that the City Council **approve** the Planned Area Development Amendment for Rancho Gabriela, (PADA05-037), subject to the stipulations listed under "Recommendations."

STAFF RECOMMENDATION:

Staff recommends that the City Council **approve** the Planned Area Development Amendment for Rancho Gabriela, (PADA05-037), subject to the stipulations listed under "Recommendations."

EXISTING AND SURROUNDING ZONING:

1.	ON-SITE:	Industrial (Rancho Gabriela P.A.D.)
	NORTH:	Industrial (Rancho Gabriela P.A.D.)
	EAST:	R1-43/C-2
	SOUTH:	R-43 (Maricopa County)
	WEST:	Industrial (Rancho Gabriela P.A.D.)

EXISTING AND SURROUNDING LAND USE:

2.	ON-SITE:	Vacant Land
	NORTH:	Vacant Land
	EAST:	Vacant Land
	SOUTH:	Vacant Land
	WEST	Single- Family Housing/Vacant Land

ADJACENT ROAD STATUS:

3. Current and Projected Road Status Tables:

Current:

Street Name	Right-of-Way	Pavement Width	Landscaping	# of Lanes in each direction	Sidewalks
Bullard Avenue	65 feet	24 feet	East side	1 lane	East side
Peoria Avenue	33 feet	24 feet	None	1 lane	None

Ultimate Build-Out:

Street Name	Right-of-Way	Pavement Width	Landscaping	# of Lanes in each direction	Sidewalks
Bullard Avenue	110 feet	64 feet	Sides, Median	2 lanes	6' required
Peoria Avenue	130 feet	78 feet	Sides, Median	3 lanes	6' required

EXISTING UTILITIES AND SERVICES STATUS:

4. **WATER** — Arizona-American Water Company

5. **SEWER** — City of Surprise

6. **FIRE PROTECTION** — The Surprise Fire Department currently has a fire station located at 15616 North Hollyhock Street. A second fire station is in operation at 18600 Reems Road, near the intersection of Reems and Mountain View Boulevard.

7. **POLICE PROTECTION** — The Surprise Police Department currently has a station located at 12425 W. Bell Road and a substation located at 18600 Reems Road.

PLAN ANALYSIS:

BACKGROUND

8. The Rancho Gabriela Development PAD was originally approved in July of 2000 (PAD98-107). The PAD development plan encompasses 798 acres of property. Land use within the northern portion of the project includes 635 acres dedicated to residential and commercial land use, and contains a 16-acre school site. The southeasterly 164 acres of the project are located within the 65ldn and are designated as employment.

The underlying general plan land use designation on the 20.21 acres located at the northwest corner of Bullard Avenue and Peoria Avenue is "Employment". The current PAD zoning on the subject property is "Industrial".

PROPOSAL

9. Commercial retail development is an allowable land use in an "Employment" general plan designation. However, a site for commercial retail development cannot exceed 25 acres in an employment designation. With this PAD application, the applicant seeks to establish 20.21 acres of Commercial zoning. Under the PAD amendment request, the subject property could be developed with C-2 (community commercial) or C-3 (general commercial) uses. However, though the PAD amendment, the applicant has also requested that the existing "Industrial" uses be allowed to remain as permitted uses upon the 20.21 acre parcel to provide market flexibility for the parcel. Staff has no objection to the subject request.

NOISE:

10. This property is located within the 65 ldn high noise contour line area. Luke Air Force Base has provided a letter stating no objection to the zoning change from industrial to commercial.

COMMUNITY OUTREACH:

12. The applicant forwarded a letter on March 25th to surrounding property owners. The letter provided information regarding their request to change the designation from industrial to commercial uses. One property owner met with the applicant. No objection to the PAD Amendment request was raised at the meeting. Staff has not received any phone calls or inquiries from the public regarding the zoning change.

CONCLUSION:

13. The subject request will enhance and meet several goals of the General Plan 2020. Also, this proposed P.A.D. amendment will not adversely affect the health, safety, or welfare of the citizens of the City of Surprise.

PAD 98-107 61007

RANCHO GABRIELA
PLANNED AREA DEVELOPMENT

Development Standards

LOT SIZE	R1-5 PAD 48' X 115'	R1-5 PAD 53' X 115'	R1-5 PAD 58' X 115'	R1-5 PAD 63' X 115'	R1-18 PAD 100' X 150'
RESIDENTIAL					
Minimum Lot Area [1]	5,520 sf	6,095 sf	6,670 sf	7,245 sf	15,000 sf
Minimum Lot Width--Interior Lot [2]	48'	53'	58'	63'	100'
Minimum Lot Width--Corner Lot [2]	58'	63'	68'	73'	110'
Maximum Building Height	30'	30'	30'	30'	35'
Front Yard Setback	18', 21', 24'	18', 21', 24'	18', 21', 24'	18', 21', 24'	25'
Front Yard Setback--Stagger	3' Min.	3' Min.	3' Min.	3' Min.	n/a
Front Yard Setback--Front of House/Garage Recessed	12' Min.	12' Min.	12' Min.	12' Min.	25' Min.
Front Yard Setback--Side Entry Garages	12' Min.	12' Min.	12' Min.	12' Min.	25' Min.
Property Line to Vertical Garage Door	18' Min.	18' Min.	18' Min.	18' Min.	25' Min.
Driveway Length	20' Min.	20' Min.	20' Min.	20' Min.	25' Min.
One-Story					
Side Yard Setback--Interior Lot--Minimum	5'	5'	5'	5'	10'
Side Yard Setback--Interior Lot--Aggregate	13'	13'	13'	13'	20'
Side Yard Setback--Corner Lot--Minimum	5'	5'	5'	5'	10'
Side Yard Setback--Corner Lot--Street Side	18'	18'	18'	18'	20'
Side Yard Setback--Corner Lot--Aggregate	23'	23'	23'	23'	30'
Two-Story					
Side Yard Setback--Interior Lot--Minimum	7'	7'	7'	7'	10'
Side Yard Setback--Interior Lot--Aggregate	15'	15'	15'	15'	20'
Side Yard Setback--Corner Lot--Minimum	7'	7'	7'	7'	10'
Side Yard Setback--Corner Lot--Street Side	18'	18'	18'	18'	20'
Side Yard Setback--Corner Lot--Aggregate	25'	25'	25'	25'	30'
Rear Yard Setback[4]	15'	15'	15'	15'	25'
Minimum Distance Between Buildings--One-Story	10'	10'	10'	10'	20'
Minimum Distance Between Buildings--Two-Story	14'	14'	14'	14'	20'
Minimum Distance Between Buildings--One/Two-Story	12'	12'	12'	12'	20'
Maximum Lot Coverage--Primary Structure	50%	50%	50%	50%	50%
Maximum Lot Coverage--Primary Structure with Patios/Shade Structures	55%	55%	55%	55%	55%
Maximum House Width--One-Story	35'	40'	45'	50'	80'
Maximum House Width--Two-Story	33'	38'	43'	48'	80'
Landscape Tracts--Collector Street	10'	10'	10'	10'	10'
Landscape Tracts--Arterial Street	20'	20'	20'	20'	20'
Landscape Tracts--Adjacent to Lots Siding Collector	25'	25'	25'	25'	25'

NOTES:

1. Not more than 10% of the lots within a Lot Category may be smaller than the Minimum Lot Size for that Lot Category.
2. Minimum lot widths will be measured at the front setback line.
3. In certain cases, flag lots may be designed. Flag lots shall be addressed during the preliminary plat process.
4. For Local, Collector and Arterial Streets (same due to landscape tracts). Patio covers may encroach up to 10' from the rear property line.
5. Non-structural architectural features such as fireplaces, bay windows and pop-outs may encroach not more than 2' into sideyard setback.
6. Local to Collector and Local to Local shall have a minimum of 125' offset.

PAD 98-107 61007

RANCHO GABRIELA
PLANNED AREA DEVELOPMENT

Development Standards

LOT SIZE	R1-5 PAD 48' X 115'	R1-5 PAD 53' X 115'	R1-5 PAD 58' X 115'	R1-5 PAD 63' X 115'	R1-18 PAD 100' X 150'
RESIDENTIAL					
Minimum Lot Area [1]	5,520 sf	6,095 sf	6,670 sf	7,245 sf	15,000 sf
Minimum Lot Width--Interior Lot [2]	48'	53'	58'	63'	100'
Minimum Lot Width--Corner Lot [2]	58'	63'	68'	73'	110'
Maximum Building Height	30'	30'	30'	30'	35'
Front Yard Setback	18', 21', 24'	18', 21', 24'	18', 21', 24'	18', 21', 24'	25'
Front Yard Setback--Stagger	3' Min.	3' Min.	3' Min.	3' Min.	n/a
Front Yard Setback--Front of House/Garage Recessed	12' Min.	12' Min.	12' Min.	12' Min.	25' Min.
Front Yard Setback--Side Entry Garages	12' Min.	12' Min.	12' Min.	12' Min.	25' Min.
Property Line to Vertical Garage Door	18' Min.	18' Min.	18' Min.	18' Min.	25' Min.
Driveway Length	20' Min.	20' Min.	20' Min.	20' Min.	25' Min.
One-Story					
Side Yard Setback--Interior Lot--Minimum	5'	5'	5'	5'	10'
Side Yard Setback--Interior Lot--Aggregate	13'	13'	13'	13'	20'
Side Yard Setback--Corner Lot--Minimum	5'	5'	5'	5'	10'
Side Yard Setback--Corner Lot--Street Side	18'	18'	18'	18'	20'
Side Yard Setback--Corner Lot--Aggregate	23'	23'	23'	23'	30'
Two-Story					
Side Yard Setback--Interior Lot--Minimum	7'	7'	7'	7'	10'
Side Yard Setback--Interior Lot--Aggregate	15'	15'	15'	15'	20'
Side Yard Setback--Corner Lot--Minimum	7'	7'	7'	7'	10'
Side Yard Setback--Corner Lot--Street Side	18'	18'	18'	18'	20'
Side Yard Setback--Corner Lot--Aggregate	25'	25'	25'	25'	30'
Rear Yard Setback[4]	15'	15'	15'	15'	25'
Minimum Distance Between Buildings--One-Story	10'	10'	10'	10'	20'
Minimum Distance Between Buildings--Two-Story	14'	14'	14'	14'	20'
Minimum Distance Between Buildings--One/Two-Story	12'	12'	12'	12'	20'
Maximum Lot Coverage--Primary Structure	50%	50%	50%	50%	50%
Maximum Lot Coverage--Primary Structure with Patios/Shade Structures	55%	55%	55%	55%	55%
Maximum House Width--One-Story	35'	40'	45'	50'	80'
Maximum House Width--Two-Story	33'	38'	43'	48'	80'
Landscape Tracts--Collector Street	10'	10'	10'	10'	10'
Landscape Tracts--Arterial Street	20'	20'	20'	20'	20'
Landscape Tracts--Adjacent to Lots Siding Collector	25'	25'	25'	25'	25'

NOTES:

1. Not more than 10% of the lots within a Lot Category may be smaller than the Minimum Lot Size for that Lot Category.
2. Minimum lot widths will be measured at the front setback line.
3. In certain cases, flag lots may be designed. Flag lots shall be addressed during the preliminary plat process.
4. For Local, Collector and Arterial Streets (same due to landscape tracts). Patio covers may encroach up to 10' from the rear property line.
5. Non-structural architectural features such as fireplaces, bay windows and pop-outs may encroach not more than 2' into sideyard setback.
6. Local to Collector and Local to Local shall have a minimum of 125' offset.

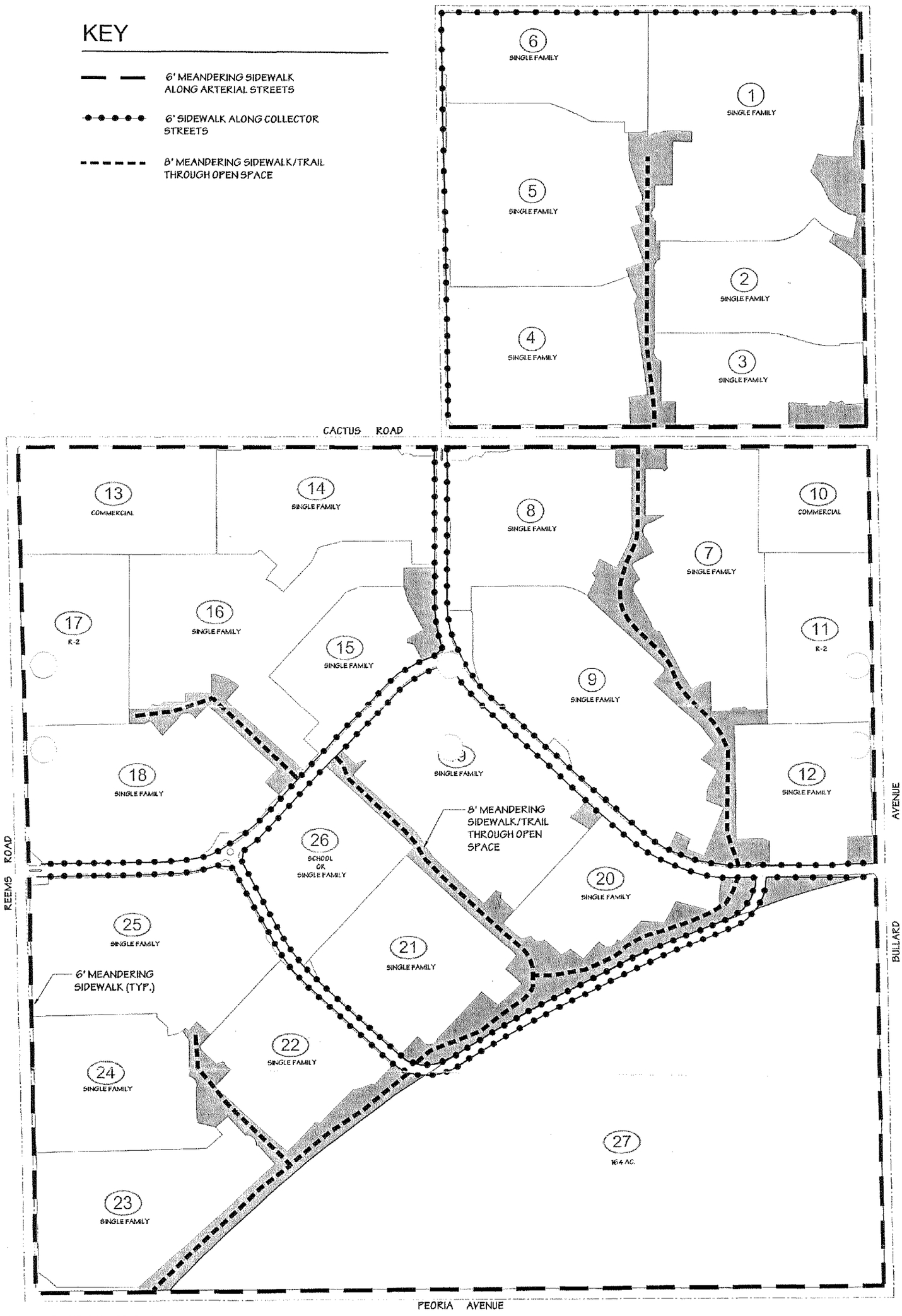

MASTER TRAIL PLAN

RANCHO GABRIELA

NORTH
1"=250'-0"
6.19.00
99029

0 250 500 750 1000

urban concepts
Planning & Urban Design
Landscape Architecture
P.O.Box 13348
Scottsdale, AZ 85267-3348
(480) 431-3284
Fax (480) 691-1522

f2 GROUP
Landscape Design - Irrigation Systems
Native Plant Analysis - Urban Design
P.O. Box 11127 Chandler, AZ 85248
Phone 480/726-9127 Fax 480/895-1999
E-mail f2group@aol.com

LAND PLAN PREPARED BY: URBAN CONCEPTS
PREPARED FOR: STARDUST DEVELOPMENT

CITY OF SURPRISE
PLANNING AND ZONING DEPARTMENT
APPROVED

Case No.: PADA06-322
(Hix Patio Cover)

P.C. Comm. Approval:

City Council Approval:

Admin by Adam Copeland
P.A.D.A. Approval: 7/19/2006

Stipulations:

- **ALUMALATTICE PATIO COVERS**
- **SUN SCREENS**
- **RAIN GUTTERS**

ARIZONA

SUN CONTROL PRODUCTS
www.arizonasuncontrolproducts.com
We Sell Lifestyles

Office (602) 415-9177
103 South 57th Drive • Phoenix, Arizona 85043
Licensed, Bonded and Insured (ROC 189930)
Alumalattice Patios ... Sunscreens ... Security Doors ...

Fax (602) 415-9172

FROM CACTUS (W. of BILLARD) (R) DESERT HILLS (L) 148TH DRIVE (R) RIVIERA

PROPOSAL SUBMITTED TO	PHONE	DATE
JERRY + SHIRLEY HIX	623-537-9715	7/19/06
STREET: 14393 W. RIVIERA DRIVE	JOB LOCATION: A A A	E-MAIL ADDRESS
CITY, STATE AND ZIP CODE: SURPRISE, AZ 85374	COLOR: White	INSTALL DATE
POST TYPE: STANDARD	x JH	CUSTOMER WILL BE CALLED ONLY: Locked Gate, Dogs

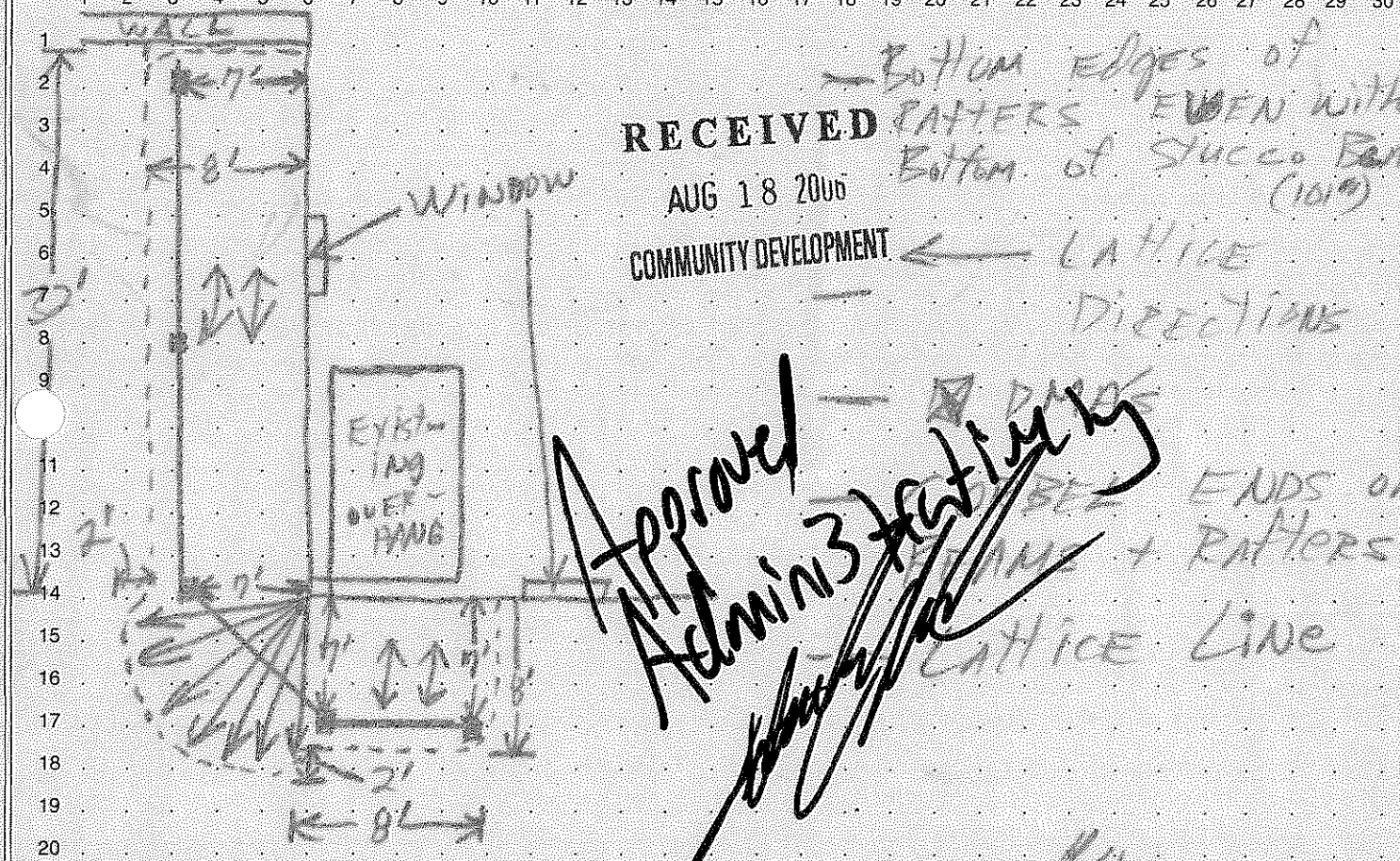

RECEIVED
AUG 18 2006
COMMUNITY DEVELOPMENT

Approved Admin3 Hatting

POST HEIGHT H' 93"	3X8 BEAM X	HOA YES	COST $4,600.00
POST TYPE STD.	2X6 RAFTERS X		TAX
DMA	RAFTER SPACING 24"		TOTAL $4,600.00
SLAB	LATTICE SIZE/SPACING 2"X2"		DEPOSIT $1,000.00 CK#
COLOR	PERMIT YES		BALANCE DUE $3,600.00

WE PROPOSE TO FURNISH MATERIAL AND LABOR — COMPLETE IN ACCORDANCE WITH ABOVE SPECIFICATIONS. ALL WORK GUARANTEED.

"BALANCE DUE UPON COMPLETION."

$1,000.00 DUE UPON Receipt of City + HOA PERMITS

Terms of Payment: Amount indicated below on balance due line when labor is done and materials are furnished, and is payable in country listed above as part of the address of seller. A finance charge of 2% per month (24% Per Annum) will be charged on **ANY BALANCE** over 30 days.

SIGNATURE [signature]

Balance due upon completion

TYPE OF PAYMENT _____ **CUSTOMER SIGNATURE** x Jerry Hix

Changes made at time of install will be charged on a time and material basis. Initial: x JH

Trend Homes of Arizona

PHONE: 480-821-8000
SCALE: 1"=20'

RANCHO GABRIELA
PARCEL 7

RECEIVED
AUG 18 2008
COMMUNITY DEVELOPMENT

BASED ON THE SUBMITTED INFORMATION, THESE PLANS ARE, TO THE BEST OF MY KNOWLEDGE, IN ACCORDANCE WITH THE CITY OF SURPRISE CODE. THIS APPROVAL IS NOT TO BE CONSTRUED AS AN APPROVAL OF ANY VIOLATION OF THE INTERNATIONAL BUILDING, PLUMBING, MECHANICAL AND THE NATIONAL ELECTRIC CODES.

BY _____ DATE 12/10/03
FINAL APPROVAL CONTINGENT ON FAVORABLE FIELD INSPECTION

LEGEND

- PROPERTY LINE
- (E) ELEC. METER
- (G) GAS METER
- FENCE
- A/C UNIT
- OPTION

LOT:	95
GARAGE:	LEFT
ADDRESS:	14893 N. RIVIERA DR.
PLAN:	116
ELEVATION:	C
FIN. FLOOR:	58.17
PAD:	57.5
CURB:	ROLLED
LOT SQ. FT.:	6,542
BLDG. AREA:	2140
% COVERAGE:	32
LIN. FT. FENCE	220
OPTIONS:	PATIO 'A'
	--
	--

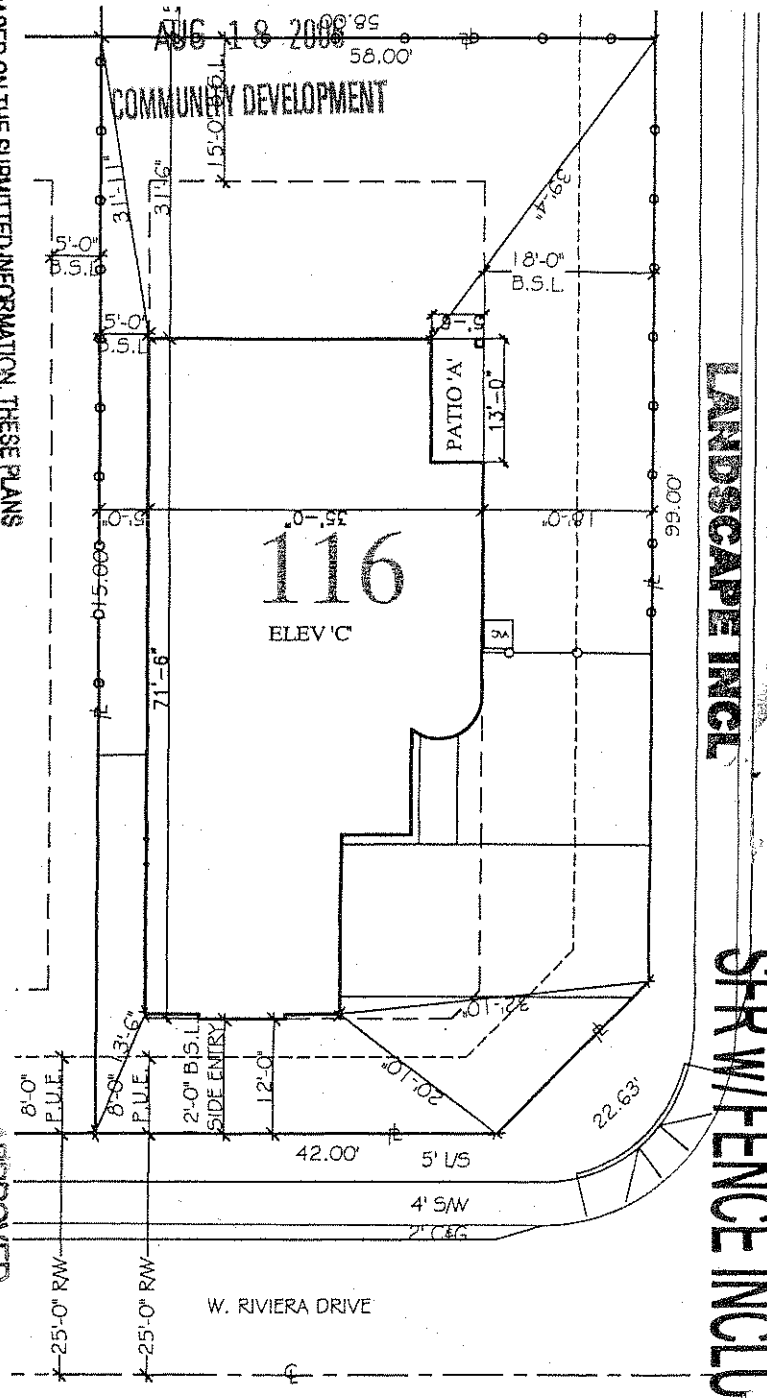

PLANNING AND ZONING DEPT.
APPROVED
DATE 12/10/03
APPV'D BY
CITY OF SURPRISE

DATE: _____ SALES REPRESENTATIVE

DATE: _____ HOME OWNER

DATE: _____ SUPERINTENDENT

NOTE:
THIS PLOT PLAN IS FOR THE USE OF TREND HOMES ONLY. ALL MEASUREMENTS, ORIENTATION, AND UTILITY LOCATIONS ARE APPROXIMATE AND SUBJECT TO FIELD CHANGE. SEE THE RECORDED PLAT FOR THE TRUE LOT SHAPE, DIMENSIONS AND POSSIBLE EASEMENTS. THIS IS NOT AN AS-BUILT PLAN. BUILDER RESERVES THE RIGHT TO PLACE HOUSE ANYWHERE IN THE BUILDING ENVELOPE.

LOT #9

UPDATE:12.04.03

RANCHO GABRIELA HOA
P.O. Box 25466
Tempe, AZ 85285-5466
(480) 820-3451 (800) 678-9936

Thursday, August 17, 2006

HIX, JERRY & SHIRLEY
14893 W. RIVIERA DR.
SURPRISE, AZ
85379

Property Address:

HIX, JERRY & SHIRLEY
14893 W. RIVIERA DR.
SURPRISE, AZ 85379

RECEIVED
AUG 18 2006
COMMUNITY DEVELOPMENT

Reference: RAG P7 95 8/7/06 AS 4 Approval

Description

Approved: Alumalattice patio cover addition.

Dear Member:

The Association would like to thank you for your recent submittal to the Architectural Committee. We are happy to inform you that your request has been approved. Please refer to the above paragraph for any comments regarding the Committee's decision.

Again, thank you for your cooperation in submitting and participating in the architectural submittal process

Peri Swenson
For the Board of Directors
RANCHO GABRIELA HOA

8-18-06

ATTN: ADAM COPELAND

Would like a pad variance in order to build a lattice patio cover on the side of my home @ 14893 W. Riviera Dr. in Surprise per our conversation on 7-21-06.

Thank you for your attention to this matter.

Shirley Hi

RECEIVED
AUG 18 2006
COMMUNITY DEVELOPMENT

SURPRISE
ARIZONA

SUBMITTAL ITEM WAIVER

RECEIVED
AUG 18 2006
COMMUNITY DEVELOPMENT

Tracking #: PADA 06-322

Project Name: Patio encroachment to side property line

Applicant-Print Name	Company	Signature	Date

Requested items to be waived:
All ITEMS WAIVED WHAT IS NEEDED BELOW: ↓
1) PLOT PLAN SHOWING PROPOSED PATIO EXTENSION TO SCALE show all setbacks
2) Narritive on project and why amendment is needed.
3) Page 4 of 5 filled out in process guide.
4) $500 Fee For Minor PAD Amendment

Upon approval, this document must accompany the submittal. If this waiver is not presented and the application has missing items, the submittal will not be accepted.

Department Use Only

Printed Name	Signature	Department	Date
Adam Copeland	[signature]	PLANNING	7/21/06

STAFF NOTES: