SURPRISE
ARIZONA

Water Design Standards
and Technology Assessments
City of Surprise Project No. COS08-053

Water and Wastewater Facility Guidelines

Carollo Project No. 8267A.00

FINAL REPORT

APRIL 2011

carollo
Engineers...Working Wonders With Water®

SURPRISE
ARIZONA

City of Surprise

Water and Wastewater Facility Guidelines

Public Works Department

April 2011

FINAL

The undersigned has approved this document for and on behalf of Carollo Engineers, P.C.

Vice President

Registered Professional Engineer (Civil)
CERTIFICATE NO.
12747
GARY E.
SIDERS
Date Signed 4/29/11
ARIZONA, U. S. A.
EXPIRES 06-30-2013

carollo

4600 East Washington, Suite 500 • Phoenix, Arizona 85034 • P. 602.263.9500 • F. 602.265.1422

City of Surprise
Water and Wastewater Facility Guidelines

TABLE OF CONTENTS

EXECUTIVE SUMMARY

VOLUME 1 OF 3 - GENERAL WATER AND WASTEWATER FACILITY GUIDELINES

CHAPTER 1 GENERAL
CHAPTER 2 CIVIL DESIGN
CHAPTER 3 GEOTECHNICAL DESIGN
CHAPTER 4 STRUCTURAL AND SEISMIC DESIGN
CHAPTER 5 CORROSION CONTROL
CHAPTER 6 CHEMICAL FACILITIES
CHAPTER 7 ELECTRICAL REQUIREMENTS
CHAPTER 8 INSTRUMENTATION AND CONTROL
CHAPTER 9 HEATING, VENTILATION, AND AIR CONDITIONING (HVAC) SYSTEMS

VOLUME 2 OF 3 - WATER FACILITY GUIDELINES

CHAPTER 10 ON-SITE WATER PIPING AND POTABLE WATER TRANSMISSION PIPELINES
CHAPTER 11 WATER PUMP STATIONS
CHAPTER 12 PRESSURE REDUCING STATIONS
CHAPTER 13 WATER STORAGE RESERVOIRS
CHAPTER 14 WATER PRODUCTION WELLS
CHAPTER 15 NOT USED

VOLUME 3 OF 3 - WASTEWATER FACILITY GUIDELINES

CHAPTER 16 LARGE DIAMETER WASTEWATER INTERCEPTORS
CHAPTER 17 WASTEWATER LIFT STATIONS
CHAPTER 18 RECLAIMED WATER PIPELINES
CHAPTER 19 RECLAIMED WATER STORAGE RESERVOIRS
CHAPTER 20 RECLAIMED WATER PUMP STATIONS
CHAPTER 21 RECHARGE AND RECOVERY FACILITIES

EXPIRES 06-30-2013

WATER AND WASTEWATER FACILTY GUIDELINES EXECUTIVE SUMMARY

The City of Surprise (City) has experienced significant development over the past decade and as a result, the water and wastewater facilities designed and constructed by developers vary in terms of design, construction, and quality due in part to the City's lack of minimum guidelines. The City's engineering development standards (EDS) and Maricopa Association of Governments (MAG) guidelines do not adequately address all of the City's water and wastewater facilities and are silent on many of the water and wastewater facilities. The lack of minimum standards has also not allowed the City to take a defensible position for design of future water and wastewater facilities.

As a result, the City faces maintaining water and wastewater facilities that are not uniform as well as future facilities that will continue to lack consistency in terms of quality and uniformity. To address these issues, the City retained Carollo Engineers and worked in conjunction with developer's representatives to prepare design standards and guidelines that define minimum requirements for both water and wastewater facilities that are not adequately addressed by the EDS or MAG. The requirements are based on the City's experience and provide a defensible position for future water and wastewater facilities that will be provided by developers. The Water and Wastewater Facility Guidelines are separated into three separate volumes as follows:

Volume 1 of 3, General Water and Wastewater Facility Guidelines – Provides general standards and requirements that apply to both water and wastewater facilities. Volume 1 begins with a chapter on general submittal requirements for design projects, project processing, and also provides an overview of applicable codes as well as agency coordination. Additional chapters are also provided on civil design, geotechnical design, structural design, corrosion control, chemical facilities, electrical requirements, instrumentation and control, and HVAC.

Volume 2 of 3, Water Facility Guidelines – Provides requirements specific to potable water facilities organized into chapters that include water pipelines, water pump stations, pressure-reducing stations, water storage reservoirs, and water production wells.

Volume 3 of 3, Wastewater Facility Guidelines – Provides requirements specific to wastewater facilities organized into chapters that include large diameter wastewater interceptors, wastewater lift stations, reclaimed water pipelines, reclaimed water storage reservoirs, reclaimed water pump stations, and recharge and recovery facilities.

City of Surprise

General Water and Wastewater Facility Guidelines Volume 1 of 3

Public Works Department

April 2011

FINAL

4600 East Washington, Suite 500 • Phoenix, Arizona 85034 • P. 602.263.9500 • F. 602.265.1422

City of Surprise

General Water and Wastewater Facility Guidelines

Volume 1 of 3

TABLE OF CONTENTS

Page No.

CHAPTER 1 GENERAL

1.01 Introduction 1-1
1.02 Proposed Deviations 1-2
1.03 Applicable Policies, Codes, and Standards 1-2
1.04 Abbreviations 1-3
1.05 Permits 1-8
1.06 Community Development, Entitlements, and Platting 1-10
1.07 Environmental and Historic Investigation 1-10
1.08 Local Agency and Utility Coordination 1-11
1.09 Project Processing 1-12
1.10 Master Planning Facilities 1-13
1.11 Concept Design Review (CDR) Phase 1-14
1.12 Design Phase 1-15
1.13 Bid Phase 1-18
1.14 Construction Phase 1-18
1.15 Project Closeout Phase 1-23
1.16 Operation and Maintenance Manuals 1-25
1.17 Start-up, Functional Testing and Operational Testing 1-28
1.18 Commissioning 1-31
1.19 Letters of Compliance 1-32
1.20 As-Built Drawings 1-33

CHAPTER 2 CIVIL DESIGN

2.01 General 2-1
2.02 Site Survey, Horizontal and Vertical Control 2-1
2.03 Setbacks 2-3
2.04 Vehicle Access 2-3
2.05 Traffic Study 2-3
2.06 Drainage Report 2-4
2.07 Stormwater Management 2-4
2.08 Grading 2-5
2.09 Paving 2-5
2.10 Yard Structures 2-6
2.11 Architectural 2-7
2.12 Landscaping 2-7

CHAPTER 3 GEOTECHNICAL DESIGN
3.01 Geotechnical Investigation 3-1
3.02 Geotechnical Report 3-1

CHAPTER 4 STRUCTURAL AND SEISMIC DESIGN
4.01 General 4-1
4.02 Site Criteria 4-2
4.03 Seismic Design Criteria 4-3
4.04 Structural Loads 4-4
4.05 Structural Design Requirements 4-5

CHAPTER 5 CORROSION CONTROL
5.01 Corrosion Analysis and Evaluation 5-1
5.02 Corrosion Analysis Results, Conclusions and Recommendations 5-1
5.03 Induced Voltage and Stray Current Mitigation 5-3
5.04 Materials Selection 5-3
5.05 Protective Linings and Coatings 5-5
5.06 Buried Piping 5-8
5.07 Cathodic Protection 5-9

CHAPTER 6 CHEMICAL FACILITIES
6.01 General 6-1
6.02 Regulatory Considerations 6-2
6.03 Concept Design Review (CDR) Phase 6-3
6.04 Final Design Phase 6-6
6.05 Site Considerations 6-6
6.06 Safety 6-7
6.07 Chemical Compatibility 6-8
6.08 Chemical Transfer 6-9
6.09 Chemical Storage Totes 6-10
6.10 Chemical Storage Tanks 6-11
6.11 Metering Pumps 6-14
6.12 Piping Design 6-17
6.13 Valves 6-19
6.14 Heating, Ventilation, and Air Conditioning (HVAC) 6-20
6.15 Instrumentation 6-21

CHAPTER 7 ELECTRICAL REQUIREMENTS
7.01 General 7-1
7.02 Electrical Room Architectural Requirements 7-3
7.03 Electrical Room HVAC Requirements 7-3
7.04 Electrical Power System Study 7-4
7.05 Electrical Equipment, Conduit, and Conductor Sizing and Rating 7-5
7.06 Grounding and Bonding 7-5
7.07 Electrical Identification 7-6
7.08 Wires and Cables 7-7
7.09 Electrical Conduit 7-8
7.10 Standby Power 7-9
7.11 Non-Utility, Pad-Mounted Transformers 7-10
7.12 Switchgears (Medium Voltage) 7-11
7.13 Switchgears (480V), Switchboards, and Distribution Panels 7-12

7.14 Variable Frequency Drives (VFDs) 7-12
7.15 Soft Starters 7-14
7.16 Motor Control Centers....7-14
7.17 Lightning Protection 7-16
7.18 Electrical Ductbanks 7-17
7.19 Lighting 7-17
7.20 Security 7-18
7.21 Electrical Drawings 7-18
7.22 Electrical Specifications 7-19

CHAPTER 8 INSTRUMENTATION AND CONTROL
8.01 General 8-1
8.02 Analog Analyzers 8-3
8.03 Flow Measurement 8-6
8.04 Level Measurement 8-8
8.05 Pressure Measurement....8-10
8.06 Temperature Measurement 8-12
8.07 Uninterruptible Power Supply (UPS)....8-13
8.08 Programmable Logic Controllers (PLCs) 8-14
8.09 Supervisory Control and Data Acquisition (SCADA)....8-16
8.10 Process Control 8-19
8.11 Controls and Instrumentation Start-Up....8-23
8.12 Calibration of Panel Mounted Instruments 8-26
8.13 Instrumentation Specifications 8-26

CHAPTER 9 HEATING, VENTILATION, AND AIR CONDITIONING (HVAC) SYSTEMS
9.01 General 9-1
9.02 Concept Design Review (CDR) Phase 9-2
9.03 Final Design Phase....9-2
9.04 Energy Code Analysis....9-2
9.05 Motors 9-3
9.06 Air Conditioning Systems:....9-3
9.07 Evaporative Cooling Systems 9-4
9.08 Maintenance 9-7
9.09 Heating Systems....9-7
9.10 Ductwork 9-8
9.11 Louvers and Dampeners....9-10
9.12 HVAC Systems Testing and Balancing....9-10
9.13 Support Systems....9-12
9.14 Fire Protection....9-13
9.15 Electrical Systems....9-13
9.16 Instrumentation and Control....9-13

LIST OF TABLES

Table 8.1 Instrumentation and Control Standards 8-1
Table 9.1 Louver Sound Attenuation 9-6

LIST OF FIGURES

Figure 2.1 Perimeter Wall 2-8
Figure 2.2 Sliding Access Gate 2-9
Figure 6.1 Emergency Shower & Eyewash 6-22
Figure 6.2 Chemical Unloading Station Panels 6-23
Figure 6.3 Chemical Storage Tanks 6-24
Figure 6.4 Chemical Metering Pump 6-25
Figure 7.1 Utility Power Service Entrance Access 7-21

CHAPTER 1 GENERAL

1.01 Introduction

A. The Water and Wastewater Standards and Guidelines are intended to provide useful information as well as delineate minimum standards for the City of Surprise (COS). The Standards and Guidelines are to be used by engineers, developers, and contractors in the planning, design, and construction of water and wastewater treatment and infrastructure facilities.

B. The objectives of the Standards and Guidelines are to:

1. Protect public and environmental health.
2. Provide cost effective and sustainable solutions for water and wastewater facilities.
3. Maximize useful life of COS facilities.
4. Facilitate uniformity of equipment and facilities.
5. Optimize operation and maintenance.

C. Scope: The Standards and Guidelines apply to new facilities, expansion of existing facilities, as well as modifications or rehabilitation of existing facilities. For facilities in the Right-of-Way, the COS Engineering Design Standards (EDS) govern.

D. Organization: The Standards and Guidelines are organized into separate volumes as follows:

1. Volume 1 of 3 - General Standards and Guidelines, provides general standards and guidelines that apply to Volumes II and III.
2. Volume 2 of 3 - Water Standards and Guidelines, provides standards and guidelines for water treatment, storage, and distribution facilities.
3. Volume 3 of 3 - Wastewater Standards and Guidelines, provides standards and guidelines for wastewater collection, treatment, and reclaimed water facilities.

E. Definitions: The following definitions will be used throughout the Standards and Guidelines and shall be included in the Contract Documents.

1. Contractor: The individual or entity with whom the Owner has entered into an agreement to complete construction for the project.

2. Engineer: The individual or entity hired by the COS to prepare the Contract Documents that describe the project.

3. Owner: The City of Surprise (COS).

1.02 Proposed Deviations

A. The Standards and Guidelines are based on existing facilities or reflect what the COS deems to be economical based on capital costs, maintenance, treatment objectives, as well as life cycle costs. As such, validating a proposed deviation is the responsibility of the engineer, consultant, developer, or contractor.

B. Proposed deviations from the Standards and Guidelines provided herein must be submitted in writing to the Public Works Director with the following:

1. Summary of issues that prevent or present practical difficulties that warrant consideration of deviation(s) from the Standards and Guidelines

2. A life-cycle analysis comparing the Standards and Guidelines requirement(s) with the proposed deviation(s)

3. A comparison with the Standards and Guidelines with the proposed deviation with summary table of all known advantages and disadvantages

4. A list of at least 5 facilities located in the southwestern United States with facility address and contact information, where the proposed deviation has been successfully implemented for a period of not less than 5 years.

C. Ultimately, the acceptance of any deviations from the Standards and Guidelines shall be at the discretion of the COS.

D. Review fees for proposed deviations will be reimbursed to the COS based on the current rate schedule.

E. Approval of any proposed deviations will be a waiver provided in writing by the COS.

1.03 Applicable Policies, Codes, and Standards

A. These guidelines reflect the COS requirements and reference other agency requirements and documents, which include but are not limited to the following:

1. Arizona Administrative Code (AAC)

2. Arizona Department of Environmental Quality (ADEQ)
3. Arizona Department of Water Resources (ADWR)
4. Arizona Revised Statutes (ARS)
5. City of Surprise Engineering Development Standards (EDS)
6. City of Surprise Planning and Design Guidelines Manual
7. City of Surprise Unified Development Code (SUDC) – City of Surprise Municipal Code Chapter 122
8. Flood Control District of Maricopa County (FCDMC) Drainage Design Manuals
9. Maricopa Association of Governments (MAG) Specifications and Details
10. Maricopa County Environmental Services Department (MCESD)
11. Maricopa County Air Quality Department (MCAQD)
12. U.S. Environmental Protection Agency (EPA).

B. When the standards and guidelines indicated herein are in conflict with a referenced document, the more stringent requirement will govern.

1.04 Abbreviations

A. National Standards and Codes:

AABC	Associated Air Balancing Council
AASHTO	American Association of State Highway and Transportation Officials
ACI	American Concrete Institute
ADA	Americans with Disabilities Act
ADC	Air Diffusion Council
ABMA	American Bearing Manufacturers Association
AGMA	American Gear Manufacturers Association
AMCA	Air Movement and Conditioning Association
ANSI	American National Standards Institute
APWA	American Public Works Association
ARI	American Refrigeration Institute
ASCE	American Society of Civil Engineers

ASHRAE	American Society of Heating, Refrigeration, and Air Conditioning Engineers
ASME	American Society of Mechanical Engineers
ASPE	American Society of Professional Engineers
ASTM	American Society of Testing and Materials
AWS	American Welding Society
AWWA	American Water Works Association
CFR	Code of Federal Regulations
CSI	Construction Specifications Institute
DIPRA	Ductile Iron Pipe Research Association
EPA	Environmental Protection Agency
FEMA	Federal Emergency Management Agency
HI	Hydraulic Institute Standards
IBC	International Building Code
IMC	International Mechanical Code
IPC	International Plumbing Code
IEEE	Institute of Electrical and Electronics Engineers
IFC	International Fire Code
ISA	Instrumentation Standards and Automation Society
MSS	Manufacturer's Standardization Society
MUTCD	Manual on Uniform Traffic Control Devices
NACE	National Association of Corrosion Engineers
NEBB	National Environmental Balancing Bureau
NEC	National Electric Code
NEMA	National Electric Manufacturers Association
NFPA	National Fire Protection Agency
NPT	National Pipe Thread
NSF	National Sanitation Federation
OSHA	Operational Safety and Health Administration
SMACNA	Sheet Metal and Air Conditioning Contractors National Association
UL	Underwriters Laboratory
USACE	United States Army Corps of Engineers
USDOT	United States Department of Transportation

USF&W	United States Fish & Wildlife
USGS	United States Geological Survey

B. State and Local Agencies, Standards and Codes:

AAC	Arizona Administrative Code
AAWC	Arizona American Water Company
ADEQ	Arizona Department of Environmental Quality
ADWR	Arizona Department of Water Resources
ADOT	Arizona Department of Transportation
AERC	Arizona Emergency Response Commission
APSC	Arizona Public Service Company
ARS	Arizona Revised Statutes
BNSF	Burlington Northern Santa Fe
CDD	Community Development Department
COS	City of Surprise
DSC	Development Services Center
EDS	(City of Surprise) Engineering Development Standards
FCDMC	Flood Control District of Maricopa County
MAGS	Maricopa Association of Governments Specifications
MCAQD	Maricopa County Air Quality Department
MCESD	Maricopa County Environmental Services Department
MCDOT	Maricopa County Department of Transportation
SUDC	Surprise Uniform Development Code, City Municipal Code
SRP	Salt River Project

C. Abbreviations:

AC	Asphaltic Concrete
AOC	Approval of Construction
APN	Assessors Parcel Number
APP	Approval of Proposed Plan or
ATC	Approval to Construct
ATCO	Approval to Commence Operations
BADCT	Best Available Demonstrated Control Technology
BAT	Best Available Technology

BEP	Best Efficiency Point
C/L	Centerline
CDR	Concept Design Review
CFCs	Chlorofluorocarbons
CIP	Cast Iron Pipe or Capital Improvement Program
CLSM	Controlled Low Strength Material
CMAR	Construction Management at Risk
CPVC	Chlorinated Polyvinyl Chloride
CSI	Control Systems Integrator
DB	Design Build
DC	Direct Current
DIP	Ductile Iron Pipe
FPS	Feet Per Second
GPM	Gallons Per Minute
GMP	Guaranteed Maximum Price
HART	Highway Addressable Remote Transducer
HDPE	High Density Polyethylene
HGL	Hydraulic Grade Line
HVAC	Heating, Ventilation, and Air Conditioning
I&C	Instrumentation and Control
I/O	Input/Output
ID	Inside Diameter
IAOC	Interim Approval of Construction
LED	Light Emitting Diode
LF	Linear Feet
MCC	Motor Control Center
MDD	Maximum Day Demand
MGD	Million Gallons Per Day
MLCSP	Mortar Lined and Coated Steel Pipe
MOPO	Maintenance of Plant Operations
MSDS	Material Safety Data Sheet
NAVD	North American Vertical Datum
NOI	Notice of Intent
NPSH	Net Positive Suction Head

NPSHR	Net Positive Suction Head Required
O&M	Operation and Maintenance
OD	Outside Diameter
P&ID	Process and Instrumentation Diagram
PCF	Pounds per Cubic Foot
PHD	Peak Hour Demand
PLC	Programmable Logic Controller
PPM	Parts Per Million
PRV	Pressure Reducing Valve
PSI	Pounds Per Square Inch
PVC	Polyvinyl Chloride
QC	Quality Control
RCP	Reinforced Concrete Pipe
RCRA	Resource Conservation and Recovery Act
ROW	Right-of-Way
RPPA	Reducing Pressure Principle Assembly
RTU	Remote Telemetry Unit
SCADA	Supervisory Control And Data Acquisition
SCFM	Standard Cubic Feet Per Minute
SEER	Seasonal Energy Efficiency Rating
SOP	Standard Operation Procedure
SPCC	Spill, Prevention, Control and Countermeasure
SSPC	Structural Steel Protective Coating
SST	Stainless Steel
TDH	Total Dynamic Head
TDS	Total Dissolved Solids
TVSS	Transient Voltage Surge Suppressor
UPS	Uninterruptible Power Supply
USA	Underground Service Alert
USF	Underground Storage Facility
VFD	Variable Frequency Drive

1.05 Permits

A. The Engineer is responsible for the following:

1. Meeting requirements of federal agencies

2. Meeting requirements of state and local agencies

3. Satisfying requirements of COS departments

4. Delineating the permits and approvals to be obtained by Engineer during design as well as the permits to be obtained by the Contractor during construction, which includes but is not limited to the following:

<u>Federal Permits and Approvals</u>

a) Environmental Assessment and/or Environmental Impact Statement, approval letters and other NEPA documents for U.S. Bureau of Reclamation
b) Environmental Assessment and/or Environmental Impact Statement, approval letters and other NEPA documents for U.S. Bureau of Land Management
c) Endangered Species Act Evaluation
d) National Preservation Act and Cultural Resources Evaluation
e) Clean Water Act 404 Permit for U.S. Army Corps of Engineers
f) Spill Prevention, Control and Countermeasures Plan for USEPA
g) Title V Air Quality Permit for USEPA
h) Risk Management Plan and Process Safety Plan for USEPA/OSHA
i) RCRA Hazardous Waste Compliance for USEPA

<u>State Permits and Approvals</u>

j) Arizona Pollutant Discharge Elimination System for ADEQ
k) APP for ADEQ
l) Deminimis General Permit for ADEQ
m) Stormwater Discharge Permit for ADEQ
n) Reclaimed Water Permits for ADEQ
o) Solid Waste Management Permit for ADEQ
p) Recovery Well Permit for ADWR
q) Well Drilling Permit for ADWR
r) Dry Well Registration Permit for ADWR
s) Water Storage and Underground Storage Facility Permits for ADWR
t) Right-of-way and traffic permits for AZDOT

<u>Local Permits and Approvals</u>

u) COS Building Permit
v) Flood Control Review by FCDMC
w) Traffic Review by MCDOT
x) NOI for dust control per MCAQD (by Contractor).
y) Air Quality Permit per MCAQD
z) Earth Moving Permit by MCAQD/MCESD
aa) New Source Approval by MCESD
bb) ATC for MCESD
cc) AOC for MCESD

5. Coordinating with the COS for acquiring federal, state, and local permits

6. Identifying submittal requirements and fees for permits

7. Obtaining agency approval and permits

8. Providing an O&M plan that meets all ADEQ and MCESD requirements

9. Identifying closure requirements and associated costs.

B. Security Features: The Engineer will be responsible to coordinate with the COS to comply with the following:

1. Compliance with the Department of Homeland Security Bio-Terrorism Act of 2002

2. Compliance with the current COS Security Master Plan

3. All security features for new facilities or expansion of existing facilities.

C. Permit Schedule: The Engineer will be responsible to provide a permit compliance schedule for all permits needed for the project throughout design and construction that includes the following:

1. Type of permit and associated agency

2. Permit fees

3. Milestones for submittals required for each agency

4. List of submittal requirements and forms for each agency

5. Compliance schedule.

1.06 Community Development, Entitlements, and Platting

A. The Engineer is responsible to comply with Community Development Department requirements for the development review process.

B. The Engineer shall contact the Community Development Department at the beginning of the project to determine Community Development requirements, which include zoning, entitlements, permits, and municipal code requirements.

C. Entitlements: The Engineer is responsible to obtain all entitlements for a project.

D. Schedule Impact: The Engineer shall develop a written project schedule, which provides sufficient time for approval of all entitlements.

1.07 Environmental and Historic Investigation

A. General: The Engineer is responsible for environmental and historical investigations for proposed facilities, which include field investigations, analyses, data collection, and reports.

B. The Engineer shall coordinate with all federal, state, and local agencies for environmental and historical investigations, which may include but are not limited to the following:

1. Environmental site assessment, to conform to current City requirements
   a) Phase 1
   b) Phase 2, according to current state and federal requirements and to allow the site to be used for its intended use.
   c) Remediation, if necessary

2. Environmental impact statement.

C. The Engineer shall prepare a summary Environmental and Historical Investigation Report that describes all applicable environmental and historical preservation requirements that apply to the project to be submitted with the CDR.

D. Agencies that may apply include but are not limited to the following:

1. ADWR

2. ADEQ

3. Arizona Department of Agriculture

4. Arizona Game and Fish Department
5. Arizona State Historic Preservation Office
6. USEPA
7. MCAQD
8. MCESD
9. RCRA
10. U.S. Army Corps of Engineers
11. U.S. Bureau of Land Management
12. U.S. Bureau of Reclamation
13. U.S. Fish & Wildlife.

1.08 Local Agency and Utility Coordination

A. The Engineer shall initiate contact and coordinate design efforts with all utilities and local agencies, which include communication during design and submitting progress submittals for conflict review.

B. Utilities include but are not limited to:

1. Arizona American Water
2. Qwest
3. Cox Communications
4. Southwest Gas
5. Arizona Public Service Co
6. Maricopa Water District
7. Other water provider(s) not listed.

C. Local agencies include but are not limited to:

1. ADEQ
2. ADOT
3. BNSF

4. City of Surprise
5. FCDMC
6. MAG
7. MCESD
8. MCDOT
9. Neighboring Municipalities
10. SRP.

D. The Engineer shall coordinate with the appropriate utility power company during design per Chapter 7 requirements. Provide utility power company design with 90 percent and 100 percent submittals.

1.09 Project Processing

A. Design-Bid-Build Project Processing: entails the submittal, review, and approval of project reports, memorandums, drawings, and specifications. This section provides a brief summary of the review and acceptance process. The design-bid-build process entails the following phases:

1. Concept Design Review phase, which includes preliminary studies, and 30 percent drawings.
2. Design Phase, which includes bid documents, technical specifications, and drawings as well as final agency acceptance and permitting activities.
3. Bid Phase during which the COS advertises bidding of the project, distributes bid documents to prospective contractors and addresses bid questions.
4. Construction Phase, which includes all construction activities, start-up, functional testing, and validation.
5. Project Closeout Phase, which includes final punchlist resolution and as-built drawings.

B. Alternate Project Delivery: The use of Design-Build (DB) and Construction-Management at Risk (CMAR) for a project must be in accordance with Title 34 of the ARS and shall be approved as a means of project delivery before or during the Concept Design Review phase by the COS. Each DB and CMAR project is unique with specific project goals. The COS reserves the right to

establish specific project processing submittals and procedures for each project. In general, the DB and CMAR process entails the following phases:

1. Concept Design Review (CDR) Phase, which entails studies and CDR as well as overall project schedule and identification of project team and specific roles, critical path as well as guaranteed maximum price (GMP).

2. Procurement Phase, which entails procuring equipment, piping, or other long-lead items directly from manufacturers to be assigned to the Contractor.

3. Preliminary Construction Phase, which may require some activities such as excavation and earthwork to occur in parallel with CDR phase and Procurement Phase.

4. Design Phase, which includes bid documents, technical specifications, and drawings.

5. Major Construction Phase, which includes all construction activities, start-up, functional testing, and validation.

6. Project Closeout Phase, which includes final punchlist resolution and as-built drawings.

C. Project Processing Submittals: The nature and quantity of draft reports, draft memorandums, and progress submittals will be determined by the COS on a project specific basis.

1.10 Master Planning Facilities

A. General: The Engineer is required to master plan facilities for a long-term planning period of the facility of not less than 30-years and identify phases of expansion and expansion triggers.

B. Expansion triggers: Identify one or more of the following triggers

1. Population growth.

2. Organic load increase.

3. Hydraulic flow increase.

4. Changes in permit or regulatory requirements.

C. Site Master Plan: Provide a site master plan in accordance with the following:

1. Design facilities in modules and master plan all facilities based on planning periods of 5 to 10 years as determined by the COS as follows.

2. Identify facilities to meet current conditions as defined by one or more of the expansion triggers listed.

3. Identify facilities to meet future conditions in incremental phases of expansion for periods of between 5 and 10 years as determined by a long-term planning period for the facility on life of facility and expansion triggers.

1.11 Concept Design Review (CDR) Phase

A. General: The CDR Phase entails an approved CDR that includes associated studies, investigations, and preliminary drawings to sufficiently define a project for review and approval by the COS in order to proceed with the Design Phase of a project.

B. An approved Concept Design Review (CDR) is required if indicated in the respective facility chapter prior to starting the Design Phase for a project.

C. CDR Content: The CDR establishes preliminary design criteria and delineates the studies and activities that will be required to complete a CDR and subsequent detailed design activities for a project. The CDR shall include the following at a minimum:

1. Description of project.

2. Proposed site for the project.

3. Summary of studies required for project, which specifically addresses geotechnical, traffic, and drainage studies.

4. Overview of project alternatives.

D. An approved Concept Design Review (CDR) is required with studies if indicated in the respective facility chapter as well as the major items that should be included prior to starting the Design Phase for a project.

E. CDR Content: The CDR establishes design criteria, current conditions, future expansion, and summarizes all activities that will be performed as required to complete the detailed design. The CDR shall include the following at a minimum:

1. Property information.

2. Permitting section, which includes the following:
   a) Matrix of all permits to be obtained and associated agency
   b) Submittal requirements and fees for each permit
   c) Timeline for each agency submittal that includes review periods

3. Community Development requirements and zoning.

4. Description of project.

5. Geotechnical Report (Chapter 3).

6. Environmental and Historic Investigation, which describes:
   a) Pre-application meetings with ADEQ, ADWR, MCESD, FCDMC
   b) Phase 1 environment assessment requirements, if applicable

7. Traffic Study (Chapter 2).

8. Drainage Study (Chapter 2).

9. Evaluation of alternatives.

10. 30 percent design drawings per Section 1.11.

11. Project design and construction schedule.

F. Concept Design Review (CDR) Submittal: Where required in facility chapters, a CDR will be submitted as follows, unless otherwise indicated in specific facility chapters:

1. Submit three (3) bound copies of the CDR.

2. Submit two electronic copies of the CDR, with electronic versions of the drainage and traffic studies as PDF files on CD.

G. Proceed with the Design Phase only upon receiving an acceptance of the CDR from the COS Public Works Director or the Public Works Director designee.

1.12 Design Phase

A. General: The Design Phase entails producing detailed design drawings with bid documents and technical specifications needed to bid and award the project to a Contractor for construction.

B. Alternate Project Delivery: For DB and CMAR, the progress submittal requirements and review periods may be modified as needed to meet project objectives.

C. Drawing Requirements: The Engineer shall provide design drawings that include the following at a minimum:

1. Cover sheet that includes project title, date, city council members.

2. Drawing index with drawing titles and drawing number.

3. Organized and numbered by discipline, which include the following:
   a) General
   b) Civil
   c) Architectural
   d) Structural
   e) Mechanical
   f) Electrical
   g) Instrumentation and Control

4. Incorporate COS equipment naming convention for equipment and instrumentation, which will be provided by the COS.

5. Prepared with AutoCAD, version as determined by COS.

D. Specification Requirements: The Engineer shall provide specifications that meet the following requirements:

1. Organized into divisions 0 through 16 per CSI 1995 master format.

2. Instrumentation and control specifications provided in Division 17.

3. Prepared with Microsoft Word, version determined by COS.

4. Includes equipment schedule that includes tag number, equipment location, drawing reference(s), design criteria, motor HP, and power supply.

5. Includes instrumentation schedule that includes tag number, instrument location, drawing reference(s), calibration range, units of measurement, operating conditions, summary of analog and discrete inputs and outputs.

E. Progress submittals are required to allow the COS to review documents. The Engineer shall allow for a minimum 4-week review period to receive the COS comments for each submittal. The minimum number of submittals and respective requirements are as follows, unless otherwise indicated in specific facility chapters:

1. Latest Codes, Ordinances, and Regulations: The Engineer shall provide a design that complies with the latest versions of codes, ordinances, and regulations adopted by the COS by the time of the final submittal.

2. Outside Agency and Utilities Review and Approval: The Engineer is responsible for completing review and obtaining approval from all agencies and utilities. The Engineer shall allow sufficient time in the project schedule for all outside agency and utility approval.

3. 30 Percent Design Submittal: Expands upon the CDR and includes preliminary P&IDs, preliminary control strategies per Chapter 8, preliminary civil piping plan, preliminary civil paving, and grading plan, and preliminary technical specifications of major equipment.

4. 60 Percent Design Submittal: Expands upon 30 percent Design Submittal and includes final P&IDs, progress set of control strategies per Chapter 8, progress set of civil plans, preliminary mechanical plans, preliminary architectural plans and elevations, preliminary structural plans, preliminary electrical single-line diagrams and schematics, and progress set of technical specifications.

5. 90 Percent Design Submittal: Expands upon 60 percent Design Submittal and includes complete set of drawings, specifications, and updated control strategies ready for final check by Engineer, outside agencies, utilities, and final COS review comments.

6. 100 Percent Design Submittal: Expands upon 90 Percent Design Submittal and includes drawings, final control strategies, bid documents and technical specifications finalized and ready for bidding, and back checking by the COS against the Engineer’s 90 percent review and the COS 90 percent review comments.

7. Electronic Drawings: The Engineer shall provide an electronic copy of all drawings in AutoCAD with bound reference files on a CD. The AutoCAD version for the drawings shall be determined by COS.

F. Inactive Project Status: Projects that do not demonstrate progress at any stage during the CDR Phase or Design Phase of a project for a period of 365 calendar days will be given an inactive status by the COS.

G. Reactivating Inactive Projects: In order to reactivate a project given ‘inactive project status’, the Engineer shall meet with the COS to:

1. Review current adopted codes, standards, and guidelines.
2. Determine if significant changes to the project are required to meet currently adopted codes, standards, and guidelines.
3. Determine fees that are applicable for reactivated project.
4. Establish schedule for the potential revision and re-submittal of project documents, which may include but not be limited to CDR and associated studies, drawings, and specifications for the duration of the project.

1.13 Bid Phase

A. General: The Bid Phase entails selling bid documents to prospective contractors to obtain competitive bids for a project.

B. The guidelines presented in this section apply to all COS and developer projects.

C. Once the bid documents are finalized, the project can proceed with advertisement, bidding, awarding, and contracting of the work.

D. Alternate Project Delivery: For DB and CMAR, the bid phase requirements may be modified as needed to meet project objectives.

E. The sequence of major Bid Phase events is presented below:

1. Finalize COS procurement documents, where applicable.
2. Advertise for bids.
3. Bid period.
4. Bid opening.
5. Evaluation of bids.
6. Notice of Award (NOA).
7. Notice to Proceed (NTP).

1.14 Construction Phase

A. General: The Construction Phase entails the coordinated activities of the Contractor, subcontractors, Engineer to complete construction activities for the project.

B. Alternate Project Delivery: For DB and CMAR, the construction activities proceed as needed to meet established project objectives. The COS reserves the right to modify the construction activities and other requirements herein to satisfy the COS interests.

C. A list of the major construction activities is provided below:

1. Pre-Construction Conference.
2. Permit acquisition.
3. Final permits issued.
4. Mobilization.
5. Construction and inspection begin.
6. Construction activity with progress meetings, progress reports and pay requests submitted to COS and Engineer.
7. Final equipment and system O&M Manual submittal(s).
8. Start-up, testing, and commissioning.
9. Substantial Completion.
10. Operator training.
11. Final Facility O&M Manual.
12. Project Closeout

D. Maintenance of Plant Operations (MOPO): The Contractor is responsible for MOPO in accordance with the COS Public Works SOP throughout construction, which may require bypass pumping, temporary power facilities, other temporary utilities, temporary treatment facilities, and sequencing construction activities to eliminate or reduce shutdown periods if shutdowns are required and approved in advance by COS. Facilities that must remain in operation include but are not limited to the following:

1. Water treatment, transmission, and distribution facilities.
2. Wastewater collection and treatment facilities.
3. Utilities such as natural gas, telephone, utility power

E. Construction Progress Meetings: The Contractor is responsible for conducting all progress meetings to be attended by the Contractor, Engineer and COS staff and COS representative(s). Progress meeting requirements are as follows:

1. Conducted at a frequency of not less than bi-weekly.
2. Contractor and Engineer shall review construction activities completed since prior progress meeting.
3. Contractor to provide a minimum 3-week look ahead of proposed activities.
4. Contractor to distribute an updated schedule to attendees.
5. Engineer or designated COS representative to prepare sign-in sheet and distribute meeting minutes to attendees.
6. Contractor to provide representatives of subcontractor(s), supplier(s), or manufacturer(s) representatives if requested by Engineer or COS.

F. Substantial Completion: The COS representative(s) or Engineer will make a recommendation in writing when substantial completion of a project is achieved, which includes successful completion of all start-up as well as facility commissioning and testing. The procedure for obtaining Substantial Completion includes the following events:

1. Initial walkthrough with Engineer, Contractor, and COS representative(s).
2. Developing Substantial Completion Punchlist after or during initial walkthrough.
3. Substantial Completion Punchlist items submitted in writing with a schedule for completion to the COS and Engineer.
4. Substantial Completion Walkthrough scheduled.
5. Substantial Completion Punchlist items completed.
6. Follow-up walkthrough completed with Engineer, Contractor, and COS representative(s).
7. Certificate of Occupancy (CofO) or Interim CofO must be issued by COS.

8. Final reviews and inspection of documents and facility by MCESD representative, and AOC or ATCO must be issued.

9. The redlines of the as-built drawings must be submitted at the time of functional testing.

10. Operator Training on all major equipment items must be completed.

11. Beneficial Use: With the above items satisfied, beneficial use by the COS starts from the date of substantial completion notification.

12. COS Council Approval: The Contractor shall send a Substantial Completion Letter with Substantial Completion Punchlist to the Engineer and COS, which indicates that the project has reached substantial completion and that all punchlist items have been resolved. The COS will recommend that the COS Council approve substantial completion for the project.

13. Warranty Notification: The Contractor shall send a Warranty Notification letter to the COS and Engineer. The warranty period starts from the date of substantial completion notification. The warranty period shall be not less than one year from the date of substantial completion.

G. Site Safety: The Contractor is responsible for safely executing construction activities in accordance with all federal, state and local agencies and shall provide the following:

1. Construction Health and Safety Plan, which addresses the following at a minimum:
   a) Health and safety objectives
   b) General safety rules
   c) Lockout/tagout of electrical equipment practices
   d) Safety excavation practices
   e) Work in traffic areas
   f) Contractor’s Safety Officer, training and responsibilities
   g) Confined space entry training and practices
   h) Hazard communication program

2. Construction safety training and documentation.

3. Personal protective equipment.

H. Site Security: The Contractor is responsible for maintaining site security to prevent unauthorized access during construction, which includes the following at a minimum:

1. Temporary fencing around perimeter of construction limits with 'No Trespassing' signs.

2. Minimum of one security guard on duty during nighttime hours.

3. Identification Badges: All COS personnel and staff associated with the Engineer, Contractor, and subcontractors shall be required to wear identification badges with name and current photograph.

4. Additional security features as required by the current COS Security Master Plan.

I. Inspection: The inspection of construction will remain the responsibility of the Owner. The COS may also provide independent inspection to ensure satisfaction that the facility is being constructed to the approved plans and specifications.

J. Storage of Materials and Equipment: The Contractor is responsible for protecting materials and equipment during construction. Store all materials and equipment as follows:

1. Provide storage facilities as needed to protect equipment and materials to protect against weather and corrosion.

2. Maintain access to public and/or COS personnel.

3. Volatile compounds and wastes shall be stored in covered metal containers.

4. Store onsite or offsite in a manner that does not interfere with operation of facilities.

K. Site Cleanliness: The Contractor is responsible to maintain a clean construction site for the duration of the project, which includes the following at a minimum:

1. Maintain site at all times free from accumulation of trash and rubbish.

2. Stack materials such as concrete forms and scaffolding neatly when not in use.

3. Promptly remove splattered concrete, asphalt, oil, paint, corrosive liquids, and cleaning solutions.

4. Daily clean up, which entails organizing surplus materials, and removing trash and debris.

5. Dispose of waste materials in accordance with federal, state, and local laws. Waste materials shall not be buried or burned onsite or disposed of into storm drains, sanitary sewers, vacant land, or waterways.

6. Adequate cleanliness will be a condition of progress payments.

1.15 Project Closeout Phase

A. General: The Project Closeout Phase entails developing and resolving a final punchlist of items after substantial completion, as well as completing as-built drawings for the project.

B. Project closeout shall include the following activities:

1. Initial walkthrough.

2. Develop punchlist after initial walkthrough with Engineer, Contractor, and COS representative(s).

3. Final punchlist items submitted in writing with a schedule for completion to the COS and Engineer.

4. Final walkthrough scheduled.

5. Final punchlist items completed.

6. Final walkthrough completed with Engineer, Contractor, and COS representative(s).

7. As-built drawings completed and submitted to COS for acceptance.

8. Final equipment and system O&M Manuals as well as Final Facility O&M manual submitted to COS for acceptance.

9. Instrument set point list

10. Completion and documentation of start-up, functional testing, validation testing and commissioning

11. Confirm receipt of all spare parts and special tools.

12. Confirmation of property title transfer to the COS.

13. Utility services records transfer and verification.

14. Final acceptance notification.

15. COS city council approves final acceptance.

16. Completion of permit stipulations/requirements related to design and construction.

17. Final acceptance by COS.

18. Release of bonds.

19. Warranty period.

20. Final control strategies.

C. Operator Training: The Engineer shall include requirements for operator training in the contract documents for all equipment, instrumentation, and controls associated with the facility. Training requirements shall be as follows unless indicated otherwise in specific chapters of these Guidelines or in the project specifications:

1. Instruction shall be given by competent and experienced manufacturer's representatives with a minimum of 5 years of relevant experience.

2. All personnel proposed to conduct operator training must submit resumes that demonstrate qualifications and experience for approval by the COS or COS representative.

3. A detailed syllabus of all materials to be covered during training with agenda must be submitted and approved by the COS or COS representative.

4. Training sessions shall be completed during normal working times as approved by the COS. Multiple training sessions for each equipment item will be required, to accommodate all COS staff.

5. Written instruction for manual and automatic operation as well as SOPs.

6. Sign-in sheet for operations.

7. Onsite classroom instruction sessions.

8. Safety precautions including review of lockout/tagout for electrical equipment and panels.

9. Field demonstrations for maintenance procedures.

10. Maintenance summary schedule with all recommended spare parts and expected life.

11. Troubleshooting.

12. Certificates of training completion for all attendees.

D. Destruction of Contract Documents: The Contractor shall turn over or destroy all original and copied sets of Contract Documents in accordance with adopted COS security procedures and Department of Homeland Security requirements.

1.16 Operation and Maintenance Manuals

A. General: Operation and Maintenance (O&M) Manuals specific to individual equipment shall be submitted to the COS at least 30 days prior to functional testing. Final vendor O&Ms with the City's comments shall be provided 30 days prior to the Operational Testing. The Facility O&M manuals shall be in accordance with ADEQ and MCESD requirements for APP and AOC.

B. The Contractor shall submit a total of two (2) complete hard copies of the Facility O&M Manuals including a digital copy in PDF format on CD on the inside cover of each.

C. Hard copies of Facility O&M Manuals shall conform to the following:

1. Binders shall be commercial quality 3-ring binders (3-inch maximum ring size) with durable and cleanable plastic covers. When multiple binders are used, correlate data into related consistent groupings.

2. White, 8-1/2 inch x 11 inch, 20 lb minimum paper for typed pages.

3. Text shall be manufacturer's printed data, or neatly typewritten.

4. Drawings shall be bound in with the text with a reinforced punched binder tab. Larger drawings shall be folded to the size of text pages.

5. Provide a flyleaf for each separate product or piece of operating equipment.

6. Provide a typed description of the product and major component parts of the equipment.

7. Provide indexed tabs.

8. The cover of each volume shall include the title of the project, identity of each separate structure as applicable, and general subject matter covered in the manual.

D. Each Facility O&M Manual shall include the following general information:

1. Date O&M issued.

2. Neatly typewritten table of contents for each volume, arranged in systematic order.

3. Identify the contractor, name of the Engineer, address, and telephone number.

4. List each product required to be included, indexed to content of volume.
   a) List, with each product, name, address and telephone number of:
      1) Subcontractor or installer
      2) Maintenance contractor, as appropriate
      3) Identify area of responsibility of each
      4) Local source of supply for parts and replacement and list of recommended spare parts

5. Identify each product by the product name and other identifying symbols as set forth in the contract documents, including nameplate information and serial numbers for each item of equipment furnished.

6. Include only product data sheets, which are pertinent to specific product. Annotate each sheet to:
   a) Clearly identify specific product or part installed
   b) Clearly identify data applicable to installation
   c) Delete references to inapplicable information

7. Supplement product data with drawings as necessary to clearly illustrate:
   a) Relations of component parts of equipment and systems
   b) Control and flow diagrams

8. Coordinate drawings with information in the project record documents to assure correct illustration of completed installation.

9. Include appendix with written description of Start-up procedures.

10. Provide additional written text, as required to supplement product data for a job-specific installation. Organize in a consistent format under separate headings for different procedures. Provide logical sequence of instructions for each procedure.

11. Provide a copy of each warranty, bond, and service contract issued. Provide an information sheet for the COS, giving:
    a) Proper procedures in event of failure
    b) Instances, which might void warranties or bonds
    c) Life of all bonds and warranties
    d) Start and end date of warranty period

E. Specific equipment and system O&M Manuals shall include the following information as applicable:

1. Contents, for each unit of equipment and system, as appropriate.

2. Description of unit and component parts:
    a) Function, normal operating characteristics, and limiting conditions
    b) Performance curves, engineering data, and tests
    c) Complete nomenclature and part number of replaceable parts
    d) Life of all bonds and warranties (start and end dates)

3. Operating procedures:
    a) Start-up, break in, routine, and normal operating instructions
    b) Regulation, control, stopping, shutdown, and emergency instructions
    c) Summer and winter operating instructions
    d) Special operating instructions for seasonal fluctuations in flow, which includes high flow and low flow periods

4. Maintenance procedures:
    a) Routine maintenance
    b) Guide for “trouble shooting”
    c) Alignment, adjusting, and checking
    d) Disassembly, repair, and reassembly
    e) Safety requirements
    f) Servicing schedule
    g) List of required lubricants

5. Manufacturer’s printed operating and maintenance instructions.

6. Description of sequence of operation.

7. Original manufacturer’s parts list, illustrations, assembly drawings, and diagrams required for maintenance.

8. Predicted life of parts subject to wear.

9. Manufacturer’s recommended spare parts.

F. Contents, for each electrical and electronic system, as appropriate:

1. Description of system and component parts:
   a) Function, normal operating characteristics, and limiting conditions
   b) Performance curves, engineering data, and tests
   c) Complete nomenclature and part number of replacement parts

2. Circuit directories of panelboards:
   a) Electrical service
   b) Controls
   c) Communications
   d) As installed color-coded wiring diagrams

3. Operating procedures:
   a) Routing and normal operating instructions
   b) Sequences required
   c) Special operating instructions

4. Maintenance procedures:
   a) Routine maintenance
   b) Guide to “troubleshooting”
   c) Disassembly, repair, and assembly
   d) Adjustment and checking

5. Manufacturer’s printed operating and maintenance instructions

1.17 Start-up, Functional Testing and Operational Testing

A. General: Start-up, Functional Testing and Operational Testing entails all field adjustments, field tests, calibration, initial operation, and other activities related to providing a complete, operational, and functional facility.

B. Definitions:

1. Start-up: Entails activities associated with initial adjustment, calibration and testing and operation of equipment, mechanical systems, and electrical systems associated with a facility so that functional testing and operational testing can proceed.

2. Functional Testing: Entails demonstration of proper rotation, alignment, speed, flow, pressure, vibration, noise levels, and adjustments as well as demonstrate proper operation of each instrument loop including alarms, local and remote control and equipment functions. This testing shall include generating signals with test equipment to simulate operating conditions in each control mode. Testing shall also include demonstration of all control scenarios and alarms.

3. Operational Testing: Entails continuous operation of a facility for a duration of at least 7-days, unless otherwise approved by the COS Public Works Director. If defects, malfunctions, or deficiencies result in shutdown or partial operation of the facility during the required duration, then the operational test must be repeated. Training shall be prior to operational testing.

C. The roles of the Engineer, COS and Contractor for start-up, and functional testing are as follows and as delineated in this section:

1. Contractor is responsible for all start-up, functional testing, and portion of operational testing.

2. COS is responsible for providing personnel, power, fuel and consumables for duration of operational testing after successful start-up and functional testing.

3. Engineer or designated COS representative is responsible to ensure that start-up, functional testing and validation are completed in accordance with the contract documents.

D. Start-Up, Functional Testing and Operational Testing Plan: The Contractor is required to provide a plan 90 days prior to start-up activities that provides details for all start-up, functional testing, and operational testing for the facility. The plan must include the following at a minimum:

1. All redlines for the facility to the Utilities Division prior to functional testing.

2. A summary description for each piece of equipment and associated systems with detailed start-up procedures, functional testing and validation requirements for each.

3. Schedule for demonstration all manual and automatic modes of operation for all equipment and associated systems.

4. A maintenance schedule for each piece of equipment that covers the duration of Start-Up, Functional Testing, and Validation.

5. Description of utility power and/or standby power source(s) to be used to operate the facility during start-up,

6. Summary of satisfactory factory test results for equipment where factory testing was completed certificates of completion.

7. Summary of manufacturer's services for equipment and instrumentation where required, which includes:
   a) Certificate of proper installation
   b) Documentation forms that track all start-up activities
   c) System validation activities, which includes installation, calibration and loop testing for all instrumentation and controls per Chapter 8 requirements

8. Overall schedule that illustrates duration of all start-up, functional testing, and validation.

E. Validation Duration: The Contractor is required to provide continuous operation of facility for validation as part of start-up, functional testing and validation in accordance with the following:

1. Validation Duration for Non-Treatment Facilities: For facilities that do not entail treatment of water or wastewater to meet regulatory treatment standard(s), validation testing shall be not less than 7 continuous days.

2. Validation Duration for Treatment Facilities: For facilities that entail treatment of water or wastewater to meet regulatory treatment standard(s), validation testing shall be not less than 14 continuous days.

3. If the validation testing is interrupted or stops the operation of the facility for any of the following reasons, the Contractor must repeat the validation test:
   a) Failure of mechanical equipment or system.
   b) Failure of electrical equipment or system.
   c) Failure of instrumentation or control equipment or system.

F. If a certified licensed operator is required, the contractor shall utilize an appropriate licensed City operator. The Contractor is required to provide all supervision, manufacturer's services, labor, tools, materials, maintenance, fuel, chemicals, lubricants, measurements and equipment to successfully complete Start-up, Functional Testing and Validation, which includes the following:

1. Start-up and validation tests of each piece of equipment and system furnished as part of the project.

2. Assistance to service engineers and technical directors of installation for equipment installed as part of the project shall be provided by the Contractor.

3. Procedures and instructions dictated by manufacturer's representatives as representatives will not be present at all times. The COS or COS representative(s) will determine when representatives will be required.

4. Resources necessary to maintain the schedule as determined by the COS of COS representative, including initial total facility start-up.

G. The following shall be inspected and tested prior to validation testing to ensure proper installation and operation:

1. Bearings.

2. Drives.

3. Motors.

4. Pumps.

5. All process Equipment and Systems.

6. HVAC Equipment and Systems

7. Chemical Equipment and Systems.

8. Piping Systems, Valves, and Leak Test.

9. Electrical Equipment and Systems

10. SCADA, Instrumentation, PLCs, control systems, setpoints, ranges, and Controls per Chapter 8 requirements.

1.18 Commissioning

A. General: Commissioning entails the planned, systematic process to place a facility into routine operation after successful start-up such that the Contractor can transition operation to the COS. Commissioning is performed after successful functional testing and operational testing.

B. Commissioning entails the following phases for a duration of at least 60 days:

1. Phase 1 – Start-up and operation of facility in manual mode by Contractor for a duration of not less than 10 consecutive days.

2. Phase 2 – Start-up and operation of facility in automatic mode by Contractor through control system for a duration of not less than 20 consecutive days.

3. Phase 3 – Transition to automatic operation of facility to supervision under COS personnel for a duration of not less than 30 consecutive days.

C. Responsibilities:

1. Contractor: If a certified licensed operator is required, the contractor shall utilize an appropriate licensed City operator. Provide all preventive and unscheduled maintenance of all equipment and facilities, which includes but is not limited to:
   a) Lubricants and lubrication in accordance with manufacturer's recommendations.
   b) Preventive maintenance and adjustments in accordance with manufacturer's recommendations.
   c) Exercising all equipment not in use during Commissioning phases.
   d) Repair of equipment and provide parts.
   e) Periodic check of alignment, vibration, and noise levels in accordance with manufacturer's recommendations.
   f) Maintain logs and maintenance records.
   g) Implement modifications identified by Engineer.
   h) Other responsibilities as determined by the COS.

2. Owner (COS): Provide the following:
   a) Electrical power, chemicals, potable water, and service water required for facility operation.
   b) Laboratory analyses required for discharge permits and to verify facility performance.
   c) Review and logging of personnel training.
   d) Assist Engineer with evaluation of facility performance.
   e) Assist Engineer with identifying modifications to be implemented by the Contractor.

3. Engineer: Provide the following:
   a) Act as liaison and coordination between Contractor and Owner.
   b) Evaluate facility performance.
   c) Identify modifications to be implemented by the Contractor.
   d) Other responsibilities as determined by the COS.

1.19 Letters of Compliance

A. A letter from the Engineer stating that construction is substantially complete and in compliance with the approved Contract Documents shall be provided to the COS.

B. A letter of final completion from the Engineer stating that all work on the project is completed shall be provided to the COS.

1.20 As-Built Drawings

A. General: The Contract Documents shall require the Contractor to maintain a working set of drawings that record all changes made through construction on full size (24 inch x 36 inch) set of drawings.

B. The Contractor is responsible to prepare as-built drawings in accordance with the following:

1. Reflect all changes and revisions that result from construction and include change orders, field revisions, and all other written interpretations and clarifications issued for the project.

2. Mark drawings legibly in ink with dimensions, to record actual construction.

3. Utilize a professional surveyor licensed in the state of Arizona for elevations and horizontal control coordinates.

C. The Engineer is responsible to include the following for as-built drawings:

1. Require Contractor to submit as-built drawings at final walk-through.

2. As part of the project scope, incorporate all as-built drawing changes compiled by the Contractor.

3. An “As-Built Certification” statement on the cover sheet and on each individual sheet of the as-built plans shall be signed and sealed by a Registered Professional Engineer or a Registered Land Surveyor. The Certificate shall be in all capital letters and shall read:

   I HEREBY CERTIFY THAT THE ‘AS-BUILT’ MEASUREMENTS AS SHOWN HEREON WERE MADE UNDER MY SUPERVISION OR AS NOTED AND ARE CORRECT TO THE BEST OF MY KNOWLEDGE AND BELIEF.

   DATE:_____ BY:_____

D. Following final walk-through the Contractor shall submit the as-built drawings to the Engineer for review and acceptance.

E. The Contractor and Engineer shall follow the Bond Release procedure through the COS Public Works Department for releasing bond and submitting final mylars.

F. As-built drawings shall be submitted to the COS Project Manager in accordance with the following:

1. Include GPS coordinates and elevations on civil drawings for all structures.
2. Provide three (3) full-size (24 inch x 36 inch) bond paper copies.
3. Provide three (3) electronic copies of files in PDF format.
4. Provide three (3) electronic copies of files in AutoCAD (version determined by COS) with bound references. Include all configuration, settings, and setup information.
5. Provide three (3) electronic copies of files (in PDF and AutoCAD) with all configuration information (to include all settings and setup information).

G. Specifications shall also be provided to COS Project Manager in accordance with the following:

1. Combined project specifications in PDF format.
2. Individual project specifications separated by division in PDF format.

CHAPTER 2 CIVIL DESIGN

2.01 General

A. The purpose of this chapter is to set provide civil design guidelines for all new facilities as well as for retrofitting existing facilities. The following should be considered minimum guidelines to reference current building codes, development standards, and engineering standards. This is intended to be an introduction to site requirements, and should not be considered an all-inclusive list.

B. The facility shall be positioned and the site developed to ensure a uniform soil bearing condition. The footing and floor shall be placed on either native earth material or structural fill. The facility shall not be situated where a portion of the foundation is on native material and a portion is on fill material.

C. Site grading shall be sloped to drain away from facility structures, except for structures designed to collect storm water on the site.

2.02 Site Survey, Horizontal and Vertical Control

A. General: The Engineer shall provide a site survey for facilities.

B. The horizontal and vertical control for the project shall be per the City of Surprise Datum, as noted below. The Engineer shall contact the COS Real Estate/GIS department regarding site tie-in benchmark requirements.

C. Site Description: The location of the facility shall be described and defined by the Engineer on maps and drawings. At a minimum the Engineer shall:

1. Prepare a location map showing the regional location of the site with Assessor’s Parcel Number (APN).

2. Prepare a vicinity map depicting the site location relative to streets and recognizable features.

3. Prepare a survey control map identifying the site by township, range, section, basis of bearing, basis of coordinates, and other existing survey control features including benchmarks.

4. Provide project specific topographic mapping, locations, and descriptions of all existing and proposed easements.

D. The Engineer shall perform a survey as part of the design effort and field verify locations of existing facilities. The survey shall include the following at a minimum:

1. Existing benchmarks shall be used and/or re-established, including two permanent brass benchmarks and two horizontal control points located on or adjacent to the site at a location that is not likely to be disturbed during construction. All benchmarks shall be referenced to NAVD 88 Datum.

2. Horizontal control shall utilize the GDACS survey for its basis. The preferred projection is the Maricopa County Low Distortion Projection, but, with prior written approval from the COS, may instead be in the existing Arizona State Plane Coordinate System, Central Zone.

3. Utilities research, which includes public and private utilities. Field verification / potholing of the location of all existing utilities and identification of design conflicts.

4. Building footprint and limits of other site development work.

5. Record of Survey map showing locations of existing property corners and monuments that may be disturbed during construction.

6. File Record of Survey with the County and prepare legal descriptions for the site and all proposed permanent and temporary construction easements. Engineer shall also locate recording information for all existing easements affecting the site. Format of documents shall be in accordance with COS Engineering Development Standards.

7. Prepare topography of site to be used for design including aboveground and underground utilities, which includes obtaining invert elevations for each pipe entering or leaving each manhole, and a manhole rim elevation, for storm drainage and wastewater collection lines; valve operating nut locations and elevations for water mains and reclaimed water mains.

8. Prepare a survey control sheet showing basis of bearing, basis of coordinates, and benchmark horizontal and vertical data.

9. Profile(s) and/or cross-section(s) as required.

2.03 Setbacks

A. Adequate setback from property lines shall be provided in accordance with COS planning and development standards, and the noise and odor setback requirements established by ADEQ and MCESD. Setback requirements vary with site location, treatment process, and mitigation efforts for noise and odor at the site. The Engineer shall be responsible for establishing the setback distances that apply to the project site, as a part of the CDR.

B. Establish limits of site work. Sufficient setback shall be provided to allow for cut or fill transition to existing contour elevations at property lines; and to provide for access and maintenance.

2.04 Vehicle Access

A. Fire Department Access: The Engineer shall incorporate site access and egress for COS Fire Department vehicles having the following characteristics:

1. Minimum 20-foot driveway width is required per IFC and the Fire Department Emergency Access and Detail Guide (Guide is available online at the COS web site).

2. Turning radii shall be per AASHTO WB-50 scale at all entrances and driveway intersections where fire truck access is required.

3. The site design shall also accommodate the Building Access Requirements for Fire Department, in accordance with the COS Engineering Development Standards.

B. COS service vehicle access to major components shall be incorporated into the site layout. Access requirements will vary by site, based on the anticipated activities, which may include solid waste collection vehicles, mobile cranes, chemical delivery trucks, and/or specialized well maintenance vehicles. Actual site access requirements will be based on the conceptual design shown in the CDR, with concurrence by the COS.

2.05 Traffic Study

A. The Engineer is responsible for preparing a traffic study or traffic impact analysis for the project unless a written exemption is provided by the COS Traffic Engineer. Detailed requirements of the traffic study are contained in Chapter 4 of the COS Engineering Development Standards.

B. The traffic study shall include, where appropriate, review and recommendations for chemical truck deliveries and traffic flow impacts. Access to the site by chemical delivery trucks shall be accomplished out of the normal flow of traffic on adjacent public streets.

C. The traffic study shall also disclose the location of learning facilities (schools, daycare centers, etc.) in the vicinity of the site, and shall include planning to minimize impacts of chemical deliveries on the learning centers.

2.06 Drainage Report

A. The Engineer shall prepare a Drainage Report for the facility in accordance with the requirements of Chapter 5 of the COS Engineering Development Standards, and the referenced documents contained therein. The Preliminary Drainage Report shall be submitted in support of the project CDR, and the Final Drainage Report shall be submitted with the 60 percent design review documents.

B. As a part of the drainage study, the Engineer shall identify each drywell by size and location (latitude/longitude), and shall prepare submittals for NOIs to ADEQ, with a copy to the COS Stormwater Section. Registered drywells shall be used only for stormwater.

C. Areas that may receive substances other than stormwater, or stormwater that becomes contaminated with other substances, shall be isolated from the stormwater system (including drywells and storm drain piping either on- or off-site). Disposal of substances that that are not considered stormwater shall be addressed in the Stormwater Pollution Prevention Plan for the project.

D. For specific chemicals that may be in use at a site, refer to Chapter 6 of these standards and guidelines for containment and disposal requirements.

E. The drainage study shall take into consideration adjacent facilities, including neighboring HOAs , as a part of the recommended site drainage improvements.

2.07 Stormwater Management

A. Stormwater Management Plan (SWMP): The project SWMP represents the implementation of the Drainage Report on the project site, including the temporary measures that apply during construction. The SWMP also forms the basis for the SWPPP if the extent of disturbance is greater than one acre.

B. Essential elements of the SWMP are included in the checklist for the preparation of a SWPPP, in Appendix 5-1 of the COS Engineering Development Standards. Note that unless specifically approved otherwise, all

water, reclaimed water, and wastewater facility sites shall be developed with surface retention basins, dry wells, storm drains, drainage channels, and other drainage appurtenances designed and permitted in accordance with the provisions of Chapter 5 of the COS Engineering Development Standards.

C. Stormwater Pollution Prevention Plan (SWPPP): Any development that disturbs more than one acre within the COS is required to prepare a SWPPP. For convenience, a checklist for the preparation of a SWPPP is contained in Appendix 5-1 of the COS Engineering Development Standards.

D. Notice regarding development in a floodplain: Generally, development within or modification of a floodplain is discouraged. The Public Works Director or designee must approve locating a facility in a flood plain. If development within a floodplain is required, the Engineer shall contact the FCDMC to determine if an application for a Floodplain Use Permit is required.

2.08 Grading

A. The Engineer shall provide a grading plan for the facility in accordance with the requirements of the COS Engineering Development Standards.

B. Grading shall be coordinated with the Drainage Report, SWMP, and the landscaping plans for the site. Slope stabilization, such as rip-rap drainage ways and spillways into basins, shall be added wherever the potential for erosion exists.

C. Unless specifically noted otherwise, the intent of the site design is to have all surfaces covered with pavement, compacted aggregate base course, or landscaping rock to control the generation of dust on-site. Final grading, prior to placement of surface course, shall allow for the proper material thickness.

D. The developer and/or Engineer shall be responsible for ensuring that the dust control NOI is filed with MCESD, and that construction procedures comply with applicable federal, state, county, and local dust control regulations.

2.09 Paving

A. The COS utilizes a variety of pavement surface courses on water, reclaimed water, and wastewater facility sites. Based on the nature of traffic loadings at the site, and the type of soils encountered, types of pavement that may be utilized include but are not limited to the following:

1. Asphalt Concrete (AC) pavement over compacted aggregate base course. Where AC pavement is utilized in traffic areas, the edges of pavement shall be protected by concrete ribbon curbs per MAG Detail 220, Type B.

2. Fine crushed rock (0.25 inch minus) over compacted aggregate base course.

3. Chip seal course (0.375 inch) over compacted aggregate base course.

4. Compacted aggregate base course with no topping.

B. The Engineer shall contact the COS during the CDR Phase of the project to determine the type of pavement desired. When the desired type of pavement has been determined, the design of the pavement section shall be based on the results of the geotechnical investigation (Chapter 3). Design of pavement and thickness of aggregate courses shall be determined by the Engineer, and shall generally be in accordance with procedures established in Chapter 3 of the COS EDS.

C. Due to the large equipment required for service and maintenance, AC pavement will not be required at well sites. The Engineer will design the thickness of the aggregate base course traffic areas and the decomposed granite cover on the balance of the site to accommodate a well drilling rig.

2.10 Yard Structures

A. **Perimeter Walls:** Unless specifically noted otherwise, all new water, reclaimed water, and wastewater facility sites shall be enclosed with an 8-foot tall (above finished grade) concrete masonry unit (CMU) wall. The wall shall be constructed of nominal 8- x 8- x 16-inch blocks as presented in Figure 2.1. Texture of the blocks (i.e., plain face, single score, split face, or a combination thereof) and integral color requirements will be selected to match, to the greatest extent possible, the theme walls of the adjacent developments.

Prior to the start of construction of the perimeter wall, the Contractor and/or the Masonry Subcontractor shall, upon request, build a temporary sample wall to confirm the intent of the developer and the COS. Size of the sample wall will be as requested by the COS, but in no case larger than 8 feet long by 4 feet high (or 4 feet long by 8 feet high). The sample wall shall be constructed with the textures, patterns and integral colors specified. Following review and approval by the COS and the adjacent developer, the perimeter wall may begin construction. The sample wall shall remain on site until the perimeter wall is completed.

B. **Access Gates:** Entrance gates at water, reclaimed water, and wastewater facility sites shall be a rolling gate as presented in Figure 2.2. Except where specifically noted otherwise, the entrance gate shall be manually or automatically operated as determined by the facility security requirements, and manual gates shall be furnished with a locking hasp that includes space

for two padlocks. Manual gates shall be provided with spare conduits for future automatic operation and security features. Finish color of the gate will be selected by the COS and adjacent developer, based on theme colors of adjacent developments.

C. **Service Entrance Station Access:** Provide a separately fenced and gated area for APS in accordance with Chapter 7, 7.20.

The Engineer shall submit a detailed plan for the fenced APS area as a part of the CDR, and shall submit the plan to APS for their review and acceptance.

D. **Solid Waste Enclosures and Vehicle Access:** Enclosures for solid waste bins, and solid waste vehicle access route, shall be provided in accordance with the details and standards contained in Chapter 2 of the COS EDS.

E. **Potable Water Meter Location:** The meter on the potable water service to the site shall be located in a meter box that is placed outside the perimeter wall. Other site and facility water metering requirements shall be added to the site per COS EDS such that a water balance can be performed.

2.11 Architectural

A. Architectural standards for water, reclaimed water, and wastewater facility sites can vary widely, due to the influence of the existing (and planned) surrounding developments. For this reason, conceptual architectural features must begin during the planning stage of the project, at the start of the CDR phase, and will be accomplished in accordance with the SUDC.

B. When new facilities are being added to COS water and wastewater sites, the orientation of facilities shall take into consideration the potential for future solar power at the site.

2.12 Landscaping

A. Similar to the above discussion on architectural standards, the landscaping concepts are formed during the planning stage, using the SUDC. The landscaping design is then developed in accordance with Chapter 8 of the COS Engineering Development Standards, and submitted to the Community Development Department for review and approval.

B. Coordinate conflicts between SUDC and the COS Security Master Plan with regard to trees and other landscaping features near perimeter walls. In general, security requirements should supersede SUDC criteria.

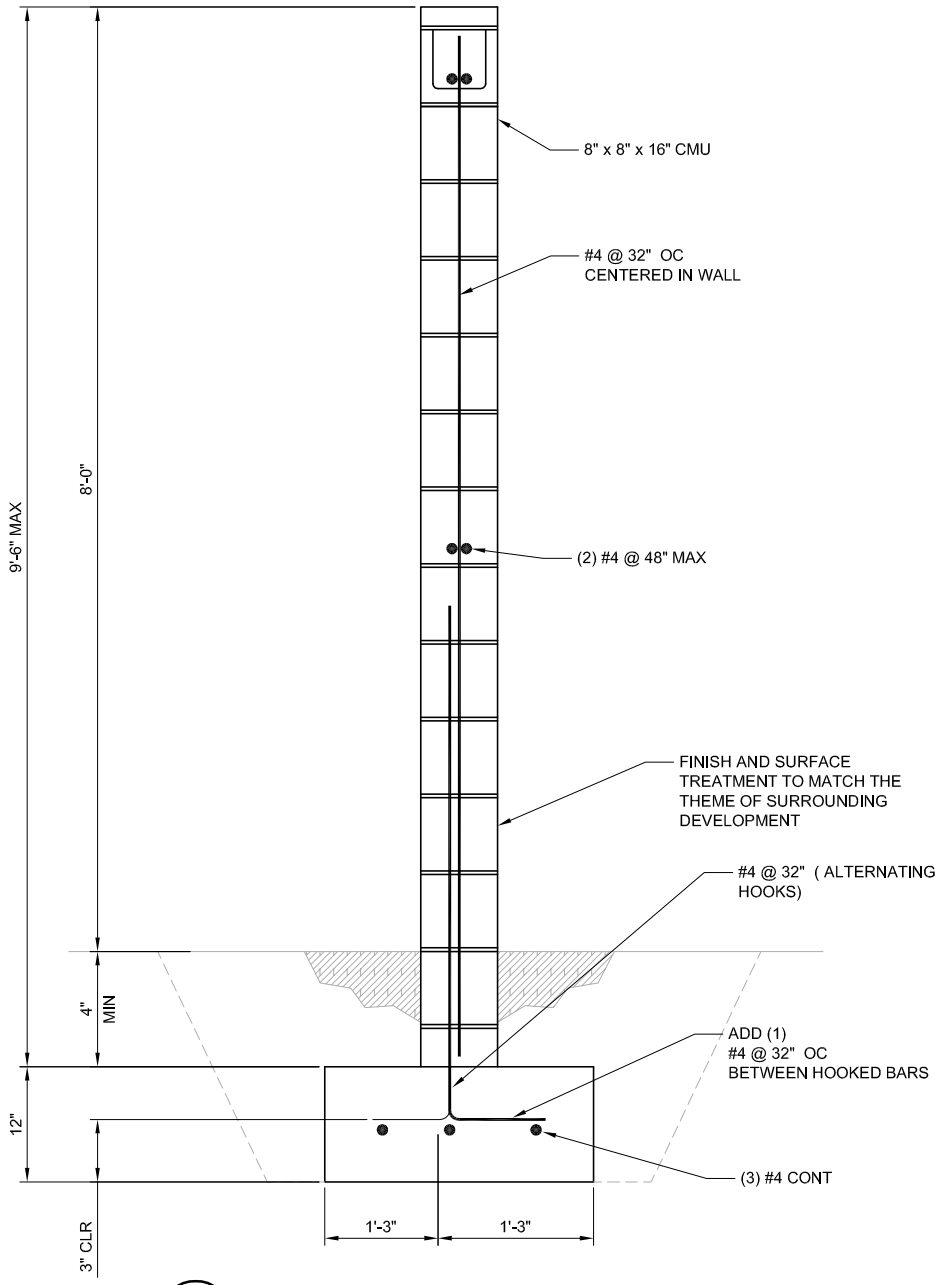

A PERIMETER WALL DETAIL

FINAL

REVISIONS	DWN	APVD	APVD	DATE

CITY OF SURPRISE

Maricopa County, Arizona

Water and Wastewater Guidelines

DESIGNED JBR
DRAWN ARE
CHECKED
APPROVED
APPROVED
DATE APRIL 2011

SURPRISE
ARIZONA

PERIMETER WALL

SCALE

FIGURE	REV.
2.1	0

NOTES:

1. NUMBER AND SPACING OF POSTS PER GATE MANFACTURER
2. SQUARE STEEL POST 8 FT HIGH (TYP). SIZED PER GATE MANFACTURER. EMBED PER GATE MANFACTURER. SET IN STEEL PIPE SLEEVES.

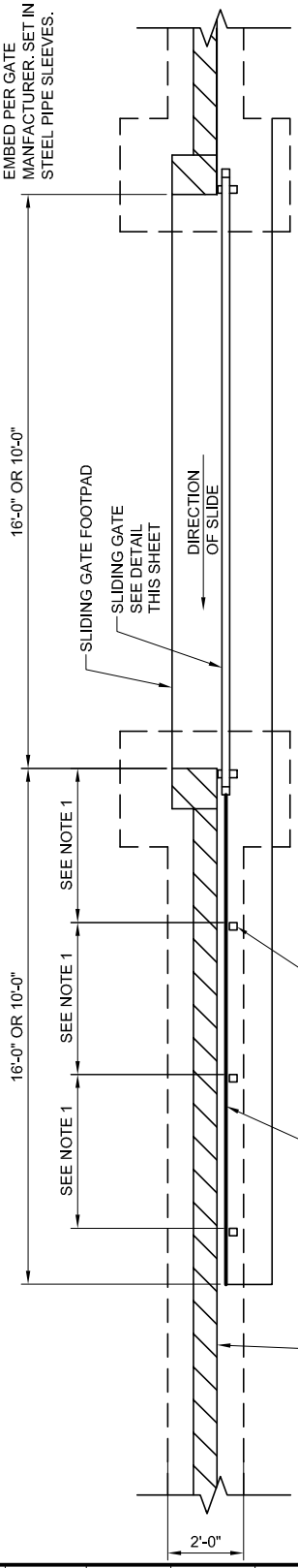

SLIDING GATE PLAN

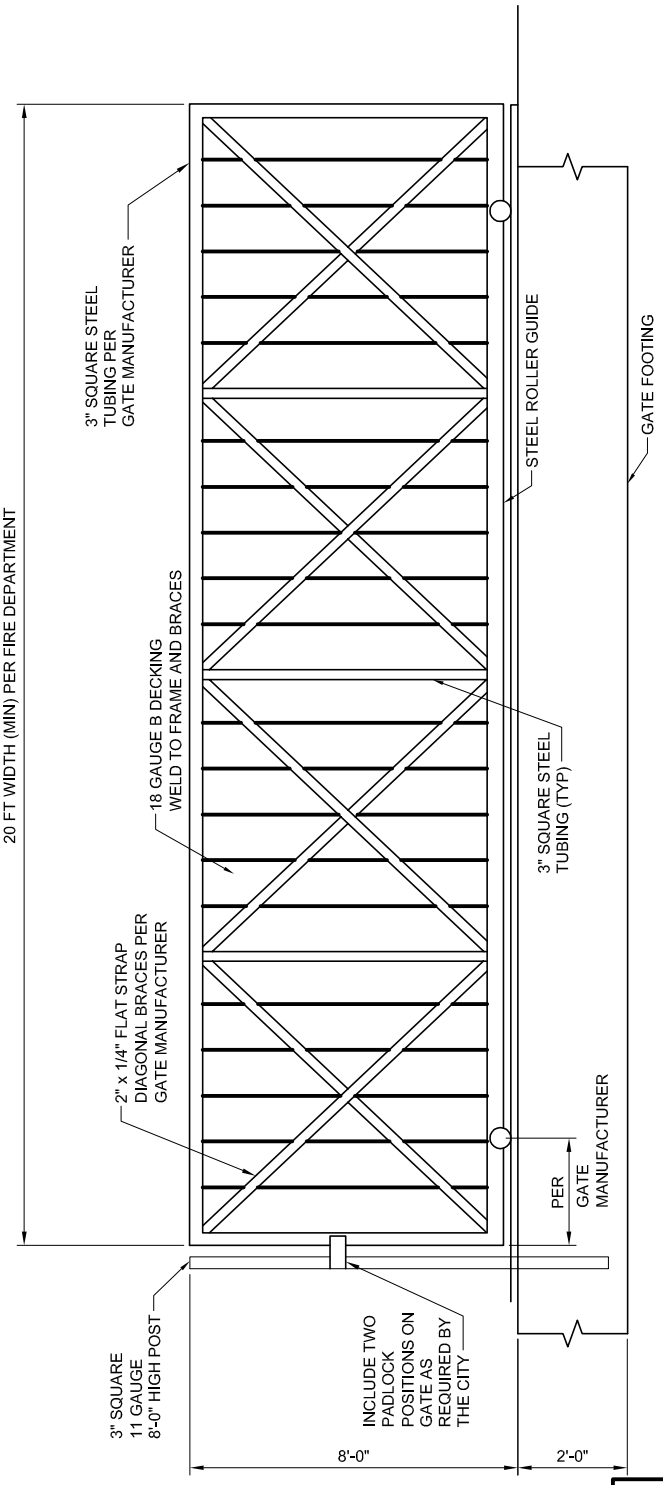

SLIDING GATE DETAIL

FINAL

REVISIONS	DWN	APVD	APVD	DATE

CITY OF SURPRISE

Maricopa County, Arizona

Water and Wastewater Guidelines

DESIGNED JBR
DRAWN ARE
CHECKED
APPROVED
APPROVED
DATE APRIL 2011

SURPRISE ARIZONA

SLIDING ACCESS GATE

SCALE

FIGURE	REV.
2.2	0

CHAPTER 3 GEOTECHNICAL DESIGN

3.01 Geotechnical Investigation

A. General: Geotechnical services related to design of utility facilities shall be provided by a Geotechnical Engineer experienced in geotechnical evaluation of utility sites. Geotechnical evaluations and recommendations shall be conducted by a qualified geotechnical professional who is an Engineer with current professional registration in Arizona. The Geotechnical Engineer's qualifications shall include:

1. Prior utility project experience.
2. Prior local project experience, including knowledge of area flood patterns and groundwater characteristics.
3. Knowledge of local soil conditions, geological conditions as well as construction practices.

B. Laboratory Requirements

1. The laboratory performing testing associated with the project shall be AASHTO accredited and possess the knowledge and experience to perform the required testing in accordance with local agency practices and applicable standards such as those contained in ASTM, AWWA, and IBC. The laboratory technicians shall have the experience necessary to perform the required tests and shall work under the supervision of an individual having a minimum of 5 years of relevant experience. Any subcontracted tests shall also be performed by a laboratory meeting the above requirements.

3.02 Geotechnical Report

A. Site Conditions: The Geotechnical Engineer shall be responsible for providing an evaluation of the site to determine the minimum number and the depth of exploratory borings required for the design.

1. The depths of exploratory borings shall take into account the elevation of structure foundations and invert elevations of proposed pipelines. Review of available aerial or geologic maps shall be performed and may indicate the need for additional and/or deeper borings at the discretion of the Geotechnical Engineer.

2. Borings or test pits shall be spaced at intervals no greater than 1,000 feet along the alignments of pipelines. Pipeline alignments crossing through areas containing faults, fissures, steep slopes, bedrock, expansive soils, or areas of unstable soils shall be performed at a decreased spacing of 500 feet or less as determined by the Geotechnical Engineer. Borings shall also be located within the footprints of proposed structures and at decreased spacings at bore-and-jack locations and micro-tunnels. Borings for structures and/or pipelines shall extend to a depth of at least 10 feet below the structure foundation and/or invert elevations of proposed pipelines unless the actual pipeline invert elevations are provided, then borings shall extend to a depth of at least 5 feet below invert elevations. Trenching shall be performed at locations where pipelines or structures cross areas containing faults or fissures at the discretion of the Geotechnical Engineer.

3. Test pits shall be excavated to supplement or substitute for the soil borings where permitted by the site features and where appropriate. Test pits should be used to evaluate relative degree of excavation difficulty, soil stability, depth to groundwater and infiltration rates, presence of cobbles and boulders, and depth to bedrock and its characteristics.

4. The Geotechnical Engineer shall be responsible to obtain encroachment permits and/or traffic control plans as applicable to perform explorations within public rights-of-way in accordance with COS Policy.

5. Penetration blow counts shall be obtained using a split-spoon (SPT) sampler or a ring-lined sampler as deemed appropriate by the Geotechnical Engineer based on anticipated soil type. Penetration blow counts shall be obtained using an SPT sampler within the anticipated structure location and/or pipe zone along proposed pipeline alignments to aid in the formulation of E' values. Pocket penetrometer tests should be performed on fine-grained soil samples recovered from the borings and recorded on the boring logs.

B. Laboratory Testing: Laboratory testing on soil samples recovered from the exploratory borings shall include the following:

1. Particle size distribution at each boring location (ASTM C 136).

2. Atterberg Limits at each boring location (ASTM D 4318).

3. In-place moisture content and dry density for each ring-lined sample interval within each boring location (ASTM D 2937).

4. Consolidation and/or expansion for fine-grained soils at each structure location and at maximum 3,000-foot intervals for pipelines (ASTM D 2435 or the 2006 IBC).

5. Unconfined compressive strength for fine-grained cohesive soils at each structure location (ASTM D 2166).

6. Soil cohesion and strength properties at each structure location and at maximum 3,000 foot intervals for pipelines (ASTM D 3080).

7. Soil resistivity tests for in-place moisture and saturated conditions at each structure location (ASTM G 57).

8. Maximum laboratory dry density as deemed appropriate for the evaluation of E' and soil shrinkage (ASTM D 698 or D 1557).

C. Soil Corrosivity Testing: Testing and analysis shall be done during the Geotechnical Evaluation phase and shall include the following to evaluate the corrosion potential of the site soils to buried metal pipelines and other structures, as deemed appropriate by the Engineer.

1. Field Resistivity Testing: Field resistivity testing shall be performed at spacings of 500 feet along proposed pipeline alignments using the Wenner 4-pin method. Closer spacings may be required where frequently varying soil conditions are encountered, as determined by the Geotechnical Engineer. The resistivity test shall be performed in accordance with ASTM G57, and should measure ground resistivity levels to the invert depths of the proposed pipeline, at a minimum of 2-, 5-, 10-, and 15-foot depth intervals.

2. Laboratory Testing: Laboratory testing shall be performed on samples recovered from the borings at half and full-depth intervals along the proposed pipeline, and should include the following:
   a) Miller box soil resistivity per ASTM G57.
   b) Water soluble chlorides per ASTM D512C.
   c) Water soluble sulfate per ASTM D516A.
   d) Soil pH per ASTM D2976/D4972/G51.
   e) Red Ox (oxidation-reduction) potential per ASTM D1409.
   f) Sulfides per ASTM D4658.

D. Report Content: Geotechnical Evaluation reports shall contain the following information at a minimum:

1. Review of available previous studies performed on or adjacent to the subject site, and a discussion of the findings.

2. A scaled plan showing the location of the borings or test pits.

3. Boring logs showing drilling equipment used, depth drilled, surface elevation, depth to groundwater observed during drilling and measured at least 24 hours after completion of drilling, and complete soil descriptions per ASTM D 2488. Boring logs should also list the logger or geologist observing the drilling, and list any special surface or subsurface conditions observed.

4. Depths to cemented soils or caliche and hardness and degree of cementation, if encountered, and drilling rates.

5. Site description including existing structures, roadways, and subsurface improvements, if known, special geologic or drainage features, site relief, fissures, vegetation, and description for adjoining parcels.

6. Results of laboratory testing, including a description of the test methods performed.

7. A summary of the subsurface materials encountered, including any artificial fill, cemented soils, expansive or hydro-collapsible soils, and corrosive soils, and thickness of existing pavement sections, if appropriate, including asphalt concrete and aggregate base thicknesses.

8. A summary of anticipated loads and types of structures proposed.

9. Site class per Table 1613.5.2 of the International Building Code.

10. Representative latitude and longitude coordinates in decimal degrees to four decimal places for the purpose of determining the site seismic acceleration.

11. Geotechnical Evaluation reports shall be current within one year of the date of issue. Reports older than one year shall be accompanied by an update letter that addresses the current condition of the site and any supplementary recommendations.

E. Geotechnical Parameters: The following are minimum geotechnical parameters to be addressed:

1. Lateral active and passive soil pressures, including static and seismic pressures for walls, manholes and vaults, include a pressure diagram.

2. Lateral at-rest soil pressure.

3. Total and differential settlement for each type of foundation system.

4. Design allowable bearing capacity for each type of foundation system.
5. Minimum footing width and embedment.
6. Recommended foundation system.
7. Modulus of subgrade reaction for design of mat-type foundations, when applicable.
8. Coefficient of friction for mat-type and spread footing foundations.
9. Allowable axial capacities, both compressive and uplift, for drilled shaft foundations including group factors for drilled shafts in groups where deep foundations are anticipated.
10. General construction recommendations for drilled shaft foundations including anticipated excavation methods, slurry or casing recommendations, and a recommendation for non-destructive shaft integrity testing (CSL or PIT) where deep foundations are anticipated.
11. Post-tensioned foundation recommendations, where applicable, based on the 2006 IBC.
12. Design criteria for thrust blocks.
13. Groundwater considerations.
14. Recommendation for a rippability study, if warranted, where cemented soils or bedrock are encountered.
15. Slope stability analysis as deemed necessary where existing or proposed steep slopes are to be utilized on site.
16. Corrosive soils and mitigation criteria.
17. Considerations regarding concrete and steel reactivity.
18. Expansive soils and mitigation criteria.
19. Collapsible soils and mitigation criteria.
20. Locations and extent of fissures and mitigation criteria.
21. Document potentially contaminated soils and groundwater, and note on the boring logs at the appropriate depth interval.
22. Site coefficients for mapped spectral response accelerations at short period and 1-second period, F_a and F_v.

23. Mapped spectral accelerations for short period and 1-second period, S_s and S_1.

24. Seismically induced lateral earth pressures, include a pressure diagram.

25. Concrete mix design criteria based on soluble sulfate content of soils.

26. Exterior concrete flatwork recommendations.

F. Groundwater: The Geotechnical Engineer shall evaluate and provide considerations for the following groundwater conditions where applicable:

1. Dewatering during construction.

2. Permanent dewatering, if required.

3. Target dewatering elevations.

4. Anticipated dewatering induced settlements for any existing structures.

5. Anticipated seasonal groundwater level fluctuations.

G. Site Preparation and earthwork: The Geotechnical Engineer shall provide recommendations for the following:

1. Excavation constraints (rock, caliche, blasting, etc.) relative to the site and considerations for any specialized types of equipment if anticipated.

2. Earthwork specifications including over-excavation depths, testing methods and frequencies, maximum lift thickness, moisture conditioning recommendations, and estimated range of soil shrinkage values.

3. Subgrade stabilization recommendations where soft, wet, or unstable soils are anticipated to be encountered including recommendations for geogrid and/or filter fabric and imported stabilization rock as deemed appropriate. Recommendations shall be made regarding the specific geotextile product as deemed appropriate for the anticipated soil conditions.

4. On-site and imported structural fill criteria, including maximum or minimum values as applicable for soil gradation, plasticity, swell, solubility and chemical composition.

5. Identification of unsuitable soils and removal and disposal recommendations.

6. Stability of temporary excavation slopes, with maximum allowable slope ratios.

7. Stability of permanent fill and cut slopes, with maximum allowable slope ratios.

8. Benching recommendations for fill slopes.

9. Mitigation of cut/fill transitions beneath improvements as applicable.

10. Pavement design for both flexible and rigid pavement for design ESAL values of 1,100, 7,160, 33,130, and 121,000, which correspond to Traffic Index of values 4, 5, 6 and 7, respectively.

11. Anticipated site drainage measures regarding finish grades adjacent to foundations and considerations for subdrains where applicable.

12. Protection of existing structures where earthwork is to be performed adjacent to any existing improvements, including safe setbacks for new excavations.

H. Pipelines: Geotechnical services related specifically to design of pipelines shall be provided by a Geotechnical Engineer experienced in geotechnical design of pipelines and associated structures. The Geotechnical Engineer shall be responsible for determining the specific design criteria and site conditions as described in these guidelines. In addition the Geotechnical Engineer shall provide recommendations for the following:

1. Trench Excavatability and sidewall setbacks.

2. E' Values for each boring location at half-depth and full-depth of the boring.

3. Allowable excavation slopes.

4. Vertical soil pressures.

5. Minimum trench width.

6. Bedding material, pipe zone, and trench backfill for trenches in both paved and unpaved areas.

7. The use of geotextiles, where necessary to separate fine-grained soils from bedding or pipe zone backfill materials.

8. Suitability of native soils for backfill and/or processing requirements.

9. Coefficient of friction between pipe materials and soil within pipe zones including CLSM.

10. Backfill and stabilization recommendations for trenches excavated below static groundwater levels including the use of geosynthetics where deemed appropriate by the Geotechnical Engineer.

11. Recommendations to mitigate pipe float during backfilling.

I. Reservoirs: Geotechnical services related specifically to design of reservoirs shall be provided by a Geotechnical Engineer experienced in geotechnical evaluation of water storage reservoir sites. The Geotechnical Engineer shall be responsible for determining the specific foundation design criteria and site conditions as described in these guidelines. In addition the Geotechnical Engineer shall:

1. Evaluate seismic parameters specific to the proposed reservoirs.

2. Provide both geotechnical data and recommendations specific to foundations supporting reservoirs, including appropriate values for lateral support, bearing capacity and modulus of subgrade reaction values for reservoirs supported on large mats.

3. Provide an evaluation of soil corrosivity and recommendations for cathodic protection.

4. Provide backfill and drainage recommendations for soils used as wall backfill for subsurface reservoirs.

5. Provide soil stabilization and/or specific earthwork specifications for soils supporting large reservoir foundations, including stabilization recommendations in the event that subsurface soils become saturated.

J. Pump stations and lift stations: Geotechnical services related specifically to design of pump stations or lift stations shall be provided by a Geotechnical Engineer experienced in geotechnical evaluation of pumping facilities and subsurface vaults. The Geotechnical Engineer shall be responsible for determining the specific foundation design criteria and site conditions as described in these guidelines. In addition the Geotechnical Engineer shall:

1. Address potential for differential settlement between structures and interconnected pipelines, including mitigation measures.

2. Provide a corrosivity analysis for soils throughout the invert depth of any proposed pipelines or deep vaults.

3. Address foundation loading conditions including those of storage tanks, pumping equipment, valves and pipes for single level or multiple-level structures as necessary.

4. Address considerations for electrical conduits or pipeline crossings including protection, separation and backfill recommendations and address minimum pipe cover as necessary where pipelines or conduits are anticipated to be relatively shallow.

5. Address any potential impacts to existing structures from adjacent new improvements including pipelines, pumping stations or lift stations and associated structures.

K. Subsurface Vaults: Geotechnical services related specifically to design of deep subsurface vaults shall be provided by a Geotechnical Engineer experienced in geotechnical evaluation of subsurface vaults. The Geotechnical Engineer shall be responsible for determining the specific foundation design criteria and site conditions as described in these guidelines. In addition the Geotechnical Engineer shall:

1. Provide excavation considerations down to the invert elevation of proposed vaults, including an evaluation of possible cemented soil, bedrock, cobbles or boulders that may be encountered during excavation or at the proposed subgrade elevation.

2. Provide shoring or slope considerations for deep excavations and anticipated minimum setback distances from any existing structures. Provide design values for soil anchors when necessary.

3. Address potential for differential settlement between near-surface structures and interconnected deep vaults or wells, including mitigation measures.

4. Address lateral earth pressures throughout the anticipated depth of deep vaults, including pressures from adjacent structures or anticipated traffic.

5. Address groundwater considerations and any uplift pressures that could occur when vaults with invert elevations below the static groundwater elevation are to be drained.

6. Address compaction considerations for soil adjacent to subsurface walls to mitigate the potential for wall failure from heavy equipment or compaction loads.

7. Provide static and seismically induced lateral earth pressures for anticipated backfill conditions behind subsurface walls.

8. Provide net allowable bearing capacity values for soils supporting deep subsurface vaults including a suitable factor of safety.

CHAPTER 4 STRUCTURAL AND SEISMIC DESIGN

4.01 General

A. The purpose of this chapter is to set forth structural and seismic design guidelines for both new facilities as well as for retrofitting existing facilities. The intent is to establish minimum guidelines as well as reference currently adopted building codes and industry standards. This is intended to serve as an introduction to structural design requirements and should not be construed as an all-inclusive list.

B. The Engineer is responsible for the final design and contents of this chapter and shall not absolve the Engineer of the responsibility to design in accordance with all federal, state, and local requirements.

C. Applicability: This chapter shall apply to the design, repair and rehabilitation of large utility facilities, which include the following:

1. Buildings: All occupied or unoccupied buildings including pump stations, pressure reducing stations, administration buildings, electrical buildings, and warehouses.

2. Water Retaining Structures: All reservoirs, clearwells, wetwells, water and wastewater treatment structures, and splitter structures.

3. Buried Structures: All valve vaults, meter vaults, water and wastewater treatment structures, and pressure reducing stations.

4. Buried Pipelines: All water and wastewater transmission or collection pipelines.

D. Reference Standards and Codes - The currently adopted reference standards and code shall be used in the design:

1. Aluminum Association:
   a) Aluminum Design Manual: Specifications and Guidelines for Aluminum Structures

2. American Concrete Institute (ACI).
   a) Code Requirements for Environmental Engineering Concrete Structures and Commentary (350/350R)
   b) Building Code Requirements for Reinforced Concrete and Commentary (ACI 318/318R)
   c) Building Code Requirements for Masonry Structures (530)

3. American Institute of Steel Construction (AISC) Steel Construction Manual.

4. American Water Works Association (AWWA):
   a) Wire- and Strand-Wound, Circular, Prestressed Concrete Water Tanks (D110)
   b) Welded Steel Tanks for Water Storage (D100)
   c) Factory-Coated Bolted Steel Tanks for Water Storage (D103)

5. International Code Council (ICC):
   a) International Building Code (IBC)

6. Occupational Safety and Health Act.

7. Transmission Pipelines - Seismic Guidelines for Water Pipelines, American Lifelines Alliance.

4.02 Site Criteria

A. Seismologic and/or Geologic Studies: The Engineer shall determine site criteria based on recent or site specific seismologic or geologic studies. These studies shall consider the following:

1. Geologic features that impact proposed facilities.

2. Deterministic estimates of ground motions for an earthquake.

3. Occupancy Categories and Importance Factors per IBC for proposed structures.

B. Geotechnical Studies: The Engineer shall complete a geotechnical study, which identifies all seismic loads for analysis and design of a structure and in accordance with the requirements of Chapter 3. The geotechnical report shall also address the following:

1. Landslide damage for projects beneath or on top off steep slopes or cuts.

2. Differential settlement based on site-specific data.

3. Dewatering during construction.

4. Mitigation of Buoyant forces due to groundwater.

4.03 Seismic Design Criteria

A. Each structure shall be designed in accordance with the appropriate edition of the IBC and per site-specific seismic design recommendations as given in the project's geotechnical report(s). For minor isolated structures where a site-specific study may not be performed, the appropriate provisions of the IBC shall be used to determine seismic forces.

B. Seismic Forces: Seismic forces resulting from dead loads shall be determined using the appropriate ground acceleration and in accordance with IBC required importance factor criteria.

C. Water Retention Structures: The Engineer shall design all water retention structures as follows:

1. Non-prestressed basins per ACI 350.
2. Circular wire-wound or prestressed basins per AWWA D110.
3. Steel water tanks per AWWA D100.
4. Internal components and equipment shall be designed per currently adopted codes and current industry standards.

D. Equipment: The Engineer is responsible for evaluating seismic loads for all equipment and accessories. Equipment that must be evaluated for seismic loads includes but is not limited to the following:

1. Clarifier mechanisms.
2. Impeller mixers.
3. Vertical pumps.
4. Horizontal pumps.
5. Air Compressors.
6. Centrifugal blowers.
7. Motor Control Centers (MCCs).
8. Generators.

E. Anchors: The Engineer shall provide anchors suitable for the anticipated seismic conditions using design forces for anchorage and bracing per IBC requirements. Anchors may include the following:

1. Cast-In-Place anchors such as headed studs. J-bolts shall not be used.

2. Epoxy and expansion anchors may be used when cast-in-place anchors are not practical. Epoxy and expansion anchors should not be used for vibrating equipment. Anchors shall meet the current seismic provisions for cracked concrete.

3. Welded anchors shall be designed and detailed with embedded plates with bolted connections to avoid field welding.

4.04 Structural Loads

A. The design criteria presented herein are minimum guidelines. The Engineer is responsible for determining whether or not the minimum guidelines are appropriate for the project.

B. Dead Loads are defined as the load of all material and equipment, which is constant throughout the life of a structure. The following unit weights shall be used at a minimum:

Material	Minimum Dead Load (pcf)
Aluminum	169
Concrete	150
Concrete Masonry	135
Steel	490

C. Live Loads are defined as the load that a structure is designed to oppose, which includes the constant or 'dead' load in addition to any temporary or moving load. The following live loads shall be used at a minimum:

Description	Minimum Live Load
Roof Load	More stringent of IBC or local code*
Stairs, Platforms, Walkways	100 psf or per local code
Electrical Equipment Areas	150 psf
Equipment Areas	250 psf**

*Roof Load to include maximum loads due to lifting eyebolts and roof equipment.
**To be verified by equipment information.

D. Wind Loads shall be in accordance with currently adopted code.

E. Lateral Loads shall be designed using soil conditions as defined in the geotechnical report. Hydrostatic pressure shall be included for areas subjected to saturated soil and/or groundwater.

F. Seismic Loads shall be considered in accordance with this chapter.

G. Vibration Loads shall be included where applicable and shall be included based on the equipment manufacturer.

H. Impact Loads shall be considered where applicable.

I. Miscellaneous Loads shall be determined by the Engineer and include but are not limited to the following:

1. Loads due to thermal expansion and contraction.

2. Thrust in pipelines.

3. Vehicular loads on or near structures.

4.05 Structural Design Requirements

A. Reinforced Concrete Structures: The Engineer shall design all reinforced concrete structures per the requirements of ACI 318 and ACI 350. The following criteria also apply:

1. Minimum Specified Concrete Compressive Strength: 28-day compressive strength of 4,000 psi unless specifically noted otherwise.

2. Minimum Reinforcing Steel Strength: Yield strength of 60,000 psi per ASTM A615.

3. Where the concrete is exposed to sulfate containing soils, the Minimum Specified Concrete Compressive Strength shall be increased as required by ACI 318.

4. Joints: Expansion and construction joints shall be provided to allow flexibility and to adequately tolerate differential movements and shrinkage stress. Joints shall be in accordance with ACI 350 to mitigate cracking. The following types of joints should be considered:
   a) Expansion joints
   b) Contraction joints
   c) Construction joints

B. Steel Structures: The Engineer shall design all steel structures in accordance with AISC. The following criteria also apply:

1. Structural steel W and WT shapes per ASTM A992.

2. Structural steel shapes other than W and WTs, plates, and bars per ASTM A36.

3. Structural steel pipe per ASTM A501 or ASTM A53, Type E, Grade B.

4. Hollow Structural Sections per ASTM A500, Grade B.

5. Structural stainless steel shapes, plates and bars per ASTM A167 and ASTM 276.

6. Composite steel deck per AISC, Manual of Steel Construction, and AISI Specifications.

7. Crane supports shall be designed for the more stringent of maximum deflection of 1/500 times the span or the crane manufacturer's requirements.

C. Structural Aluminum: The Engineer shall adhere to the following in design of structural aluminum:

1. Structural aluminum shapes, plates and bars per ASTM 6061-T6 alloy and ASTM B209, B221 and B308.

D. Masonry Structures: The Engineer shall design all masonry structures in accordance with ACI 530. Facilities constructed of reinforced masonry block shall be designed based upon the working stress analysis method. The following criteria also apply:

1. Materials: Hollow Concrete Masonry Units made from normal weight aggregates (ASTM C33).

2. Nominal Block Size: 8-inch x 16-inch unless specifically noted otherwise.

3. Minimum Concrete Block Strength: 1,500 psi per ASTM C90, Grade N, Type II.

4. Mortar per ASTM C270, Type M or S.

5. Minimum Reinforcing Steel Strength: Yield strength of 60,000 psi per ASTM A615, Grade 60.

6. Steel Reinforcing Wire: No. 9 gage steel wire, ASTM A 951, hot-dip galvanized in accordance with ASTM A 153, Class B-2.

7. Grout per ASTM C476 or requirements IBC.

8. Joints: Provide expansion joints and control joints in accordance with ACI 530.

E. Concrete Foundations: The Engineer shall design concrete foundations in accordance with the recommendations of the geotechnical report. The following items apply to concrete foundations:

1. Mat Foundations shall be designed as a slab on an elastic foundation with construction, expansion, and contraction joints per ACI 350.

2. Spread Footings shall be cast monolithically with floor slab.

3. All foundations shall be provided with construction, expansion, and contraction joints per ACI 350 and with PVC waterstop.

F. Equipment Footings: The Engineer shall design equipment footings for the maximum load under operating or test conditions. The following items also apply to equipment footings:

1. The worse case effects from wind and seismic loads shall be considered.

2. The factor of safety against wind and seismic overturning and sliding shall not be less than 1.5.

3. Equipment piping shall not be used as a means to resist wind or seismic loading.

4. Consider movement and shear on equipment support caused by removing components.

G. Rotating and Reciprocating Equipment: The Engineer shall design structures considering forces resulting from vibration and torque from equipment in accordance with ACI 350 and per the equipment manufacturer's recommendations. The following items also apply:

1. Support shall be isolated from the surrounding slab to minimize the effect of vibration on adjacent structures whenever possible.

2. Equipment shall be anchored to the support with Type 316 stainless steel anchor bolts designed for vibration, impact, torque, seismic and wind loading. Bolts shall have a minimum diameter of 3/4 inches.

H. Concrete Walls: The Engineer shall design concrete walls considering the following:

1. Cantilever walls with active soil pressure.

2. Walls restrained at the top with at-rest soil pressures.

3. Cantilevered Walls shall consider restraint at end walls or cross walls.

4. Construction joint spacing shall not exceed 30 feet.

5. Minimum reinforced concrete wall thickness shall be 8 inches.

6. Minimum thickness for reinforced concrete walls greater than or equal to 10 feet high and retaining water shall be 12 inches.

7. Vertical wall construction joints shall align with the floor joints. Construction joints shall utilize (as a minimum) 3/8-inch by 6-inch PVC ribbed waterstop and 3/4-inch triangular sealant grooves. Expansion joints shall utilize (as a minimum) 3/8-inch by 9-inch PVC ribbed waterstop and 3/4-inch triangular sealant grooves.

8. Two techniques are recommended to reduce the tendency for vertical wall cracking that results from footing restraint:
   a) The wall shall be keyed into a joint at the tip of the wall footing. In order to minimize water demand from the footing on the fresh wall concrete, the keyway in the footing should be kept wet until the wall concrete is placed.
   b) Additional horizontal reinforcing shall be placed in the bottom 3 feet of the wall.

I. Concrete Floor Slab: The Engineer shall design concrete floor slabs considering the following:

1. Facility floor slabs shall be sloped to provide adequate drainage to the floor drain or sump.

2. Minimum thickness: 6 inches.

3. Joints: Control joints, construction joints shall be provided in the slab structure per ACI 350 with roof joints aligned with wall joints.

4. Construction joint spacing shall not exceed 30 feet.

CHAPTER 5 CORROSION CONTROL

5.01 Corrosion Analysis and Evaluation

A. General: The purpose of this chapter is to provide general guidelines for design of corrosion control measures for new facilities. Corrosion control measures shall include materials selection, protective coatings, protective linings, and/or cathodic protection. These guidelines must be considered in conjunction with current industry standards. Corrosion control and prevention must be evaluated for all projects by a registered professional corrosion engineer or a NACE certified corrosion specialist.

B. The Engineer shall address soil corrosivity as part of the geotechnical investigation (See Chapter 3).

C. The need for and type of corrosion control measures shall be based on field investigations and laboratory analyses that assess the corrosion potential of the environment on the proposed facilities.

D. Soil samples for laboratory testing and analyses shall be collected at the proposed locations and depths of all buried concrete structures and along proposed pipeline alignments.

E. The Engineer shall include corrosion testing and laboratory analyses of soil samples in the design of projects. The required corrosion testing and laboratory analysis of soil samples is described in Chapter 3.

5.02 Corrosion Analysis Results, Conclusions and Recommendations

A. General: Corrosion control recommendations shall address the following:

1. Selection of corrosion-resistant materials
2. Protecting any materials susceptible to corrosion with protective linings and/or coatings
3. Locations for cathodic protection system (if applicable)
4. Quantitative assessment of corrosivity of soil and service for proposed materials.

B. Interpretation of Results: Results of field investigations shall be evaluated by a registered professional corrosion engineer or a NACE certified corrosion specialist to determine the needs for cathodic protection. The following shall be taken into consideration:

1. The evaluation shall include consideration of the information in the "Protective Coatings and Linings" section.

2. The practices and recommendations of accepted standards and references shall be used during the course of the work.

C. Conclusions and Recommendations: The evaluation of corrosion protection needs must present recommendations for corrosion protection of the facility under design according to the following guidelines:

1. In general, corrosion protection should be seriously considered for buried or submerged metallic structures if any of the following conditions exist:
   a) Soil resistivity is 12,000 ohm-cm or less, or when a wide range of soil resistivity exists regardless of the absolute values
   b) Soil with high chloride or sulfate concentrations
   c) Waters with high chloride concentrations, high TDS, or high dissolved oxygen concentration
   d) Areas subject to stray electrical currents
   e) Support facility piping for natural gas, fuel, compressed air, chemicals, and steel storage tanks.

2. The evaluation will reach one of two possible conclusions. The first possible conclusion is that at the time the study is conducted, cathodic protection is necessary. This approach will result in the installation of cathodic protection systems concurrent with construction of the pipeline. The cathodic protection system would be designed for a minimum service life of 30 years, after which it would require replacement for continued service.

3. A major consideration for the cathodic protection alternative is that stray current from the cathodic protection system must be controlled to prevent damage to other facilities. The cost savings resulting from leak prevention on the protected pipeline could be surpassed by the costs of damage to other facilities.

4. The second possible conclusion of the evaluation is that cathodic protection is not required at the time of construction. All pipelines would then be provided with the test stations and joint bonding system necessary to allow corrosion monitoring of the pipeline. Corrosion

monitoring results are used to determine when, or if, cathodic protection is required.

5.03 Induced Voltage and Stray Current Mitigation

A. General: Stray current testing is required for proposed buried piping that crosses or parallels overhead high voltage electrical transmission lines and/or buried natural gas pipelines or oil pipelines protected with impressed current cathodic protection. Other potential sources of stray DC current include industrial sources such as metal processors and welding shops.

B. The Engineer shall determine potential effects on the proposed buried piping as well as safety issues to operations and maintenance personnel when proposed facilities cross or are located near overhead high voltage electrical transmission lines and/or cathodically protected natural gas and petroleum pipelines.

C. The Engineer shall design corrosion control measures to mitigate stray current effects on proposed facilities from existing facilities.

D. Acceptable methods of mitigating stray currents and induced voltage for buried pipelines include but are not limited to:

1. Insulating flanges, grounding cells, and test stations
2. Sacrificial anode shield systems and associated test stations
3. Personnel safety grounding mats.

5.04 Materials Selection

A. General: The Engineer shall evaluate materials based on the project conditions and select materials resistant to corrosion or provide corrosion mitigation for materials subject to corrosion.

The Engineer shall confirm that all materials and coatings that are in contact with potable water are certified for potable water per NSF Standard 61.

B. Materials for Buried and Submerged Piping and Accessories: Acceptable materials for buried piping and accessories include:

1. Steel, lined and coated in accordance with this chapter
2. Ductile iron, lined and coated in accordance with this chapter
3. PVC, to the extent allowed by COS, and except when in contact with organic compounds that may result in degradation

4. Concrete

5. Fiberglass reinforced mortar, except when in contact with organic compounds that may result in degradation

6. High-density polyethylene, except when in contact with organic compounds that may result in degradation

7. Corrosion-resistant cast iron

8. Type 316 stainless steel hardware.

C. Materials for Exposed Piping and Accessories:

1. Steel, lined and coated with amine-cured epoxy in accordance with this chapter

2. Ductile iron, lined and coated in accordance with this chapter

3. PVC, except when in contact with organic compounds that may result in degradation. PVC shall be uncoated and protected with an aluminum shield for outdoor use.

4. Copper coated with equipment epoxy in accordance with this chapter

5. Black steel

6. Galvanized steel hardware for exposed dry and non-wastewater service

7. Type 316 stainless steel hardware for damp and wastewater service.

D. Concrete: All concrete subject to corrosive environments shall be provided with corrosion protection. This applies to pipe and structures, which include manholes, vaults, and wet wells. The Engineer shall select adequate corrosion mitigation based on the following:

1. Protective coatings for buried and submerged service include polyurethane, acrylic, and coal-tar epoxy in accordance with this chapter.

2. Protective coatings for wastewater service include polyurethane, coal-tar epoxy, and amine-cured epoxy in accordance with this chapter

3. Utilizing Type V ASTM C150 portland cement

4. The use of PVC liner for protecting concrete from corrosion is not acceptable.

E. Steel: All steel structures subject to corrosive environments shall be provided with corrosion protection. This applies to pipe, reservoirs, vaults, and other structures. The Engineer shall select adequate corrosion mitigation based on the following:

1. Protective coatings for buried and submerged water service include NSF Standard 61 certified for potable water, polyurethane, amine-cured epoxy, and coal-tar epoxy in accordance with this chapter.

2. Protective coatings for wastewater service include coal-tar epoxy and amine-cured epoxy in accordance with this chapter.

3. Cathodic protection in accordance with this chapter:
   a) Steel vaults shall utilize a passive cathodic protection system.
   b) Steel reservoirs shall utilize impressed current cathodic protection system.

F. Aluminum: Aluminum is acceptable for exposed service for applications such as ladders, grating, guardrail, handrail, and kickplate. Aluminum shall not be used for buried or submerged service or in direct contact with concrete.

G. Copper and Brass: Copper and brass are acceptable for exposed service such as water piping and finish hardware. Piping shall be coated in accordance with this chapter. Copper and brass shall not be used for corrosive chemical service (acids, hypochlorite, ferric chloride, etc.), buried service, submerged service, or wastewater service unless approved in writing by COS.

5.05 Protective Linings and Coatings

A. General: Corrosion control methods of materials subject to corrosion may include a combination of protective coatings and/or other measures as determined by the Engineer, which include:

1. Protecting materials susceptible to corrosion with protective linings and/or coatings

2. Providing passive cathodic protection system.

B. Surface Preparation: Adherence to the following referenced “surface preparation of ferrous surfaces” with existing coatings standards of the Society for Protective Coatings (SSPC) is a requirement of these standards.

1. <u>Shop Primed Metal Surfaces with minimal disruption</u>: Solvent Cleaning (SSPC-SP1): Removal of oil, grease, soil, drawing and cutting compounds, and other soluble contaminants from steel surfaces by

cleaning with solvent, vapor degreasing, emulsion or alkaline cleaners or steam.

2. Shop Primed Metal Surfaces with significant disruption, and Non-Metallic Surfaces: Brush-Off Blast Cleaning (SSPC-SP7/NACE4): Removal of all visible oil, grease, dirt, dust, loose mill scale, loose rust, and loose coating, all of which shall be considered tightly adherent if they cannot be removed by lifting with a dull putty knife.

3. Unprimed Metal Surfaces: White Metal Blast Cleaning (SSPC-SP5/NACE1): Removal of all visible oil, grease, soil, dust, dirt, mill scale, rust, coating, oxides, corrosion products, and other foreign matter by blast cleaning.

C. Protective Linings and Coatings:

1. Potable Water Considerations: All linings and coatings in contact with potable water shall be certified per NSF Standard 61.

2. Aliphatic Polyurethane, Concrete: Two-component aliphatic polyurethane coating material with following properties:
   a) Solids content of 65 percent by volume
   b) Filler sealer comprised of two-component epoxy
   c) Prime filler sealer coat thickness = 2 mils DFT
   d) Intermediate coat thickness = 5 mils DFT
   e) Finish coat (2 coats minimum) thickness = 2 mils DFT.

3. Acrylic, Concrete: Single component industrial grade, high molecular weight with following properties:
   a) Solids content of 35 percent by volume
   b) Filler sealer comprised of two-component epoxy with solids of 64 percent by volume
   c) A 100 percent solids epoxy surface shall be used to fill holes and patch the concrete surface after abrasive blasting
   d) Prime filler sealer coat shall be applied with squeegee to achieve a smooth, void-free surface
   e) Finish coat (2 or more) thickness = 5 mils DFT

4. Amine Cured Epoxy: High build, amine cured, epoxy resin with a solids content of 80 percent by volume suitable for long-term immersion service in potable or municipal wastewater with the following properties:
   a) NSF Standard 61 certification for potable water service
   b) Prime coat and finish coat thickness = 18 mils DFT
   c) Coating thickness for valves and non-submerged equipment = 14 mils DFT.

5. Polyamide Cured Epoxy: High build, polyamide epoxy resin shall have a solids content of at least 56 percent by volume suitable for long-term immersion in potable water and municipal wastewater with the following properties:
   a) NSF Standard 61 certification for potable water service
   b) Prime and finish coat (3 coats or more) thickness = 14 mils DFT
   c) Coating thickness for valves and non-submerged equipment = 14 mils DFT.

6. Cold-Applied Tape, AWWA C209: Prefabricated tape shall be Type II. System shall include the following:
   a) Primer layer
   b) Inner layer with thickness = 35 mils
   c) Outer layer with thickness = 35 mils.

7. Coal Tar Epoxy, AWWA C203: High build, two-component amine or polyamide cured coal tar epoxy with solids content of 75 percent by volume suitable for immersion in wastewater and for coating buried surfaces with the following properties:
   a) Conforms to SSPC Paint 16 - Coal Tar Epoxy-Polyamide Black (or Dark Red) Paint
   b) Prime coat thickness = 2 mils DFT
   c) Finish coat (2 or more) thickness = 18 mils DFT
   d) Total system DFT = 18-23 mils DFT if shop primed (16 - 20 mils DFT if not shop primed).

8. Equipment Epoxy: Two-component, rust inhibitive polyamide cured epoxy coating material with solids content of 66 percent by volume resistant to moisture, splash, and spillage of lubricating oils and washdown. The epoxy shall include the following:
   a) Prime coat thickness = 4 to 6 mils DFT
   b) Finish coat (2 or more coats) thickness = 4 to 6 mils DFT
   c) Total system DFT = 10 mils.

9. Fusion Bonded Epoxy: The coating material shall be 100 percent solids powder epoxy applied in accordance with ANSI/AWWA C213 - Fusion Bonded Epoxy Coating for the Interior and exterior of steel water pipelines. The system shall include the following:
   a) Liquid Epoxy: As recommended by powder epoxy manufacturer permitted for field repairs shall be 100 percent solids and applied with not less than 3 coats for DFT of 14 - 16 mils
   b) Total system DFT = 14 to 16 mils
   c) Valve coating DFT = 14 to 16 mils.

10. Cement Mortar Lining and Coating, AWWA C205: A 1-inch minimum thickness mortar coating reinforced with welded wire fabric shall be provided. The cement mortar shall:
    a) Contain less than one part Type V cement to three parts sand
    b) Be cured by a curing compound meeting ASTM C 309
    c) Be applied per AWWA C602 for in-situ lining of pipelines.

11. Polyethylene Tape and Cement Mortar Coating: A flexible pipe dielectric coating system (polyethylene tape) and cement mortar protective overcoat (rock shield) shall be provided. Polyethylene tape shall be a 3-layer system with:
    a) A total thickness of 80 mils
    b) Conforms to ANSI/AWWA C214
    c) Rock shield with reinforcement conforms to ANSI/AWWA C205
    d) Cement mortar shall be Type V.

12. Polyurethane Linings and Coatings for Steel Pipe, AWWA C222: A flexible coating system with the following:
    a) A total thickness of not less than 30 mils.

13. Polyurethane Coating for Ductile Iron Pipe: The exterior surface of ductile iron pipe and fittings shall be protected with a minimum 25-mil thickness of polyurethane coating. Polyurethane coatings shall be Corrocote 11 TX-15 by Madison Chemical, Tnemec Series 406 Elasto-Shield, or equal. Coating shall conform to National Association of Pipe Fabricators (NAPF) 500-03.

5.06 Buried Piping

A. Steel Pipe:

1. The Engineer shall provide one or more of the accepted methods for controlling corrosion of buried steel pipe which can be used individually or in combination:
    a) Protective linings and coatings such as polyethylene tape, cement-mortar, fusion-bonded epoxy, and polyurethane in accordance with this chapter.
    b) Cathodic protection in accordance with this chapter. All piping shall be tied with test lead stations reference cell.
    c) Inhibitive environment installed around the pipeline.

B. Ductile Iron Pipe:

1. The Engineer shall provide one or more of the two common methods for controlling corrosion of ductile iron pipe :
   a) Polyethylene encasement utilizing double layers of 8-mil polyethylene tubing unless otherwise specified in the required Corrosion Study. The polyethylene shall be tightly wrapped with tape every two feet minimum.
   b) Polyurethane lining and coating in accordance with this chapter.
   c) Cathodic protection in accordance with this chapter. All piping shall be provided with test station and reference cell.

5.07 Cathodic Protection

A. General: The need for cathodic protection systems shall be determined on a case-by-case basis by the Engineer, concurrence by the COS, with special consideration given to service, soil conditions, and stray currents. The two methods of cathodic protection commonly used are described in this section.

B. Passive System: Consists of a galvanic cell created using a sacrificial-anode material such as magnesium or zinc. The system is designed so that the structure or pipeline being protected becomes the cathode and a sacrificial metal becomes the anode. This system is generally used in lightly or moderately corrosive soils where it is desirable to apply small amounts of current at a number of locations.

C. Impressed Current System: Operates much like the galvanic system utilizing an AC-powered rectifier to drive a direct current through the system. Impressed current cathodic protection systems are generally used in heavily corrosive soils.

D. Bonding of Pipeline Joints: Bonding of joints is required where cathodic protection is provided by the Engineer or is anticipated in the future as determined by the COS. All joints shall be bonded at the time of installation and test stations shall be provided along the pipeline.

E. Service Life: The Engineer shall design the cathodic protection system such that replaceable components such as anodes have a minimum service life of 30 years when coupled with routine monitoring and maintenance.

CHAPTER 6 CHEMICAL FACILITIES

6.01 General

A. This chapter delineates standards and guidelines for design of chemical facilities, which includes facilities that transfer, store, and pump chemicals used for water or wastewater treatment. Requirements for associated equipment and support systems are also addressed.

B. General design requirements are as follows:

1. Master plan site and modular design with reserve space to allow additional modules for expansion in accordance with Chapter 1.

2. Chemical storage facilities and metering shall be provided in an enclosed building or within a shade structure as determined by the Engineer and based on the type of chemical service.

3. Facilities shall be designed to meet or exceed safety requirements as defined in this chapter.

4. Facilities shall be designed to meet the requirements of the initial installation. Facility design shall also demonstrate the ability to accommodate future expansions required to meet the master planned intent of the facility.

5. The design of all chemical facilities shall be completed by a Professional Engineer registered in the State of Arizona.

C. These standards and guidelines are not intended to address all issues associated with design of chemical facilities and do not relieve the Engineer of responsibility to design a functional facility that follows industry standards and complies with regulations.

D. The types of chemicals used for water and wastewater treatment that this chapter would apply to include but are not limited to the following:

1. Iron salts such as ferrous sulfate and ferric chloride

2. Aluminum salts such as aluminum sulfate and polyaluminum chloride

3. Flocculants such as cationic and anionic polymers

4. Disinfectants such as chlorine gas, sodium hypochlorite, calcium hypochlorite, hydrogen peroxide, and ozone

5. Dechlorination chemicals such as sodium bisulfite and sulfur dioxide
6. Acids, defined as pH less than 7, which includes citric acid, hydrochloric acid, and sulfuric acid
7. Bases, defined as pH greater than 7, which includes sodium hydroxide and quicklime
8. Other chemicals used for pH adjustment such as carbon dioxide
9. Softening chemicals such as lime, sodium hydroxide, and soda ash
10. Odor control chemicals such as granular activated carbon and potassium permanganate
11. Algae control chemical such as copper sulfate.

6.02 Regulatory Considerations

A. General: Chemical facilities shall be designed to comply with all federal, state, and local regulations as well as industry standards.

B. Federal Regulations:

1. CFR
2. EPA
3. IBC
4. IFC
5. IMC
6. IPC
7. NFPA
8. OSHA.

C. Industry Standards

1. ANSI
2. ASME
3. ASTM
4. The Chlorine Institute, Inc.

5. NACE.

D. State and Local Standards:

1. ADEQ
2. COS Fire Code Amendments
3. MCESD
4. SUDC Municipal Code.

6.03 Concept Design Review (CDR) Phase

A. General: The CDR of the project shall be summarized and presented in a CDR report. The report will be submitted to the COS for review and acceptance. The CDR is the basis for the subsequent design process and must include the following at a minimum:

1. Executive Summary
2. Table of Contents
3. Project Background
4. Description of property ownership, right-of-way, and easement information (per Chapter 1)
5. Draft Traffic Study
6. Draft Drainage Study
7. Draft Geotechnical Investigation Report
8. Draft Environmental Investigation Report
9. Draft Corrosion Control/Cathodic Protection Report
10. Draft Electrical Coordination Study
11. Topographic mapping information and survey summary
12. Building design parameters
13. Description of proposed chemical(s) with overview of factors affecting stability, transportation, and handling as well as potential safety issues

14. Description of federal, state, and local spill reporting requirements for proposed chemicals and include the following:

    a) Whether or not proposed chemicals are classified as an extremely hazardous substance by AERC or 40 CFR

    b) Provide the threshold planning quantity for a extremely hazardous substances if applicable

    c) Summarize reporting requirements including Tier II for any extremely hazardous substances. Where possible, avoid designs that require Tier II reporting.

15. Description of metering pump selection to include at a minimum:
    a) Design chemical dosage at initial and buildout conditions
    b) Technical selection criteria including operational scenarios of flow and head with the selected pumps
    c) Cost considerations including capital costs and operating and maintenance costs
    d) Description of anticipated operational set points
    e) Summary of constructability issues
    f) Summary of maintenance issues
    g) Quantity of duty and standby pumps (minimum of 3 total)
    h) Pump type and configuration, including the power requirements and proposed materials
    i) Table that summarizes the pump design criteria.

16. Description of chemical storage facilities to include:
    a) Quantity and size of proposed tanks or totes
    b) Age of chemicals at maximum and minimum chemical consumption
    c) Proposed tank or tote materials
    d) Proposed type and size of secondary containment
    e) Table that summarizes the pump design criteria.

17. Description of architectural features, if applicable

18. Description of security features in accordance with current COS Security Master Plan

19. Major equipment design criteria

20. Summary of preliminary coordination meeting with Arizona Public Service Company

21. Summary of individual electrical loads with total connected electrical load

22. Preliminary (30 percent) Drawings, which include:
    a) Civil site plan that presents proposed grading and major yard piping
    b) Facility showing major dimensions and proposed locations of mechanical equipment, major piping and electrical equipment
    c) Process and Instrumentation Diagrams (P&IDs) in accordance with Chapter 8
    d) Electrical single-line diagram in accordance with Chapter 7

23. Preliminary outline of technical specifications

24. Provisions for expandability and locations of future:
    a) Mechanical equipment
    b) Electrical equipment
    c) Major piping

25. Summary of Community Development entitlement submittals

26. Summary of major stakeholders and utilities with contact information for each

27. Summary of Quality Level A subsurface utility location data in accordance with ASCE *Standard Guideline 38-02 for the Collection and Depiction of Subsurface Utility Data*

28. Summary of permit requirements and submittals

29. Proposed project schedule with milestones for:
    a) Design completion
    b) Bid date
    c) Construction

30. Preliminary cost estimate

31. Proposed PLC and SCADA that includes discussion on integrating with existing systems

32. Preliminary control descriptions with discussion on proposed automatic and manual modes of operation.

6.04 Final Design Phase

A. General: The Engineer shall provide a Final Design with progress submittals to the COS at 60 percent and 90 percent level of completion in accordance with Chapter 1, which builds upon work completed during the CDR. The Final Design shall include:

1. Final design drawings
2. Final specifications
3. Details of security features in accordance with the current COS Security Master Plan
4. Final cost estimate
5. Final drawings and specifications shall meet the general requirements presented in Chapter 1
6. Final versions of all studies and reports submitted with the CDR Report

6.05 Site Considerations

A. General: Chemical facilities should be located in close proximity to the point(s) of application in order to minimize piping distance and lag time.

B. Vehicle Access: Provide the following to accommodate the type of vehicles anticipated for the facility, which includes fire trucks and chemical delivery trucks:

1. Provide asphalt cement paving for roads and parking areas with concrete curb along perimeter of pavement.
2. Road width shall be not less than 25 feet.
3. Wheel base of not less than 50 feet.
4. Vehicle access and turning radius of at least 52 feet.
5. Access gates and driveway into the facility located in a manner that will not obstruct traffic for vehicles entering and exiting.
6. Provide bollards to protect structures and electrical equipment in areas where truck traffic is anticipated.

C. Site Drainage: Provide drainage facilities in accordance with Chapter 2 that provide flow path and containment of potential chemical spills and floods within the property.

D. Buried chemical piping systems shall be provided in accordance with the following:

1. Located at least 36 inches below grade as measured from top of pipe.

2. Installed with yellow warning tape at least 12 inches above the top of pipe to indicate the type of chemical service and pipe material.

3. Provide lean concrete cap to protect individual pipes.

4. Provide pre-cast or cast-in-place concrete trench with access covers for routing multiple chemical pipes.

6.06 Safety

A. General: The Engineer shall design all facilities with proper signage and safety features. It is the Engineer's responsibility to verify that all federal, state, and local safety requirements are met.

B. Learning Facility Consideration: The Engineer is required to address all federal, state, and local requirements for learning facilities, which include the following:

1. Chemical storage tank size

2. Chemical delivery schedule and truck routes

3. Impact zones for potential chemical spills.

C. Emergency Eyewash/Showers: Chemical facilities shall be equipped with emergency eyewash/showers located in accordance with ANSI and OSHA and as illustrated in Figure 6.1. Features shall include the following:

1. Minimize or eliminate any exposed piping to minimize potential for scalding temperatures.

2. Locate inlet isolation ball valve at bottom.

3. Models that constantly discharge are not allowed.

4. Integral anti-scald feature to prevent temperatures from exceeding 80 degrees Fahrenheit.

5. Insulation and heat-tracing is required for freeze protection where freezing temperatures are anticipated.

6. Flow switch that indicates alarm to plant SCADA.

D. Fire Protection: Provide fire protection per the codes and regulations referenced herein, which include the following:

1. Fire Hydrants: If a fire sprinkler system is not required, provide fire hydrants with buried piping lateral and isolation gate valve suitable for the required fireflow and residual pressure required.

2. Fire Sprinkler System: Where fire sprinklers are required, provide piping, supports, and sprinklers that are compatible with the chemical service.

3. Fire Alarm System: Fire alarm systems are required for all chemical buildings with smoke detectors as well as visible and audible indication of alarms.

4. Exterior Disconnect: A means of disconnecting utility power shall be provided on the exterior, adjacent to an exit door.

5. Fuel Storage: Provide the following for aboveground fuel storage facilities in accordance with the fire department requirements:
   a) Fire extinguishers in accessible locations per City of Surprise Fire Department requirements
   b) Vehicle protection bollards
   c) Flash distance key items
   d) All other fire protection devices.

E. Signs that indicate the following:

1. Emergency exits

2. Non-potable water at any non-potable washdown water spigot and hose bib locations

3. Storage tank shutoff valves

4. Chemical hazard information for all chemical storage tanks.

6.07 Chemical Compatibility

A. General: The Engineer is responsible to design facilities that do not allow mixing of incompatible chemicals. This includes but is not limited to commingling of incompatible liquids, gasses, and vapors. Facility designs where incompatible chemicals are combined into one facility shall:

1. Isolate: Chemical transfer areas, chemical storage areas, chemical containment areas, chemical tank vents and vapors, chemical piping, and metering pumps

2. Provide signage to clearly identify the respective chemical with independent lock or independent locking cap.

6.08 Chemical Transfer

A. General: The Engineer shall design facilities such that chemical transfer minimizes potential for spills, is self-draining, and does not result in unnecessary risks to operators or environment.

B. Truck Transfer Pad: A reinforced concrete truck transfer pad shall be provided for facilities where chemicals are delivered and transferred via chemical delivery trucks. The following will be provided:

1. Rated for minimum H20 traffic as determined by size of delivery truck required at peak consumption

2. Sufficient slope of at least 2 percent to a chemical drain sump for containing spills. Connecting chemical drain areas to sanitary or storm sewer is not allowed.

C. Chemical Unloading Station: Provide unloading stations for chemical delivery as illustrated in Figure 6.2 for bulk transfer of chemicals as follows:

1. In accordance Chapter 8 requirements

2. Provide digital chemical storage tank level display

3. Include storage tank high level alarm strobe with audible alarm horn

4. High level alarm/strobe reset button.

D. Liquid Chemicals: Facilities used to transfer liquid chemicals shall include the following:

1. Quick disconnect type fill connection located on exterior, except for liquid ferrous or ferric chemicals where a flanged connection with four Type 316 stainless steel bolts is required.

2. Dual basket strainers with manual isolation valves located within the containment area, which remove solids prior to chemical storage, where chemical manufacturing methods or delivery methods may result in contamination.

3. Emergency eyewash/shower combination unit adjacent to fill connection in accordance with this chapter.

4. Washdown water hose bibs and hose rack on interior and exterior adjacent to fill connection and adjacent to basket strainers.

E. Solid Chemicals: Facilities used to transfer solid chemicals shall include the following:

1. Quick disconnect type fill connection located on exterior

2. Dust collection bags, dust collector, or alternative means of dust suppression as approved by the City.

F. Gaseous Chemicals: Facilities used to transfer gaseous chemical cylinders shall be provided with:

1. Monorail hoist with sufficient capacity for largest container size anticipated

2. Automatic shutoff valves for each gas cylinder.

6.09 Chemical Storage Totes

A. General: Provide chemical storage totes or drums for facilities that store bulk volumes less than or equal to 500 gallons. The Engineer shall be responsible to determine the geometry, materials, piping connections, vents, and nozzles as part of the facility design.

B. Quantity and Capacity: A minimum of one storage tote or drum shall be provided with nearby floor space reserved for at least two additional containers of equal size. Quantity and capacity shall consider the items listed in Section 6.08 C as well as availability of totes and sizes from local chemical suppliers.

C. Secondary Containment: Provide secondary containment in accordance with the following:

1. Sized to contain volume of largest tank under future conditions with appropriate volume for:
   a) 24-hour/25-year storm event for outdoor service
   b) Fireflow for indoor service.

2. Spill containment berms or pallets are acceptable means of containment if they meet the following criteria:
   a) Polyethylene construction or other suitable materials that are resistant to degradation for the proposed chemical
   b) Designed to withstand hydrostatic forces for the proposed chemical.

D. Freeze Protection: Maintain ambient temperature above the chemical freezing point.

E. Tote Features:

1. Meets all federal, state, and local requirements for transporting the respective chemical

2. Cone-bottom, cylindrical geometry for dry or viscous liquid chemicals

3. Flat-bottom, cubical geometry for all other liquid chemicals

4. Carbon steel or stainless steel cage rated for chemical weight and equipped with 4-way forklift entry, as needed

5. Minimum 2-inch bottom outlet connection with isolation valve and quick disconnect

6. Flexible couplings at all rigid piping connections.

F. Materials: Provide materials suitable for the intended environment and chemical service, which include

1. HDPE in accordance with 6.08

2. FRP in accordance with 6.08.

6.10 Chemical Storage Tanks

A. General: Provide chemical storage tanks for facilities that store bulk volumes greater than 500 gallons. The Engineer shall be responsible to determine the tank geometry, tank materials, piping connections, vents, and nozzles as part of the facility design.

B. Tank Removal: For enclosed buildings, overhead coiling doors shall be provided with sufficient vertical and horizontal clearance for tank removal.

C. Quantity and Capacity: A minimum of two storage tanks shall be provided for each type of chemical stored for redundancy. Tank quantity and capacity shall consider the following:

1. Current and future conditions

2. Size for 25-ton or 5,000-gallon delivery capacity or verify acceptable delivery size with local chemical supplier.

3. Minimizing chemical age for both current and future conditions

4. Environmental factors that may reduce chemical stability or increase chemical degradation such as temperature and exposure to light.

D. Secondary Containment: Provide secondary containment in accordance with the following:

1. Sized to contain volume of largest tank under future conditions with appropriate volume for:
   a) 24-hour/25-year storm event for outdoor service
   b) Fireflow for indoor service.

2. Containment walls and slab shall be reinforced concrete with Tnemec Series 218 MortarClad, or equal protective concrete coating. Floor area shall be sloped at least 2 percent towards secondary containment sump.

3. Equipped with means of decanting, draining or pumping from secondary containment sump to disposal truck or onsite basin as follows:
   a) Draining: Provide manual isolation valve or gate coupled with thermoplastic drain piping, precast concrete, or cast-in-place concrete drain trench with leak-proof joints
   b) Pumping: Provide 3-foot x 3-foot x 2-foot deep drain sump and manually-operated permanent or portable thermoplastic, electric, or air-operated, self-priming, centrifugal pump with sufficient length of discharge hose and quick disconnect fittings. Automatic operation is not allowed.
   c) Washdown and Rain Water Disposal: Drainage or pumping for discharge to onsite dry well.

E. Freeze Protection: The Engineer shall provide conditioned spaces and/or insulation to maintain ambient temperatures above freezing point or high viscosity of chemical.

F. Tank Mixing: For storage of chemicals that can separate or stratify, provide constant speed, vertical impeller mixers as follows:

1. Shaft, impellers, and all wetted materials comprised of Type 316 stainless steel or material compatible with the chemical

2. Impeller:
   a) Blades bolted to a central hub
   b) Designed and built to operate with dynamic and hydraulic stability with fluctuations in tank liquid level.

3. Constant speed, continuous duty, squirrel cage induction-type motor as follows:
   a) Suitable for 480 VAC, 3 Ph, 60 Hz power
   b) TEFC enclosure for outdoor service
   c) Minimum service factor of 1.15

d) Epoxy coating suitable for service conditions.

4. Bearings:
   a) Minimum B-10 life of 100,000 hours
   b) Enclosed in ASTM Grade 30 cast iron housing
   c) Oil or grease lubricated
   d) Submerged water lubricated bearings are not allowed.

5. Operating sound shall not exceed 85 dBA.

G. Tank Features: The following features shall be provided at a minimum (Figure 6.3):

1. Reinforced concrete tank foundation with seismic anchors

2. Sign that identifies chemical-stored concentration and NFPA 704 diamond with respective classifications

3. Ladder and access platform for tanks with height that exceeds 8 feet

4. Flanged connections (Class 150) for all piping and instrumentation

5. Flexible couplings at all rigid piping connections

6. Thirty-inch diameter manways for tanks with capacity of 1,000 gallons or larger

7. Clear glass level indicator, located on tank exterior, equipped with graduations in gallons, equipped with isolation valves, and protected along length with stainless steel all-thread. Level indicator must be visible from the chemical unloading station.

8. Overflow, sized for twice the maximum fill capacity with gravity drain piping to secondary containment area sump

9. Vent, sized for twice the maximum fill capacity that exhausts above the roof

10. Lifting lugs to be equally spaced, designed to limit flexing when used to lift the tank vertically or horizontally.

11. Gussets on all flanges 12 inches in diameter and smaller, which do not interfere with flange bolts.

12. Gaskets on all flanged connections, suitable for intended chemical service.

H. Tank Materials: Materials and resins shall be compatible with the intended chemical service.

1. High Density Polyethylene (HDPE): HDPE tanks shall:
   a) Be provided with high density, cross-linked polyethylene in accordance with ASTM 1998
   b) Provide tank shell for intended service and specific gravity with shell thickness in accordance with ASTM D 1998, Section 6.1
   c) Not exceed maximum allowable hoop stress per ASTM D 1998 based on test data per ASTM D 2837
   d) Be rotationally molded construction in accordance with ASTM D 1998
   e) Satisfy the following gel test results:
      1) Inner portion of tank wall: Not less than 65 percent
      2) Entire wall thickness: Not less than 80 percent

2. Fiberglass Reinforced Plastic (FRP): FRP tanks shall:
   a) Be designed and fabricated to meet ASME RTP-1 code, stamp not required.
   b) Include resins shall be commercial grade vinyl-ester or other suitable type as recommended by the tank supplier and approved by the Engineer.
   c) Utilize filament wound shell construction in accordance with ASTM D3299 Type I or II.
   d) Incorporate internal and/or external corrosion barriers with appropriate thickness.
   e) Include UV inhibitors suitable for service in direct sunlight.
   f) Incorporate fire retardant.

3. Carbon steel tanks are not acceptable only for chemical storage.

4. Tank materials not addressed in this chapter must be approved to the City during the CDR phase or by the 60 percent Design phase.

6.11 Metering Pumps

A. General: The Engineer is responsible to design chemical metering pumps for sufficient flow and discharge pressure to meter chemicals for current and future conditions. Pump type and materials shall be suitable for the intended service.

B. Hydraulic Design: Provide the following in designing chemical metering pumps:

1. Incorporate the appropriate viscosity and specific gravity for the chemical into hydraulic calculations.

2. Suction piping shall minimize distance from chemical storage source and provide positive suction head at low tank levels required for the metering pump as determined by the pump supplier and the Engineer.

3. Discharge piping shall minimize distance and high points and shall provide protective devices to prevent excessive pressures such as pulsation dampeners, de-gassing, and pressure-relief valves.

4. Flexible tubing for chemical metering pumps shall not be permitted.

C. Pump Features: Provide the following features for each pump (Figure 6.4):

1. Concrete housekeeping pad or fiberglass pedestal

2. Enclosures for metering pumps are not allowed.

3. Stainless steel nameplate with tag number with unique name

4. Graduated calibration column on suction side, with top vented back to storage tank or containment sump, equipped with isolation valve with minimum capacity of 2-L

5. Simplex strainer on suction side of pump

6. Liquid-filled pressure gauge with isolation valve on discharge of each pump.

7. Sunshade for control panels located outdoors

8. Discharge backpressure valve

9. Isolation and drain valves

10. Discharge pressure switch and/or pressure relief valve

11. Pulsation dampener, air-charged on discharge of pump

12. Minimum clearance of 3-ft around all pumps with sufficient clearance for removing motors, stators, gear boxes, and all other maintenance activities.

13. Integral or separate NEMA 4X control panel for each pump with Hand/Off/Automatic (HOA) selector switch and controls as follows:
    a) 'Hand' denotes local operation and speed control at pump or local control panel. Local controls and speed control shall be accessible from outside the control panel.
    b) 'Automatic' denotes automatic control by PLC through remote work station.

D. Peristaltic Pumps shall be hose or tube type designed as follows:

1. Hose and head materials suitable for process fluid parameters that include chemical compatibility, pH, viscosity, and abrasiveness

2. Enclosed head that houses tubing, equipped with clear window for viewing rotation, which is designed to contain leaks.

3. Equipped with leak detector inside head with alarm status

4. Local pump control through integral control panel with LCD screen that displays pump speed, run status, and flow rate.

5. Remote pump control, status, and monitoring via 4-20 mA analog input, 4-20 mA analog output, and discrete alarm output

6. Driven by DC motor with variable speed or AC motor with VFD

7. Motor and pump enclosed in single NEMA 4X enclosure.

8. Manufacturer per preferred vendor list.

E. Diaphragm Pumps shall be equipped with the following:

1. Mechanical-actuated or hydraulically-actuated, self-priming, positive displacement type, capable of dry operation without damaging pump.

2. Diaphragm and other materials in contact with liquid constructed of EPDM, Viton, or PTFE as deemed appropriate by the manufacturer and Engineer to be compatible with the chemical.

3. Remote pump control, status, and monitoring via 4-20 mA analog input for stroke control, 4-20 mA analog output for stroke rate and discrete alarm output.

F. Progressing Cavity Pumps: shall be equipped with the following:

1. Casting comprised of epoxy-coated ASTM A48 cast iron.

2. Stator comprised of Buna N or material suitable for application.

3. Bearings: Grease-lubricated with L10 life of at least 100,000 hours at rated design point per ABMA 9 or 11.

4. Seal: Double-cartridge mechanical seals are required.

5. Direct-drive motor shall be direct-coupled to pump with in-line motor arrangement.

6. Coupling shall be designed for 1.5 times the maximum operating torque.

7. Speed Reduction: Use of gear-reducers and V-belt drives for speed reduction will be limited to a ratio of 5:1.

8. VFDs: Inverter duty motors are required for use with VFDs.

6.12 Piping Design

A. General: The Engineer is responsible to ensure that piping design and materials are suitable for anticipated service conditions with measures to mitigate corrosion and thermal expansion.

B. Flexible pipe materials for use in chemical piping shall be provided in accordance with the following:

1. Fluoropolymer:
   a) Teflon, Kynar, or equivalent fluoropolymer tubing that meets ASTM D3295
   b) Materials, fittings, and connections compatible with type of chemical service as well as pressure and temperature range.

2. Polyethylene:
   a) Polyethylene tubing in accordance with ASTM D3261
   b) Resistant to sunlight and UV where not enclosed in a building
   c) Materials, fittings, and connections compatible with type of chemical service as well as pressure and temperature range
   d) Polyethylene piping is not allowed for oxidants, which include chemicals that contain chlorine.

3. Flexible piping is not allowed for use with pressurized chemical service unless approved in writing by the COS Public Works Director.

C. Rigid pipe materials for use in chemical piping shall be provided in accordance with the following:

1. PVC:
   a) Confirms with ASTM D 1785 and appendices thereto

b) Pipe and Fittings: Extruded from Type I, Grade 1, Class 12454-B material in accordance with ASTM D 1784
c) Pressure Fittings: In accordance with ASTM D 2466 or ASTM D 2467
d) DWV Fittings: In accordance with ASTM D 2665
e) Solvent Cement: In accordance with ASTM D 2564. For sodium hypochlorite service, provide IPS Corp Type 724 cement or another cement certified by the manufacturer for high strength hypochlorite service.

2. CPVC:
   a) Conforms with ASTM F 441 and Appendix, CPVC 4120
   b) Pipe: Extruded from Type IV, Grade 1, Class 23447 material in accordance with ASTM D 1784
   c) Fittings: Conform to ASTM F 438 or ASTM F 439 for pressure fittings, as appropriate to the service and pressure requirement
   d) Solvent Cement: In accordance with ASTM F 493. For sodium hypochlorite service, utilize IPS Corp Type 724 cement or another cement certified by the manufacturer for high strength hypochlorite service.

3. Polypropylene:
   a) Pipe: Schedule 40 dimensions, extruded from Type I 19509 material in accordance with ASTM D 4101
   b) Fittings: Molded from the same material and same laying length as ANSI B 16.12 cast-iron screwed drainage fittings.

4. Stainless Steel:
   a) Pipe: Type 304 or Type 316, schedule 20S minimum or as required for anticipated pressures manufactured in accordance with ASTM A312
   b) Joints: Welded, flanged, or threaded
   c) Passivation of welded piping and fittings in a bath comprised of nitric acid and hydrofluoric acid is required
   d) Field welding of stainless steel is not allowed
   e) Stainless steel piping for chlorine solutions and ferrous/ferric solutions is not allowed.

5. Carbon Steel:
   a) Pipe: ASTM A53 Grade B Schedule 40 or ASTM A106 Grade B Schedule 80
   b) Fittings: ASTM A 105 forged carbon steel

c) Lining and Coating: Provide lining and coating systems suitable for chemical service and environment in accordance with recommendations of a corrosion engineer per Chapter 5.

D. Pipe penetrations:

1. Leak-proof Penetrations: Pipe sleeve with 'Linkseal' or equal in annular space of both sides in following areas at a minimum:
   a) Chemical storage secondary containment areas
   b) Drain sumps.

2. Dry Penetrations: Pipe sleeve with pipe sleeve elastomeric caulking inside annular space on both sides.

E. Pipe Supports: Shall be designed considering structural loads and seismic conditions of site and shall be comprised of materials suitable for service conditions and as follows:

1. Type 316 stainless steel hanger rods, bolts, and hardware for submerged, damp, or otherwise corrosive service conditions.

2. Provide fixed and roller pipe supports as needed for thermal expansion.

3. Use FRP or Type 316 stainless steel materials in areas where corrosive chemicals are stored or handled.

6.13 Valves

A. General: Valves for chemical facilities will be provided for isolation of tanks, piping, and equipment. The type of valve and material shall be compatible with the proposed chemical service as determined by the Engineer. Specific requirements for types of valves are as follows:

1. Ball Valves:
   a) Body: Schedule 80 PVC or CPVC to match pipe service
   b) Non-lubricated, capable of flow from either direction
   c) Lever-operated
   d) End connections: True union
   e) Hypochlorite service: Drill a 0.125-inch hole in the downstream side of the ball; remove burrs from hole. Provide an engraved plastic tag permanently attached to the valve stem stating "drilled for hypochlorite service."

2. Butterfly Valves:
   a) In accordance with AWWA C504
   b) Class: AWWA Class 150B

c) Ends: Flanged or mechanical joint body, wafer body or 'lugged' design is not acceptable
d) Disc and shaft comprised of Type 316 stainless steel
e) Packing: Self-adjusting, V-type packing or chevron-type packing comprised of EPDM or matching seat material.

3. Diaphragm Valves:
   a) Body: PVC with reinforcing ribs at body and end connections
   b) Diaphragm: Unless otherwise specified below, provide two diaphragm layers - Teflon diaphragm with EPDM backing or other material suitable for the intended use.
   c) Ends: Flanged
   d) For sodium hypochlorite service: Three diaphragm layers, Teflon (PTFE), PVDF, and ethylene-propylenediene (EPDM) or Viton backing cushion
   e) Bonnet: Reinforced polypropylene with cast iron or silicon bronze drive nut, double lead acme stem threads, acrylic protective cap, and visual position indicator
   f) Adjustable travel stop: Stainless steel
   g) Compressor: PVDF or cast iron
   h) Handwheel: Polypropylene.

4. Gaskets, O-Rings, Seats: EPDM, Viton, Teflon, or equal fluoropolymer based on chemical compatibility.

6.14 Heating, Ventilation, and Air Conditioning (HVAC)

A. General: Provide HVAC systems for all electrical rooms, occupied spaces, and mechanical rooms, which meet requirements of Chapter 9.

B. Ventilation rates and conditioning shall be per IFC and as required for maintaining chemical storage temperatures to prevent chemical freezing, excessive chemical viscosity, and mitigate chemical degradation.

C. Air Conditioning: Provide air conditioning for all occupied areas and areas where electrical equipment and control panels are housed such as control rooms, electrical rooms, restrooms, and dry polymer storage areas.

D. Evaporative Cooling: Provide evaporative cooling equipment for all enclosed chemical storage areas (except for dry polymer storage areas), mechanical rooms, and other non-occupied spaces.

E. Ductwork: Provide ductwork compatible with anticipated atmospheric conditions. Corrosion environments shall employ FRP or 316 stainless steel ductwork per the Engineer.

6.15 Instrumentation

A. General: The Engineer shall provide instrumentation and control features described as follows and in accordance with Chapter 8.

B. Level Measurement: The following level measurement devices shall be provided and displayed via SCADA:

1. Tank level measurement: Provide non-contact type radar level sensors for all chemical storage tanks with local indication and output to SCADA.

2. Tank level alarms: Provide level switches for indicating low level and high level alarms for all chemical storage tanks.

3. Secondary containment alarms: Provide level switches for indicating high level alarm with local rotating strobe or beacon.

C. Flow Measurement: The following flow measurement devices shall be provided for liquid chemicals where as follows:

1. Metering Pump Flow: Magnetic flowmeters shall be provided with local flow indication for flows greater than 400 gal/day. In lieu of magnetic flowmeters, provide flow switches to alarm low flows for flow less than or equal to 400 gal/day.

2. Flow Switches: Provide flow switches to alarm high flows and low flows outside the anticipated maximum and minimum values.

3. Storage tank discharge provided with high flow switch to close tank isolation valve.

4. Emergency eyewash/shower flow switches: Provide flow switches to indicate flow alarms.

D. Pressure Measurement: The following pressure measurement devices shall be provided:

1. Chemical metering pumps: high-pressure switches and liquid-filled pressure gauges shall be provided for all chemical metering pumps.

2. Sump pumps: Liquid-filled pressure gauges shall be provided for all sump pumps.

E. Provide a single integrator or subconsultant to be responsible for all PLC programming and SCADA per Chapter 8 requirements.

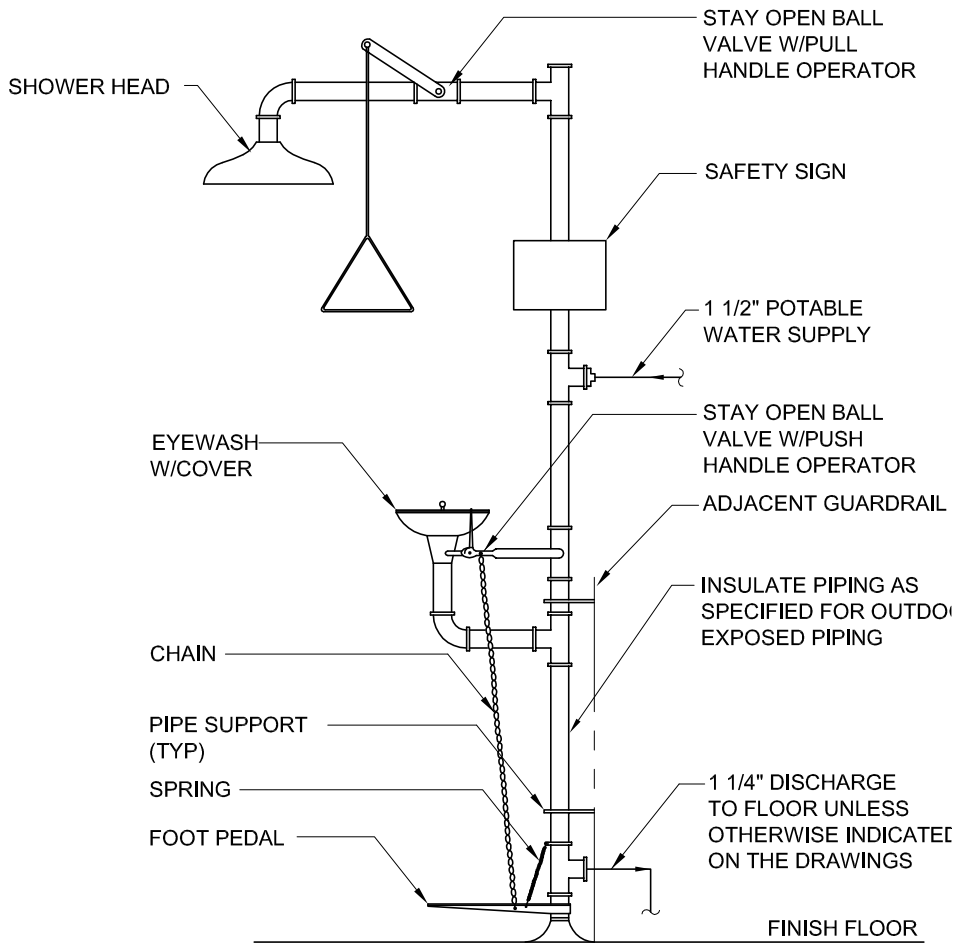

SHOWER TO BE SPEAKMAN MODEL
SCALD PROTECTION BLEED VALVE.

FINAL

REVISIONS	DWN	APVD	APVD	DATE

CITY OF SURPRISE

Maricopa County, Arizona

Water and Wastewater Guidelines

DESIGNED JBR
DRAWN PAT
CHECKED
APPROVED
APPROVED
DATE APRIL 2011

SURPRISE
ARIZONA

EMERGENCY
SHOWER & EYEWASH

SCALE

FIGURE	REV.
6.1	0

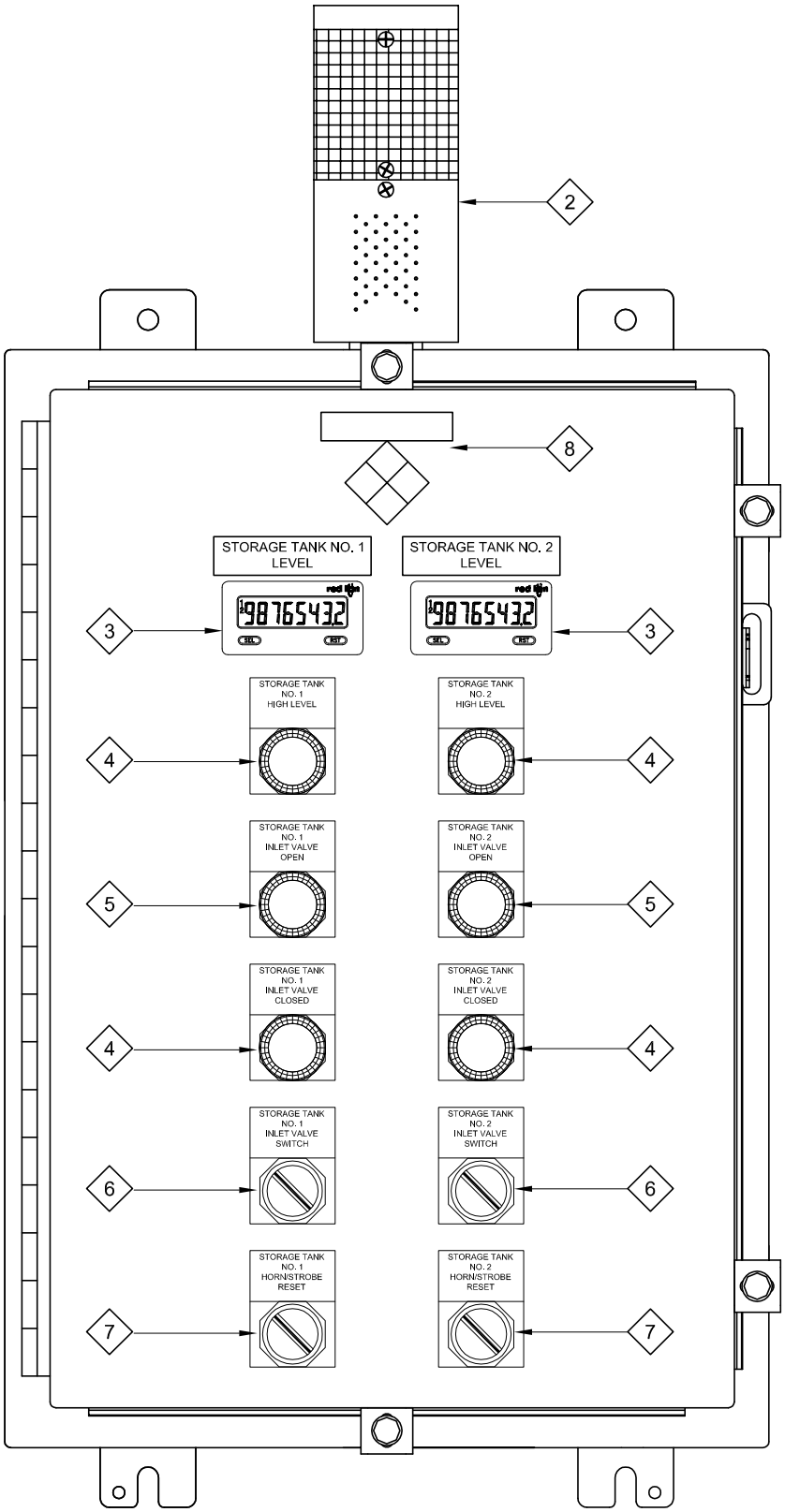

LEGEND

1. NEMA 4X 316 SS ENCLOSURE W/ CONTINUOUS HINGE 24"x16"x8"
2. NEMA 4X INCANDESCENT BEACON & SIREN
3. NEMA 4X LEVEL DISPLAY
4. NEMA 4X 30mm PILOT LIGHT RED
5. NEMA 4X 30mm PILOT LIGHT GREEN
6. NEMA 4X 2-POSITION KEY SWITCH MAINTAINED
7. NEMA 4X PUSH BUTTON
8. CHEMICAL NAME W/ NFPA-704 SIGNAGE

FINAL

REVISIONS	DWN	APVD	APVD	DATE

CITY OF SURPRISE

Maricopa County, Arizona

Water and Wastewater Guidelines

DESIGNED JBR
DRAWN PAT
CHECKED
APPROVED
APPROVED
DATE APRIL 2011

SURPRISE ARIZONA

CHEMICAL UNLOADING STATION PANELS

SCALE

FIGURE	REV.
6.2	0

GENERAL NOTES
1. PROVIDE SIGNAGE PER NFPA-704
2. EXTEND ALL FILL LINES TO WITHIN 6" OF TANK BOTTOM
3. NOZZLES FOR INSTRUMENTATION SHALL BE WITHIN 3' OF EDGE OF PLATFORM

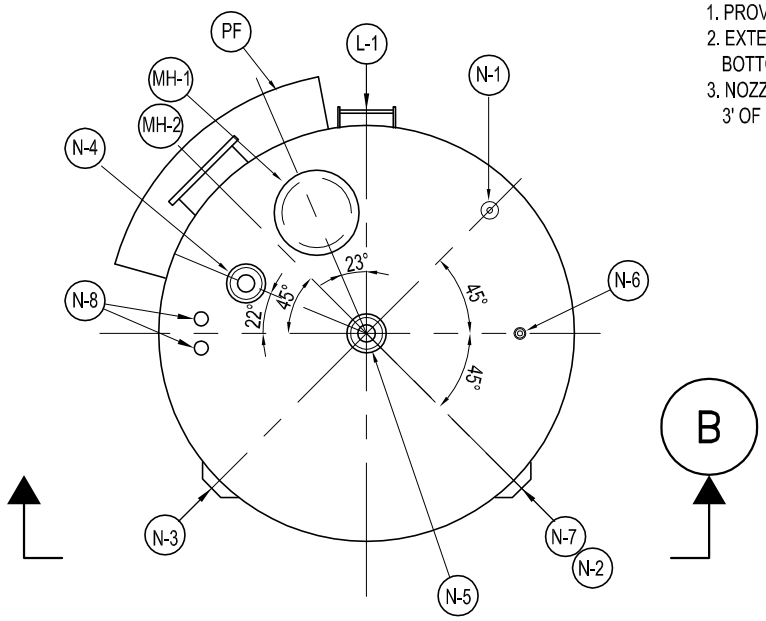

A PLAN

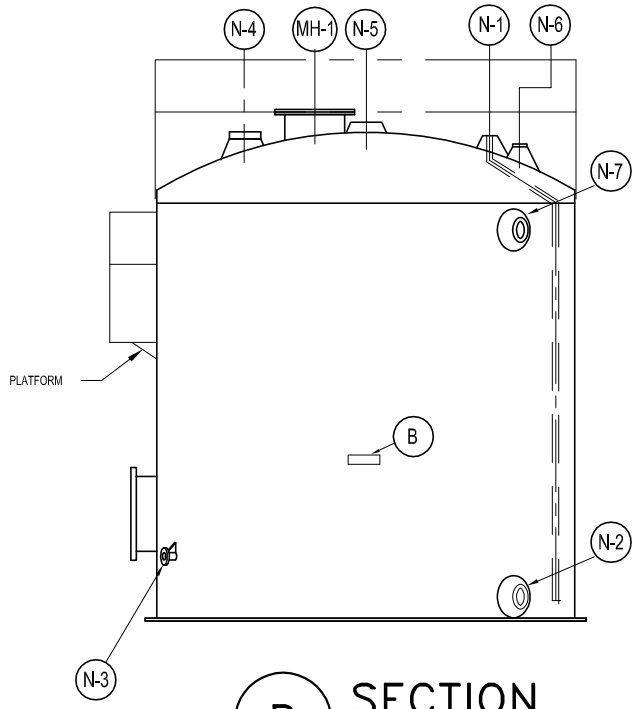

B SECTION

LEGEND	
NO.	SERVICE
N-1	FILL
N-2	FLAT BOTTOM DRAIN
N-3	OUTLET TO METERING PUMPS
N-4	ULTRASONIC SENSOR
N-5	VENT
N-6	SIPHON BREAK
N-7	OVERFLOW
N-8	LEVEL SWITCH
MH-1	BOTTOM ACCESS MANWAY
MH-2	TOP ACCESS MANWAY
L-1	LADDER
B	NAME PLATE
PF	PLATFORM

FINAL

REVISIONS	DWN	APVD	APVD	DATE

CITY OF SURPRISE

Maricopa County, Arizona

Water and Wastewater Guidelines

DESIGNED G.S.
DRAWN PAT
CHECKED
APPROVED
APPROVED
DATE APRIL 2011

SURPRISE ARIZONA

CHEMICAL STORAGE TANKS

SCALE

FIGURE 6.3

REV.

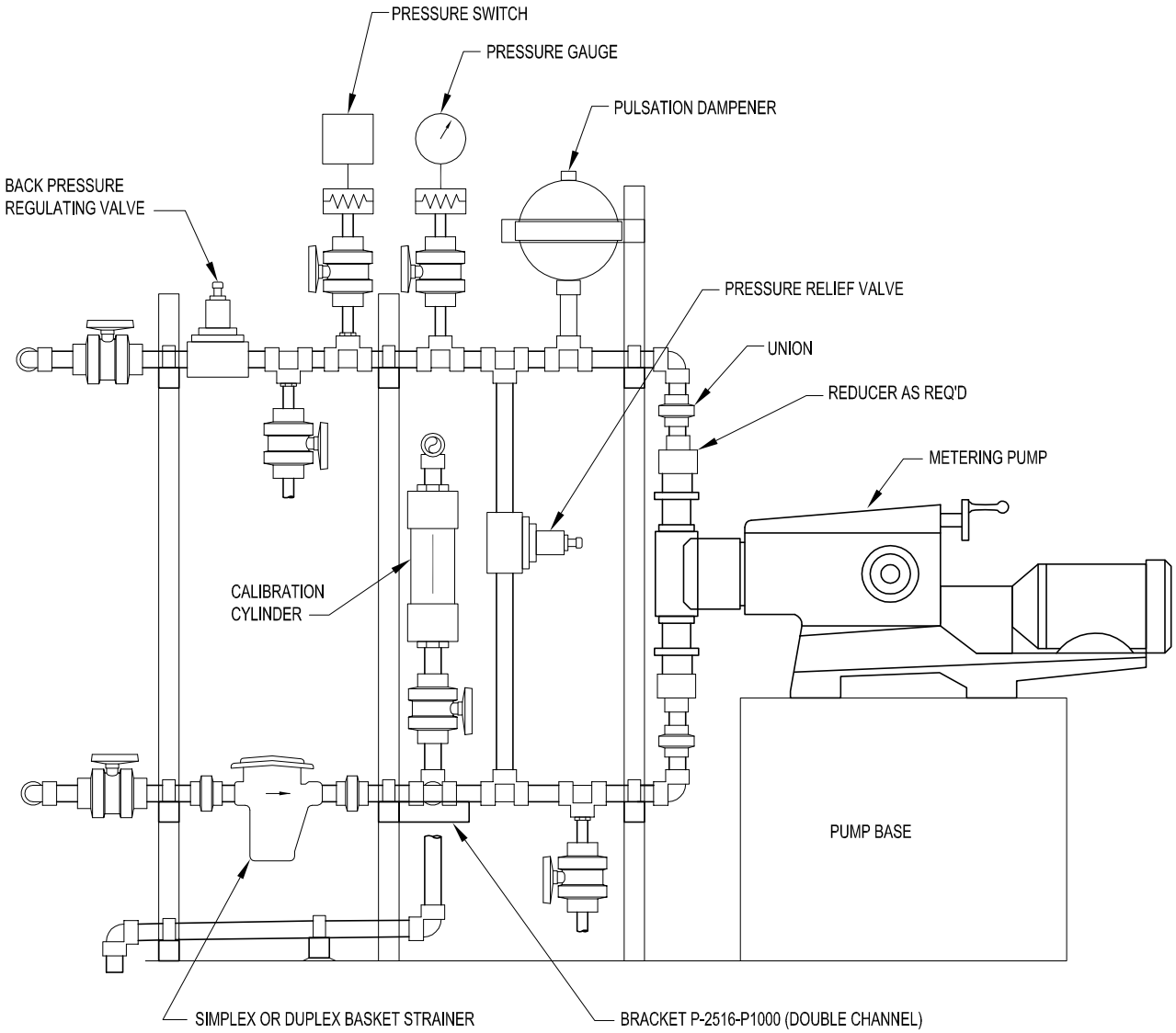

NOTES:

1. ALL VALVES TO BE TRUE UNION BALL VALVES OR DIAPHRAM FOR SODIUM HYPOCHLORITE SERVICE.

2. ALL PREFORMED CHANNEL SUPPORTS TO BE FRP UNLESS OTHERWISE INDICATED ON DRAWINGS.

3. PROVIDE DE-GASSING VALVES FOR SODIUM HYPOCHLORITE SERVICE.

FINAL

REVISIONS	DWN	APVD	APVD	DATE

CITY OF SURPRISE

Maricopa County, Arizona

Water and Wastewater Guidelines

DESIGNED G.S.
DRAWN PAT
CHECKED
APPROVED
APPROVED
DATE APRIL 2011

SURPRISE
ARIZONA

CHEMICAL METERING PUMP

SCALE

FIGURE	REV.
6.4	0

CHAPTER 7 ELECTRICAL REQUIREMENTS

7.01 General

A. The electrical systems shall comply with the currently-adopted version of National Electric Code (NEC). The electrical equipment shall be manufactured in accordance with the following standards:

1. Institute of Electrical and Electronic Engineers (IEEE)
2. National Electrical Manufacturers Association (NEMA)
3. American National Standards Institute (ANSI).

B. All electrical equipment shall be “labeled” indicating compliance with the standards of a nationally recognized testing organization, i.e., Underwriters Laboratory (UL), Factory Mutual System (FM), or Canadian Standards Association (CSA). Provide arcflash labeling where appropriate per NFPA 70.

C. All power distribution equipment and electrical panels shall be ‘dead front’ such that personnel are not exposed to energized terminal blocks, wiring when accessing resets or switches.

D. Explosive atmospheres: All electrical equipment, raceways, and enclosures located in explosive atmospheres per NFPA 820 and Chapter 5 of NEC shall be suitable for Class I, Division I or Class I, Division 2.

E. The electrical design may include one or more of the following:

1. Service entrance sections
2. Switchgear sections
3. Motor control sections
4. Standby and/or dual-power systems
5. Conduit and wiring.

F. Main Disconnect: When the main and/or service disconnect is located within the building or dedicated electrical room, a fire department-approved KNOX box shall be installed on the exterior of the building, entrance gate, or adjacent to the electrical room door as approved by the COS Fire Department.

G. All equipment shall be supported and restrained per structural requirements.

H. Each design shall include power demand information that will be needed in order for Contractor to apply for electrical service from the Arizona Public Service Company. The design shall be provided with short-circuit protection.

I. The Engineer shall coordinate with the City to initiate contact with Arizona Public Service Company for:

1. Projects requiring new utility power supply
2. Expansion of existing utility power that will affect Arizona Public Service Company
3. Obtaining design drawings from Arizona Public Service Company.

J. The Engineer shall be responsible for obtaining federal, state, and local permits for the project in accordance with Chapter 1, which includes but is not limited to the following:

1. Building permits for electrical buildings and facilities
2. Air permits for all generators.

K. The electrical design shall include transient voltage surge suppressors at distribution points for protection of electrical and instrumentation equipment.

L. The design of all electrical facilities shall be completed by a registered electrical Professional Engineer in the State of Arizona.

M. The design shall incorporate provisions necessary for future expansion, which includes but is not limited to future equipment, future instrumentation, future security system, future alarm systems, electrical power for both current and future equipment, spare power conduit, spare control conduit, and space for future electrical equipment.

N. If equipment has handswitches for remote control, the handswitch positions shall be labeled “Hand-Off-Auto”. No other naming convention will be accepted.

7.02 Electrical Room Architectural Requirements

A. General: Electrical rooms shall be designed with sufficient space for equipment access and removal in accordance with NEC and with sufficient egress per the adopted codes and regulations.

B. Walls: Electrical room walls shall be concrete masonry block construction and rated as 4-hour fire walls.

C. Housekeeping pads: All electrical equipment shall be installed in reinforced concrete housekeeping pads.

D. Signage shall be provided to clearly identify electrical disconnects as well as all electrical panels with rated voltage, amps, lockout-tagout requirements, and any other appropriate warnings.

E. Doors: Doors shall be required as follows:

1. A minimum of one set of double doors is required with direct outdoor access for rooms where MCCs and other panels that exceed 3-ft. width are installed.

2. A minimum of one 3-wide door to building exterior shall be provided.

3. Provide double doors with a removable transom to allow for removal of large equipment such as MCCs.

7.03 Electrical Room HVAC Requirements

A. General: Provide HVAC systems for all electrical rooms, occupied spaces, and mechanical rooms, which meet requirements of Chapter 9.

B. Electrical rooms and spaces shall be conditioned with air conditioning to maintain suitable temperature and low humidity. Evaporative cooling of electrical rooms and spaces is not allowed.

C. Spaces that house electrical equipment shall be air-conditioned. Examples of equipment include but are not limited to the following:

1. Motor Control Centers (MCCs) where VFDs or soft-starts are housed

2. Programmable Logic Controller (PLC) panels

3. Uninterruptible Power Supply panels and PLC panels shall be housed in an air-conditioned space.

4. Variable Frequency Drives

5. Solid State Soft Starters.

7.04 Electrical Power System Study

A. The Engineer shall prepare an Electrical Power System Study using ETAP Power Station software or equivalent for all projects, which shall include the following:

1. Background section to describe existing conditions and proposed loads, which addresses future expansion
2. Single line diagrams that illustrate existing and proposed loads, which addresses future expansion
3. Electrical Short-Circuit Analysis of proposed facilities, which addresses future expansion
4. Load Flow Analysis with load summary
5. Arc-Flash Analysis
6. Harmonic Analysis
7. Recommendations and conclusions
8. The results shall be summarized in a written report that is signed and sealed by an electrical engineer registered in the State of Arizona.

B. The Engineer shall include a requirement in the contract documents for the Contractor to update the existing Electrical Power System Study developed by the Engineer with actual installed equipment information using ETAP Power Station software or equivalent for all projects, which includes the following:

1. Background section to describe existing conditions and proposed loads, which addresses future expansion
2. Single line diagrams that illustrate existing and proposed loads, which addresses future expansion
3. Electrical Short-Circuit Analysis of proposed facilities, which addresses future expansion
4. Load Flow Analysis with load summary
5. Arc-Flash Analysis
6. Harmonic Analysis

7. Protective Coordination Study

8. Recommendations and conclusions

9. The results shall be summarized and submitted for review by the Engineer of record before inclusion as part of the operation and maintenance manuals.

10. Contractor shall be responsible for updating the protective devices settings in field based on the recommendations of the report.

7.05 Electrical Equipment, Conduit, and Conductor Sizing and Rating

A. Electrical equipment shall be sized to continuously carry all electrical loads, both current and future, without overloading in accordance with NEC. Equipment and materials shall be rated to withstand and/or interrupt the available fault current.

B. Electrical conduits shall be sized to carry all electrical loads, both current and future without overloading in accordance with NEC.

C. Electrical power conduits shall be sized to contain appropriate size and number of conductors for ultimate design conditions.

D. Encased and embedded conduits: For conduits installed in concrete or under base slabs, etc., the Engineer shall provide and stub-up at all major equipment and panels. The minimum size of buried conduit and embedded concrete is 1 inch.

E. Exposed conduits: The minimum size of exposed conduits is 3/4 inch.

F. Spare conduits: At least one spare conduit for every five placed with a minimum of one spare. The minimum size of spare conduits shall be larger of 1-inch diameter or the largest size conduit used, whichever is largest.

7.06 Grounding and Bonding

A. General: The electrical design shall include appropriate grounding based on the NEC.

B. Ground rods shall be copper-clad steel conforming to UL 467, 3/4 inch in diameter by 10 feet in length of earth contact.

C. Connections above grade shall be made with bolted solderless connectors, and those below grade shall be made by a fusion-welding process.

D. Grounding electrode conductor, service entrance ground wires shall be sized in accordance with NEC.

E. Equipment grounding conductors shall be sized in accordance with NEC. Ground wires shall be protected by conduit, where such wires run exposed above grade or are run through concrete construction.

F. Equipment frames of motor housings, metallic tanks, metallic equipment enclosures, metal splicing boxes, chain-link fencing, handrails, and other metallic noncurrent-carrying metal items shall be grounded. Connections to earth shall be made in the same manner as required for system grounding.

G. Surge arresters shall be grounded. Resistance to ground for intermediate-class arresters shall be not more than 10 ohms and for distribution-class arresters shall be not more than 25 ohms. Ground wire connections shall be not less than No. 4 AWG for distribution arresters and No. 1/0 AWG for intermediate arresters.

H. Lighting poles base shall be connected to an adjacent ground rod.

I. Metallic structures and buildings shall be grounded per NEC.

J. Grounding rings shall be installed using bare copper cable with ground rods at least 25-feet intervals using thermoweld connecting means in accordance with NEC requirements.

K. Duct banks shall contain a concrete-encased system bare copper ground conductor. The system ground conductors shall run continuously in duct banks, through handholes, and other raceway boxes and shall:

1. Be connected to the structure grounding systems to provide a continuous grounding system

2. Be bonded to each metallic raceway, panel, switchboard, and other metallic devices associated with the electrical and control systems.

7.07 Electrical Identification

A. Conduit markers based on manufacturer’s standard pre-printed, flexible or semi-rigid, permanent, plastic-sheet conduit markers. Exterior installation shall be meet weatherproof requirements.

B. Cable and conductor wire markers shall be self-laminating vinyl on white background, printed using a printer. Handwritten wire markers are not acceptable. See preferred vendor equipment list.

C. Engineer shall provide a cable/conductor identification schedule in the design drawings, which shall include but not be limited to cable/conductor identification, including voltage, phase and feeder number on each

cable/conductor in each box/enclosure/cabinet where wires of more than one circuit or communication/signal system are present. Match identification with marking system used in panelboards, shop drawings, specifications, and similar previously established identification for project's electrical work.

D. Circuit Identification:

1. The 3-phase wires shall be identified at the switchgear, panelboards, and MCCs as Phases A, B, and C.

2. In addition to color-coding, each conductor shall be identified in panelboard, cable tray, or termination with circuit identification labels. This identification is applicable to all power, control, alarm, and instrumentation conductors. Markers shall be slip on PVC sleeve type. See preferred vendor equipment list.

3. Labels for other cabling shall be label number B-292 vinyl. See preferred vendor equipment list.

4. Exposed medium voltage conduits shall be labeled at 50-foot intervals with 1-inch letters stating the voltage - example - "12,470 volts." Labels shall be vinyl plastic. See preferred vendor equipment list.

E. Provide Arc Flash stickers on all equipment and panels based on arc flash analysis per 7.04 with Personnel Protection Equipment (PEE) requirements.

7.08 Wires and Cables

A. 600 Volt Class Cable Conductor:

1. Wire sizes shall be American Wire Gauge (AWG) sizes with Class B stranded construction. No. 2 AWG and smaller shall be factory color-coded with a separate color for each phase and neutral, which shall be used consistently throughout the system. Larger cables shall be coded by the use of colored tape. Conductors sized No. 1 and larger shall be Type 2, rated for 90 degrees C. All circuit conductors, No. 6 or smaller shall be "THWN" stranded copper. All other conductors shall be "XHHW-2" stranded copper.

2. Individual or multiple conductor cables for power, control, and alarm circuits of 480 volts or less shall be insulated for not less than 600 volts. No wire external to panels and MCCs shall be less than No. 12 AWG. Panel control wiring shall not be less than No. 14 AWG.

3. Power conductors for lighting and receptacles only may utilize “THWN” solid conductors.

4. Power conductors shall be manufactured by preferred vendor. See preferred vendor equipment list.

B. Instrumentation Cable:

1. Instrument cable shall be Type TC and shall be insulated for not less than 600 volts. Conductor size shall be No. 16 AWG minimum. Twisted shielded, grounded instrumentation cable shall be used for all analog signals.

2. Cable Identification: All conductors shall be numbered with “tube sleeve” type tags with heat impressed letters and numbers.

3. Instrumentation conductors shall be manufactured by preferred vendor. See preferred vendor equipment list.

7.09 Electrical Conduit

A. Raceways:

1. Exposed conduit in an unclassified or hazardous area shall be rigid metal conduit (RMC).

2. Conduits in damp and corrosive areas shall be PVC coated RMC.

3. Underground and/or concrete encased conduits shall be PVC, except elbows, which shall be PVC-coated RMC.

4. Underground to aboveground conduit transitions shall be PVC-coated RMC.

5. No aboveground conduits shall not be smaller than 3/4 inch.

6. No underground conduit shall be less than 1 inch.

7. In unclassified areas, flexible conduit shall be grounding type, weatherproof, corrosion resistant, and watertight. Conduit shall not exceed a maximum of 36 inches in length.

8. All spare conduits shall be installed with a blue nylon pull string and shall be capped or plugged.

9. Brass labels shall be connected at each starting and ending point of the conduit to identify the “to” and “from” locations.

7.10 Standby Power

A. General: Permanent standby power shall be provided as required in individual facility chapters and where it is not feasible or economical for facilities to be provided with redundant utility power. The following requirements apply to all standby power facilities:

1. Sized to operate essential loads. Essential loads are defined as those loads required to meet facility production/treatment requirements in accordance with the facility permit and include (at a minimum) the following:
   a) Mechanical equipment
   b) Instrumentation and controls
   c) Security
   d) Emergency lighting.

2. Equipped with automatic transfer switch that automatically initiates operation of standby generator when utility power is lost and automatically returns facility to utility power when utility power is restored. Automatic transfer switch shall be fed off the main service equipment.

3. Essential loads/equipment will automatically restart if called upon when transfer to emergency or normal power.

4. Designed to continuously operate essential loads from diesel fuel supply for at least 24 hours and in accordance with the COS air permit requirements.

5. Equipped with automatic exercise function and cool down feature that load tests the generator once per week or as recommended by the generator manufacturer and in accordance with the COS air permit requirements.

B. Pumping Facilities: Standby power for pumping facilities shall be designed as follows:

1. Sized to operate all pumps in the facility, current essential loads, and future loads

2. Equipped to not allow simultaneous operation of equipment from utility power and standby power.

C. Fuel Storage Reservoirs: Fuel storage tanks shall be designed as follows:

1. If possible, the fuel storage should be a UL Listed sub-base type structure located under the generator. The storage tank shall be manufactured by the same manufacturer as the generator.

2. Otherwise, the fuel tank should be a UL Listed.

3. All fuel storage facilities and associated fire protection shall be approved by the COS fire marshal.

D. Generators shall be manufactured by preferred vendor. See preferred vendor equipment list.

7.11 Non-Utility, Pad-Mounted Transformers.

A. General: Facilities that require 480-V power shall be equipped with pad-mounted transformers located on the exterior of the building and beneath a shaded structure that matches the architectural elements of the surrounding buildings.

B. Transformer shall include all devices, wiring, fans, and auxiliary equipment necessary for automatic temperature-controlled forced-air cooling to obtain an additional 15 percent capacity on units 750 through 2000 kVA and an additional 25 percent capacity on units 2500 kVA and over.

C. The transformer shall carry its continuous rating with average winding temperature rise by resistance that shall not exceed 65 degrees Celsius temperature rise, based on average ambient of 30 degrees Celsius over 24 hours with a maximum ambient of 40 degrees Celsius, as defined by ANSI, without loss of service life expectancy.

D. The main transformer tank and attached components shall be designed to withstand pressures 25 percent greater than the required operating design value without permanent deformation. Construction shall consist of carbon steel plate reinforced with external sidewall braces. All seams and joints shall be continuously welded.

E. Insulating liquid shall be silicone-insulating liquid, UL or FM listed as a “Less Flammable” transformer insulating liquid. Provide air terminal compartments for connecting to remote equipment on primary and secondary side of transformer.

F. The transformer shall be designed to carry short-time emergency overloads in accordance with ANSI C57.92 and NEMA TR 98 as applicable. Duration and magnitude of designed withstand capability shall be as outlined in ANSI C57.12 and the latest draft of the IEEE Short Circuit Test Code.

G. Transformer features and accessories shall include:

1. De-energized tap changer with cover mounted
2. Externally operated, padlockable handle
3. Combination drain and filter valve, and sampling device
4. Manual gas pressure test connection
5. One-inch filling plug and filter press connection in cover
6. Dial-type top liquid thermometer
7. Magnetic liquid level gauge
8. Provisions for lifting, jacking, and rolling in two directions
9. Copper ground pad
10. Instruction nameplate
11. Pressure vacuum gauge.

H. Windings: All high voltage windings shall be copper.

I. Transformers shall be manufactured by preferred vendor. See preferred vendor equipment list.

7.12 Switchgears (Medium Voltage)

A. General: Switchgears shall be freestanding, self-supporting equipment equipped with interrupter switches and fuses that meet or exceed the latest edition of ANSI/IEEE C37.20.3 Standard for Metal-Enclosed Interrupter Switchgear.

B. The construction of the switchgear enclosure shall be of the universal frame type using die-formed welded and bolted members; panels should be 11-gauge steel bolted in place.

C. Busbars shall be copper, fully insulated, and silver-plated at the joints. A full-length ground bus shall be provided at the bottom of the switchgear enclosure.

D. Grounding shall be provided through a grounding pad and copper-grounding rod.

E. Incoming and outgoing switch or circuit breakers sections shall have ample spaces for medium voltage, 133 percent shielded, jacketed single conductor stress-cone terminations, and lighting arrestors.

F. There shall be a clear indication of switch or circuit breaker position, a high-impact type viewing window for interrupter switches, and status lights for circuit breakers.

G. Medium voltage switchgears shall be manufactured by preferred vendor. See preferred vendor equipment list.

7.13 Switchgears (480 V), Switchboards, and Distribution Panels

A. General: Switchgears, switchboards, and distribution panels shall be freestanding, self-supporting equipment with overcurrent protection devices that meet or exceed the latest edition of ANSI, IEEE, and NEC Standards.

B. Busses shall be copper, fully insulated, and silver-plated at the joints. A full-length ground bus shall be provided at the bottom of the enclosure.

C. Grounding shall be provided through a grounding pad and copper grounding rod.

D. Provide TVSS (Transient Voltage Surge Suppressants) at appropriate equipment.

E. Switchgears, switchboards, and distribution panels shall be manufactured by preferred vendor. See preferred vendor equipment list.

7.14 Variable Frequency Drives (VFDs)

A. The VFD shall consist of 6- or 18-pulse full-wave diode bridge rectifier, a DC bus, a power transfer inverter and line load reactor, and an input single loss relay to trip the drive. 6 pulse shall only be utilized on smaller than 100 HP motors. 6-pulse VFDs shall be equipped with line side filters and load side dv/dt mitigating devices. 18-pulse drives shall only be utilized on 100 HP motors and above.

B. If required harmonic suppression equipment is necessary based on a harmonic analysis study, the equipment shall be provided in conjunction with the VFD. Equipment selection and design, as well as design calculations, will be reviewed by the City on a case-by-case basis.

C. VFD system motors shall have a service factor of 1.20 (or 1.15 and de-rated by 5 percent of nameplate horsepower). Motors shall be specifically designed for operation with selected variable-speed drive for the specific application.

D. Conductors between the VFD and motor to be sized for 150 percent of the full load amps of the motor.

E. Where applicable, VFDs shall be housed in the MCC. Where VFDs cannot be housed in the MCC, a stand-alone enclosure is acceptable.

F. Specifications for VFDs shall address the following:

1. Motor protection relay
2. Power requirement as a function of pumping capacity
3. Allowable supply voltage wave form distortion
4. Allowable supply voltage notch area
5. Minimum and maximum allowable power factor over working speed range
6. Minimum allowable efficiency at full speed and load
7. Required operating ambient temperature range
8. Required diagnostics provisions
9. Control and monitoring signal interface
10. Allowable acoustical noise level
11. Adjustable ramp acceleration/deceleration time
12. Characteristics (available short-circuit current X/R ratio) of power supply including alternate and standby power supplies
13. Allowable speed regulator error
14. Provide VFD recommended spare parts based on manufacturer requirements
15. VFD shall be provided with a communication port capable of communicating with the PLC.

G. VFDs shall be manufactured by preferred vendor. See preferred vendor equipment list.

7.15 Soft Starters

A. Soft starters shall be used with all constant speed pumps with motors 20 hp or larger, provide power factor corrections capacitors with soft start and soft stop motor starters. Starters shall be designed for the pump control algorithm.

B. Soft Starters less than 100 HP shall be equipped with an integral bypass.

C. Soft Starters must have the following features:

1. Over and under voltage protections
2. Over and under current protections
3. Programmable soft start and soft stop features
4. Phase loss and frequency protection
5. Other unbalanced or over-limit functions.

D. Soft Starters shall be manufactured by preferred vendor. See preferred vendor equipment list.

7.16 Motor Control Centers

A. All MCCs shall be provided with a solid state monitoring device and with the following as they apply:

1. Selector switches for Hand, On, Off, Auto, Remote
2. SCADA and Indicator Lights for On, Off, Fail, Alarm
3. All equipment lights shall be Light Emitting Diodes (LED) type

B. Main Disconnect: The Engineer shall lay out the facility such that the main disconnect on the MCC is located adjacent to an exterior door or provided in a dedicated electrical room with exterior access. If site requirements or other building requirements prevent this, a service disconnect shall be located just inside an easily accessible exterior door.

C. Additional requirements for MCC units are as follows:

1. Low-voltage motor control assemblies conforming to the standards for NEMA Class I, Type B assemblies
2. Each assembly shall consist of vertical, freestanding sections in accordance with industry standards.

3. The door of each unit containing a disconnect device shall be interlocked so the door cannot be opened unless the device is in the “OFF” position. All unit doors shall be swing doors with locks and continuous length hinges. All MCC units shall be rodent proof.

4. All indicator lights mounted on the MCC shall be of the push-to-test type, LED bulbs only.

5. Each wire end, terminal, and terminal connection shall be uniquely identified with a number.

6. Provide Transient Voltage Surge Suppressor (TVSS) surge protection.

7. Provide Arc Flash stickers with Personnel Protection Equipment (PEE) requirements.

8. All lighting transformers and panelboards shall be integral within the MCC. If size of transformer exceeds the manufacturer’s recommendations of integral, an external transformer and panelboard is acceptable.

9. MCC drawings shall identify all circuit numbers.

10. Controls shall be such so that the equipment will restart after loss of control power.

D. Trip Calibration:

1. Motor overload protection shall be selected based on final motor nameplate information. Size Motor Circuit Protectors (MCP) to coordinate with motor starting characteristics and overload protection. Submit the following for each motor to the City:
   a) Equipment project identification number
   b) Nameplate information
   c) Overload device trip range
   d) Overload device setting
   e) MCP trip device rating
   f) MCP trip device setting if different from rated value.

E. MCCs shall be manufactured by preferred vendor. See preferred vendor equipment list.

1. Set trip devices per the coordination study and verify devices are operating within manufacturer’s tolerances. Make changes to settings not complying with requirements furnished by the Engineer in

accordance with the Technical Specifications. Device settings will be furnished for following equipment:

a) Medium voltage system
b) Low voltage switchgear
c) Secondary unit substations.

7.17 Lightning Protection

A. The Engineer shall provide lightning protection for all facilities, which utilize motorized equipment and/or instrumentation.

B. Standards: The lightning protection system will meet the requirements of the following:

1. Lightning Protection Institute (LPI) LPI 175 - Standard of Practice
2. ANSI/NFPA 780 - Lightning Protection Code
3. UL 96 - Lightning Protection Components
4. UL 96A - Installation Requirements for Lightning Protection Systems.

C. Lightning Protection shall be ANSI/NFPA 780; Class I UL 96A and consist of the following at a minimum:

1. Copper Air terminals on roof(s)
2. Bonding of structure where applicable and other metal objects.

D. Conductor Installations:

1. Install the lightning protection roof system(s) grounding and bending conductors exposed on flat roof areas and concealed at ridge roof areas.
2. Install main downleads completely concealed and sleeved.
3. Other than for the purpose of protecting downlead conductors from damage up to 6 inches above grade level, do not use exposed conduits to conceal the downleads on the exterior of outside walls.
4. Use minimum 1-inch PVC conduits to protect lightning system conductors from damage and bond both ends of PVC-coated rigid steel conduit to conductor.

E. Clearances: Assure 6-foot minimum distance required by NEC:

1. From lightning rod conductors to non-current carrying metal parts of electrical equipment unless they are bonded to the rods

2. From lightning system conductors to open conductors of communication systems

3. From lightning protection grounding electrodes to electrodes of other grounding systems.

F. UL Inspection Certification: Upon completion of installation of the lightning protection, the Engineer shall require that the lightning protection system be physically inspected and certified by Underwriters Laboratories and furnish a UL Master Label.

1. Lightning protection shall be as manufactured by preferred vendor. See preferred vendor equipment list.

7.18 Electrical Ductbanks

A. Concrete encase major ductbanks below grade shall be polyvinyl chloride (PVC) Schedule 40 conduits in concrete envelop.

B. PVC-coated rigid steel conduit shall be used for all stub-ups and the last 3 feet before exit from earth or entry to structure. The minimum concrete over the outside of the conduit shall be 4 inches.

C. Ductbanks under roadways shall be reinforced with a minimum of four #4 reinforcement bars per each ductbank at a maximum of 18 inches on center parallel to the duct bank and #3 reinforcement bar wraps on 24 inches centers (maximum) for the length of the ductbank. The minimum concrete cover over the reinforcing steel shall be 2 inches. Red concrete is required for all ductbanks.

D. A 3-inch wide detectable plastic marker tape with inscription “CAUTION! ELECTRIC LINES BURIED BELOW” shall be placed above the ductbank.

E. Unless otherwise noted by the City, all ductbanks shall have 36 inches of backfill cover.

7.19 Lighting

A. General: The Engineer shall be responsible for designing interior and exterior lighting for all projects. Lighting illumination levels shall be per Illuminating Engineering Society of North America (IESNA).

B. Interior Lighting: Shall utilize fluorescent, compact fluorescent, metal halide high intensity discharge. Lamps shall be high efficiency rated.

C. Exterior Lighting: Must be 'Dark Sky Compliant' to minimize light pollution for adjacent properties and shall utilize High Pressure Sodium HID or Metal Halide HID lamps. Lamps shall be high efficiency rated. Lighting shall also be:

1. Provided with integral mounting pole and bracket shall be capable of withstanding:
   a) Designed for wind levels per site conditions without damage
   b) Designed for seismic levels per site conditions
   c) Equipped with corrosion-resistant hardware and hinged doors or lens retainer.

2. Lighting shall be equipped with one photoelectrical control, which shall be tied into all the fixtures.

3. Hand/Off/Auto Switch for all exterior lights to enable testing shall be located in the interior of a building.

4. Each entrance or exit door to a building shall have a fixture mounted overhead.

5. All exterior and interior light fixtures shall be connected to light switches for manual on/off purposes.

6. Electrical pull boxes shall be identified as City of Surprise Electrical marking.

7.20 Security

A. The Engineer shall contact City to request the most recent security guidelines.

B. Provide separate access for all APS service entrances with the minimum equipment clearances as illustrated in Figure 7.1.

7.21 Electrical Drawings

A. Electrical drawing package shall include the following drawings in addition to other drawings to clearly convey a complete and constructible project.

1. Electrical layout drawings shall identify, but not limited to the following:
   a) All electrical equipment, field instrument, and instrument panel that has electrical connections

b) Plans for all electrical ductbanks/buried conduits
c) Plans and stationed profiles for all major ductbanks, which includes all ductbanks with 480 V and greater as well as handhole/manhole locations
d) Plans for electrical ductbanks up to the facility transformer shall be provided by APS and incorporated into the design drawings
e) Grounding system
f) Electric utility information
g) All conduits shall have unique numbers
h) Demolition equipment.

2. Electrical single-line diagram drawings shall identify, but not limited to the following:
   a) Main service entrance equipment, which identifies the protective devices
   b) 480 V distribution equipment, motor loads, non-motor loads
   c) Load calculations for each piece of electrical equipment
   d) 120 V lighting transformer and panelboards
   e) 120 V panel schedules
   f) Conduit and cable schedules or block diagrams shall show all unique wire numbers.

3. Electrical schematic drawings shall identify, but not limited to the following:
   a) The control circuit, which identifies the necessary components to control the equipment based on the Process and Instrumentation Diagrams (P&ID) and the control philosophy
   b) The discrete and analog input/outputs from the Programmable Logic Controller to the electrical equipment and instruments
   c) Connection diagram showing the wires from the electrical equipment or instruments to associated pieces of equipment
   d) Controls shall be such so that the equipment will restart after loss of control power.

7.22 Electrical Specifications

A. The Engineer shall compile electrical specifications for each type of field and panel-mounted electrical equipment and associated appurtenances, which include but is not limited to all equipment, panels, raceways, and conductors included in this Chapter.

B. Work Sequencing and Constraints: The Engineer will include a work sequence in the contract documents that includes known constraints that address:

1. Operation of existing facilities impacted

2. Proposed sequence of construction that minimizes shutdown of facilities and bypass pumping operations.

DIMENSIONS & MINIMUM SAFETY WORKING CLEARANCES
APS TRANSFORMERS - THREE PHASE
112kva - 750kva

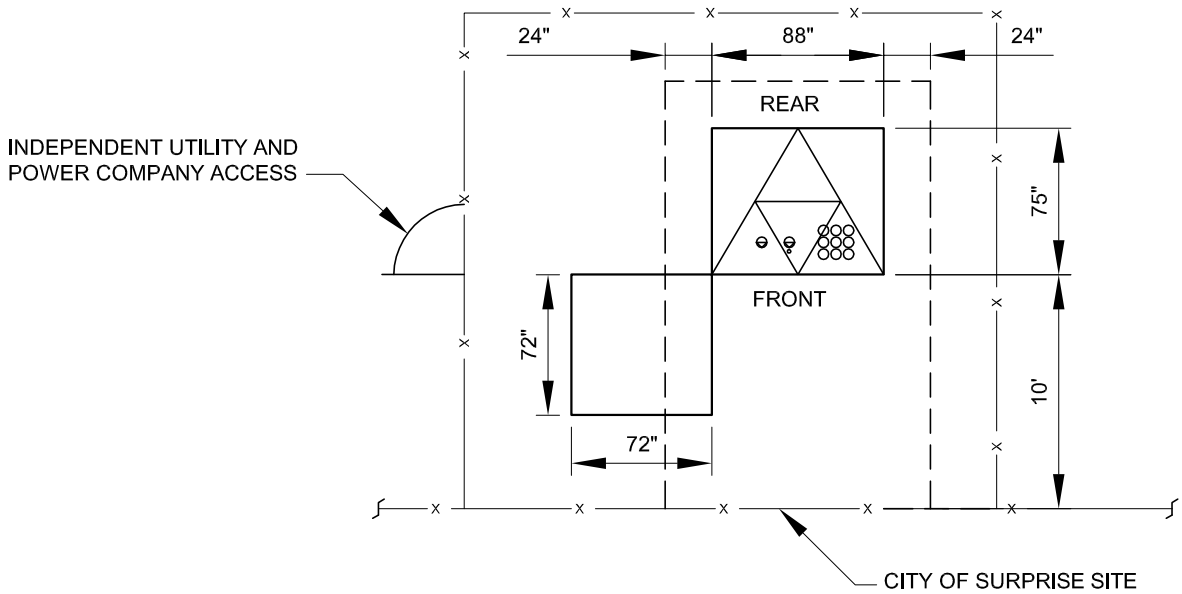

DIMENSIONS & MINIMUM SAFETY WORKING CLEARANCES
APS STANDARD SWITCHING CABINET - 600AMP

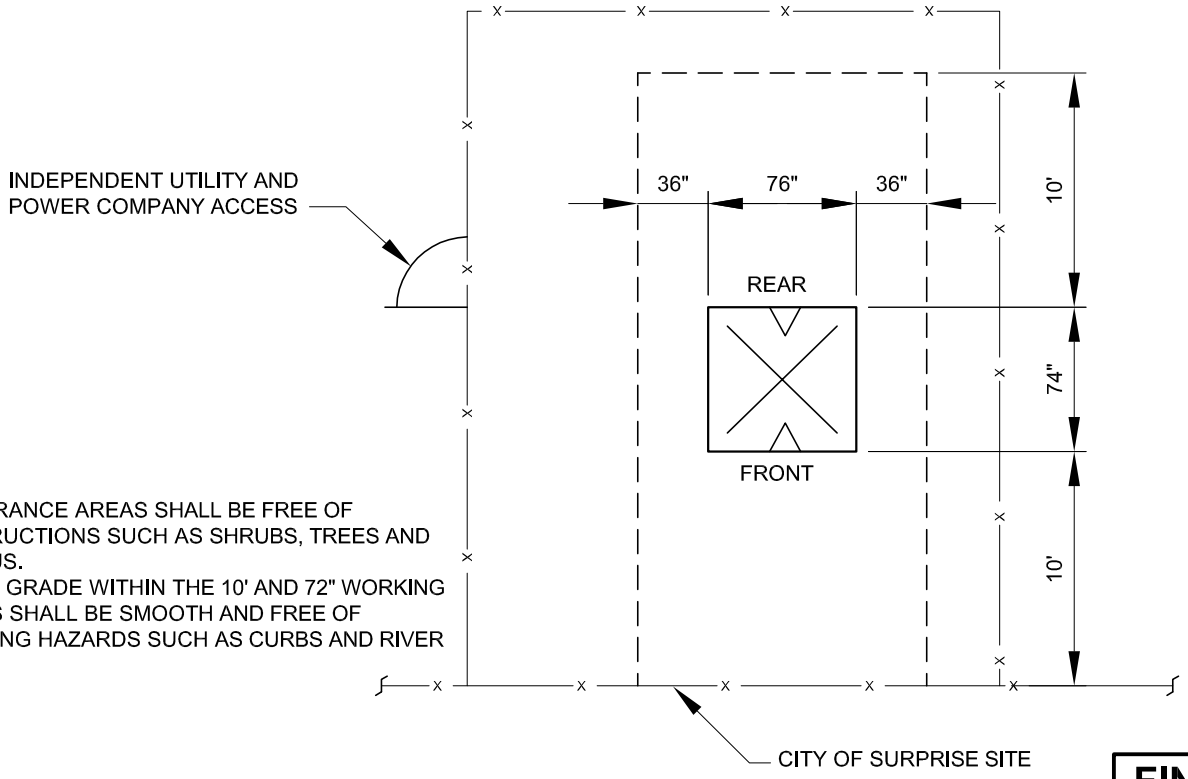

NOTES:
1. CLEARANCE AREAS SHALL BE FREE OF OBSTRUCTIONS SUCH AS SHRUBS, TREES AND CACTUS.
2. FINAL GRADE WITHIN THE 10' AND 72" WORKING AREAS SHALL BE SMOOTH AND FREE OF TRIPPING HAZARDS SUCH AS CURBS AND RIVER ROCK

FINAL

REVISIONS	DWN	APVD	APVD	DATE

CITY OF SURPRISE
Maricopa County, Arizona
Water and Wastewater Guidelines

DESIGNED G.S.
DRAWN PAT
CHECKED
APPROVED
APPROVED
DATE APRIL 2011

SURPRISE
ARIZONA

UTILITY POWER SERVICE
ENTRANCE ACCESS

SCALE

FIGURE	REV.
7.1	0

CHAPTER 8 INSTRUMENTATION AND CONTROL

8.01 General

A. The instrumentation and control systems shall be provided to monitor, control, and operate a process. The design shall comply with National Electric Code (NEC) and applicable local codes. Equipment shall be manufactured in accordance with:

1. Institute of Electrical and Electronic Engineers (IEEE)
2. National Electrical Manufacturers Association (NEMA)
3. National Fire Protection Association (NFPA).

B. The instrumentation and control equipment shall require a “label” indicating compliance with the standards of a nationally recognized organization, such as Underwriters Laboratory (UL) or Factory Mutual System (FM).

C. All PLC control panels and vendor control panels shall be ‘dead front’ such that personnel are not exposed to energized terminal blocks, wiring when accessing resets, or switches.

D. Applicable Codes and Standards.

Table 8.1 Instrumentation and Control Standards Water and Wastewater Guidelines City of Surprise

Reference	Title
API RP550	Manual on Installation of Refinery Instruments and Control Systems
IEEE 100	Dictionary of Electrical and Electronic Terms
IEEE 472	Guide to Surge Withstand Capability (SWC) Tests
ISA S5.1	Instrumentation Symbols and Identification
ISA S5.3	Graphic Symbols for Distributed Control/Shared Display Instrumentation, Logic, and Computer Systems
ISA S5.4	Instrument Loop Diagrams
ISA RP7.3	Quality Standard for Instrument Air
ISA RP12.6	Installation of Intrinsically Safe Instrument Systems in Class I Hazardous Location
ISA S18.1	Annunciator Sequences and Specifications
ISA S20	Specification Forms for Process Measurement and Control Instruments, Primary Element, and Control Valves

Table 8.1	Instrumentation and Control Standards Water and Wastewater Guidelines City of Surprise
Reference	**Title**
ISA 51.1	Process Instrumentation Terminology
NEMA 250	Enclosures for Industrial Controls and Systems
NEMA ICS	Industrial Control
NFPA 70	National Electrical Code (NEC)
NFPA 72	National Fire Alarm Code

E. A qualified Control Systems Integrator (CSI) is required for all projects that entail controls and automation. The CSI is required to provide at least 3 project references and contact information and a minimum of 5 years of recent experience completing systems integration for projects of equivalent complexity as part of the Contractor's bid for the project. Prior to startup, the CSI is required to submit a detailed project approach that includes system diagrams, lists of hardware, equipment, configuration, and software as well as system descriptions in order to demonstrate project understanding to the COS and/or the COS representative. This CSI will have single point responsibility, through the Contractor, for all integration project elements, which includes but is not limited to the following:

1. Providing software and hardware for SCADA, PLC(s), and HMI(s)
2. PLCs, HMIs, PCs, and all other work stations, servers, and associated terminals
3. Programming and configuration for SCADA, PLC(s), and HMI(s)
4. Telemetry
5. Instrumentation testing, calibration, and integration
6. Loop checks
7. Startup: The CSI shall be responsible for a full and operational instrumentation and control system of the project during startup.

F. Existing Instrumentation and Controls: Where construction of new facilities impacts existing facilities, all existing PLCs, SCADA, and HMIs shall be upgraded by the CSI to incorporate the new I&C requirements.

8.02 Analog Analyzers

A. General: Analyzers shall be provided as required for process monitoring and control as follows:

1. Suitable for 120 VAC or 24 VDC power source
2. Integral HART communication protocol
3. Control panel rated NEMA 4X (IP65 or IP66) with FRP or stainless steel construction equipped with LED or LCD indication of measured value
4. Compatible with service temperature, pressure, humidity, and atmosphere
5. Produce 4-20 mA analog signal, that is linear to measured parameter
6. A sunshield shall be provided for control panels located outdoors.
7. Calibration: All instruments shall be factory-calibrated and calibrated by a qualified manufacturer's representative in the field.
8. Rated for Class I, Division I or Class I, Division 2 for explosive atmospheres per NFPA 820.

B. Residual Chlorine: shall be provided to sample chlorine residual as appropriate for controlling chlorine residual and shall be:

1. Amperometric or colorimetric type for measuring total residual chlorine or free residual chlorine as needed for the process
2. Designed for 30 days of continuous, unattended operation
3. Performance requirements:
   a) Measuring range: 0 to 5 mg/L free or total residual, as required
   b) Accuracy: ±5 percent of reading or ±0.035 mg/L
   c) Repeatability: ±5 percent or 0.005 mg/L.
4. See COS Preferred Equipment List.

C. pH Analyzers: Shall be provided to measure pH and shall be:

1. Potentiometric measurement probe type
2. Automatic temperature compensation required
3. Performance requirements:
   a) Measuring range: 2 to 12 pH units, as required

b) Accuracy: ± 0.01 pH
c) Stability: ± 0.01 pH/month
d) Repeatability: ± 0.01 pH

4. See COS Preferred Equipment List.

D. ORP Analyzers: Shall be provided to sample the Oxidation Reduction Potential (ORP) in solution and shall be:

1. Platinum or gold electrode type that generates voltage output relative to oxidizing or reducing conditions

2. Automatic temperature compensation required.

3. Performance requirements:
a) Measuring range: -1,500 mV to 1,500 mV
b) Accuracy: ± 1.0 mV
c) Stability: ± 1.0 mV/month
d) Repeatability: ± 1.0 mV.

4. See COS Preferred Equipment List.

E. Gas Analyzers: Shall be provided to sample for combustible and/or toxic gases as required to monitor for exposure limits, explosive limits, and time weighted concentration exposures for protection of personnel and environment. Gas analyzers shall be:

1. Electrochemical type sensor for toxic gas measurement

2. Catalytic bead or infrared-type sensor for combustible gas measurement

3. Capable of measuring range suitable to monitor concentrations to determine permissible exposure limit, maximum exposure limit, or lower explosive limit

4. Units shall be expressed in parts per million

5. See COS Preferred Equipment List.

F. Dissolved Oxygen (DO) Analyzers: Shall be provided to monitor DO for wastewater facilities and shall be:

1. Optical type that measures fluorescence or luminescence of a ruthenium or platinum-coated sensor

2. Self-calibrating

3. Temperature compensating

4. Performance requirements:
   a) Measuring range: 0 to 20 ppm
   b) Accuracy: 1 percent of full scale:
      1) Within 2 ppm for valves above 1 ppm
      2) Within .1 ppm for valves below 1 ppm.
   c) Repeatability: 0.1 ppm.

5. See COS Preferred Equipment List.

G. Total Suspended Solids (TSS) Analyzers: Shall be provided for process monitoring and control as needed and shall be:

1. LED light source type measurement type

2. Equipped with automatic air or water cleaning system

3. Temperature compensating

4. Performance requirements:
   a) Measuring range: Minimum 0 to 100 mg/L to maximum 0 to 30,000 mg/L
   b) Accuracy: ± 5 percent of reading
   c) Repeatability: 3 percent of reading.

5. See COS Preferred Equipment List.

H. Turbidity Analyzers: Shall be provided for process monitoring and control as needed and shall be:

1. Incandescent or LED type suitable for continuous monitoring.

2. Equipped with NEMA 4X operator interface that provides data logging up to 30 days and data transfer capability to SCADA.

3. Performance requirements:
   a) Measuring range: Low Range 0 to 10 nephelometric turbidity units (NTU), High Range 0 to 100 NTU
   b) Accuracy:
      1) ± 2 percent of reading or ± 0.020 NTU (whichever is greater) from 0 to 40 NTU
      2) ± 5 percent of reading from 40 to 100 NTU.
   c) Resolution: 0.001 NTU
   d) Repeatability: Better than ± 1.0 percent of reading or ± 0.002 NTU, whichever is greater
   e) Response Time:
      1) Initial response in 1 minute

2) 15 seconds with internal bubble trap.

4. See COS Preferred Equipment List.

I. Chlorine Gas Detection: shall be provided to monitor atmospheric chlorine gas and shall be:

1. Electrochemical sensor type measurement..

2. Performance requirements:
   a) Measuring range: 0 to 10 ppm
   b) Accuracy: ± 2 percent of full scale
   c) Repeatability: 1 percent of full scale or 2 ppm
   d) Response Time: Less than 20 seconds.

3. See COS Preferred Equipment List.

8.03 Flow Measurement

A. General: The Engineer is responsible to include flow measurement devices suitable for the process fluid, piping orientation for process monitoring, and control.

B. Mass and Flow Balance Considerations: Provide flowmeters for influent, effluent, and recycle flows as required in chapters for specific facilities in order to determine a complete mass or flow balance. This includes but is not limited to centrate, filter backwash, and other recycled streams.

C. Design Considerations: The Engineer shall consider the following factors when specifying flowmeters:

1. Concentration of suspended solids, temperature, and pH

2. Providing sufficient straight pipe runs upstream and downstream from the meter, as well as sufficient distance away from elbows, valves, and tees, which may vary depending on manufacturer

3. Appropriate vertical or horizontal piping orientation that provides full-pipe flow at all times for accurate measurement

4. Flow straightening vanes prior to the meter, which may reduce the required straight-run distance. The Engineer shall evaluate each flowmeter application on an individual basis.

D. Magnetic Flow Tube type flowmeters shall be:

1. Located above grade wherever feasible to avoid confined space entry

2. Provided with remote indication to shaded area or building where meter is located in buried or otherwise inaccessible location

3. Equipped with lining and electrodes compatible with liquid

4. Performance requirements:
   a) Measuring range: Suitable for measurement over the specified flow range
   b) Accuracy: ± 0.25 percent of flow rate reading from 10 to 100 percent full scale
   c) Repeatability: 0.25 percent of flow rate.

5. See COS Preferred Equipment List.

6. Equipped with transmitter with 4-20 mA analog output for flow rate and pulse output totalization.

7. Suitable for HART communication protocol.

E. Magnetic Insertion type flowmeters shall be:

1. Provided with remote indication to shaded area or building where meter is located in buried or otherwise inaccessible location

2. Insertion probe equipped with material compatible with liquid

3. Multipoint continuous averaging

4. Performance requirements:
   a) Measuring range: Suitable for measurement over the specified flow range
   b) Accuracy: ± 1.0 of flow rate reading
   c) Repeatability: 0.25 percent of flow rate.

5. Equipped with transmitter with 4-20 mA analog output for flow rate and programmable discrete outputs

6. See COS Preferred Equipment List.

F. Ultrasonic Doppler flowmeters shall be:

1. Wetted sensor type with Type 316 stainless steel mounting assembly

2. Capable of producing 4-20 mA DC signal that is linearly proportional to liquid flow rate

3. Equipped with programmable relay outputs for pump control, fault indication power down alarming, or remote totalizer driving

4. Performance requirements:
   a) Measuring range: Suitable for measurement over the specified flow range
   b) Accuracy: ± 1.0 of flow rate reading
   c) Repeatability: 0.25 percent of flow rate.

5. Suitable for HART communication protocol

6. See COS Preferred Equipment List.

G. Flow switches shall be:

1. Thermal switch type for liquids where suspended solids exceed 5 mg/L

2. Magnetic switch type for conductive fluids where suspended solids are less than 5 mg/L

3. Variable area piston type or vane type with local flow indication for pump seal water applications

4. Contacts shall be dry type, single-pole double throw and shall be rated a minimum 5 amperes at 120 VAC

5. Performance requirements:
   a) Measuring range: Suitable for measurement over the specified flow range
   b) Accuracy: 0.2 percent of setpoint velocity
   c) Repeatability: ± 0.5 percent of reading.

6. See COS Preferred Equipment List.

8.04 Level Measurement

A. General: Level measurement shall be provided as needed to monitor and control liquid levels in accordance with this section.

B. Ultrasonic Level Transducer / Transmitters shall be:

1. Non-contact ultrasonic level device for applications where reflective surfaces are relatively flat with the exception of dry chemicals, sloping surfaces, and areas subject to dust and splashing

2. Temperature compensating

3. Performance requirements:
   a) Measuring range: Suitable for measurement over the specified flow range
   b) Accuracy: ± 0.25 percent of range

c) Repeatability: ± 0.1 percent of range.

4. Two-wire transmitter type for measuring 0 to 20 feet range

5. Four-wire transmitter type for measuring levels range greater than 20 feet

6. Produce 4-20 mA analog signal that is linear to measured parameter

7. Suitable for HART communication protocol

8. See COS Preferred Equipment List.

C. Radar Level Transducer / Transmitters shall be:

1. Non-contact radar level device for applications where reflective surface conditions are foam, extreme dust, dry chemicals, and/or high pressure system.

2. Performance requirements:
   a) Measuring range: Suitable for measurement over the specified flow range
   b) Accuracy: ± 0.25 percent of range
   c) Repeatability: ± 0.1 percent of range.

3. Suitable for HART communication protocol

4. See COS Preferred Equipment List.

D. Level Switches:

1. Float type as follows:
   a) Mechanical switch encapsulated in waterproof floating device mounted in flexible waterproof PVC cable
   b) Contacts shall be dry type, single-pole double throw and shall be rated a minimum 5 amperes at 120 VAC.

2. Conductivity type as follows:
   a) Probe type conductivity level switches integrating a control relay, control and reference electrode probes
   b) Switch: The control relay senses the liquid level by conductance through electrode probes and the process liquid
   c) For probe lengths of 6 feet and less, provide 316 SS stainless steel rigid probes.

3. Admittance / Capacitance type as follows:
   a) Admittance / Capacitance type level switches shall be made up of a control relay, mechanically rigid, and rugged electrode probe and probe housing
   b) Switch: The control relay senses the liquid level by capacitance measurement between the electrode probe, the process liquid, and the equipment ground.

4. Contacts shall be dry type and shall be rated 5 amperes at 120 VAC.

5. See COS Preferred Equipment List.

8.05 Pressure Measurement

A. General: Pressure measurement shall be provided as needed to monitor and control process equipment and piping in accordance with this section.

B. Pressure Indicating Transmitters (PITs) shall be:

1. Designed such that process fluid is isolated from the sensing elements

2. Produce 4-20 mA analog signal that is linear to measured parameter

3. Suitable for HART communication protocol

4. Equipped with transmitters that have:
   a) Self-diagnostics and electronically adjustable span, zero, and damping
   b) Integral temperature compensation
   c) Over-range protection to maximum line pressure
   d) Type 316 stainless steel mounting brackets
   e) LCD digital indicator in units of psig.

5. Performance requirements:
   a) Measuring range: Suitable for measurement over the specified pressure range
   b) Reference Accuracy: Plus or minus 0.075 percent of calibrated span, including effects of hysteresis, nonlinearity, and repeatability
   c) Total Performance Accuracy: Plus or minus 0.30 percent of calibrated span, including reference accuracy effects, static pressure, and ambient temperature effects
   d) Stability: Plus or minus 0.15 percent of upper range limit over five years

6. See COS Preferred Equipment List.

C. Differential Pressure Level Transducer / Transmitters shall be:

1. Differential pressure device shall include a diaphragm-type pressure transducer and microprocessor-based transmitter for measurement of differential pressure.

2. Produce 4-20 mA analog signal that is linear to measured parameter

3. Performance requirements:
   a) Reference Accuracy: Plus or minus 0.075 percent of calibrated span, including effects of hysteresis, nonlinearity, and repeatability
   b) Total Performance Accuracy: Plus or minus 0.3 percent of calibrated span, including reference accuracy effects, static pressure, and ambient temperature effects
   c) Stability: Plus or minus 0.15 percent of upper range limit over 5 years.

4. Suitable for HART communication protocol

5. See COS Preferred Equipment List.

D. Submersible Pressure Transducer / Transmitters for level shall be:

1. Hydrostatic level sensor with 2-wire transducer / integral transmitter

2. Produce 4-20 mA analog signal that is linear to measured parameter

3. Sensor housing shall be 316L stainless steel with ceramic diaphragm.

4. Performance requirements:
   a) Measuring range: Suitable for measurement over the specified flow range
   b) Accuracy: ± 0.3 percent of range
   c) Repeatability: ± 0.25 percent of range.

5. See COS Preferred Equipment List.

E. Pressure switches shall be:

1. Mechanical diaphragm-sealed piston type

2. Capable of measuring pressure or vacuum within a range appropriate for application in units of inches water or psig

3. Designed to operate at 4 times nominal range without leakage or rupture

4. Fixed deadband for alarm conditions and adjustable deadband for monitoring or non-alarm conditions

5. Equipped with stainless steel components for all wetted materials

6. Performance requirements:
   a) Measuring range: Suitable for measurement over the specified pressure range.
   b) Accuracy: ± 1 percent of range
   c) Repeatability: ± 1 percent of range.

7. 'Snap-acting' - refers to the action of contacts in the switch element. These contacts open and close quickly and snap closed with sufficient pressure to firmly establish an electrical circuit. Snap action switches are good in applications where vibration is present.

8. Contacts shall be dry type and shall be rated 5 amperes at 120 VAC.

9. See COS Preferred Equipment List.

8.06 Temperature Measurement

A. General: Temperature measurement shall be provided as needed to monitor ambient temperature as well as for control of process equipment and piping in accordance with this section.

B. Temperature gauges shall be:

1. Bimetallic, gas-filled, or liquid-filled type

2. Designed with stainless steel components where exposed to process fluid or designed to avoid contact with a thermowell

3. Produce 4-20 mA analog signal that is linear to measured parameter

4. Performance requirements:
   a) Measuring range: Suitable for measurement over the specified temperature range
   b) Accuracy: ± 1 percent of adjustable range span.

5. See COS Preferred Equipment List.

C. Temperature switches shall be:

1. Sealed bulb and capillary type

2. Designed to prevent contact with bulb fluid from process fluid or ambient air measured

3. Open or close one or more sets of contacts when the sensed temperature increases or decreases to the switch setpoint

4. Contacts shall be dry type and shall be rated 5 amperes at 120 VAC

5. Mercury components are not allowed

6. Performance requirements:
   a) Measuring range: Suitable for measurement over the specified temperature range.
   b) Accuracy: ± 1 percent of adjustable range span.
   c) Deadband: Minimum of 1 percent of adjustable range span.

7. See COS Preferred Equipment List.

D. Resistance Temperature Detectors (RTDs): Shall be provided to protect motors larger than 100 HP and shall be:

1. 100-ohm, 3-wire or 4-wire, hermetically sealed, platinum type

2. Produce 4-20 mA analog signal that is linear to measured parameter

3. Suitable for HART communication protocol

4. Performance requirements:
   a) Measuring range: Suitable for measurement over the specified temperature range
   b) Accuracy: ± 0.2 percent of adjustable range span.

5. See COS Preferred Equipment List.

8.07 Uninterruptible Power Supply (UPS)

A. An uninterruptible power supply (UPS) shall be provided to power communications, PLC, and critical instruments only. UPS shall be evaluated for emergency exhaust systems associated with chemical feed systems.

B. Each panel furnished with a programmable logic controller (PLC) shall have one UPS. The UPS shall be true double conversion, on-line unit with total harmonic distortion of less than 2.5 percent.

C. The UPS shall comply with IEEE Standard 519 with the point of common coupling defined as the panelboard feeding the UPS and be designed to provide battery backup power for a minimum of 2 hours under full load.

D. UPS shall have discrete outputs to the PLC indicating “UPS on battery power” and “UPS low battery.”

E. See COS Preferred Equipment List.

8.08 Programmable Logic Controllers (PLCs)

A. All PLCs and their components shall be based on single manufacturer and/or PLC manufacturer-approved hardware per the preferred vendor equipment list.

B. I/O Racks shall include sufficient I/O for the project with an additional 20 percent installed spare.

C. PLC Power Supply:

1. Input: 120 VAC.

D. PLC's Central Processing Unit (CPU):

1. Programming Languages: Relay Ladder and Function Block

2. Memory: Sufficient memory to implement the specified control functions for Simple to Complex Process Applications, plus 50 percent reserve capacity

3. Control Functions

4. Battery backed-up memory, with indicator showing the status of the battery

5. Memory card providing backup copy of all programming and control functions

6. See COS Preferred Equipment List.

E. Analog Inputs Module:

1. Input Signal Type: 4-20 mA DC or 1-5 VDC at 24 VDC

2. Resolution: Minimum 12-bit precision with the digital result entered into the processor

3. Individually-fused analog input module points with blown fuse indicator lights, mounted external of the module on the output terminal strip

4. See COS Preferred Equipment List.

F. Analog Outputs Module:

1. Output Signal Type: 4-20 mA DC or 1-5 VDC at 24 VDC

2. Resolution: Minimum 12-bit precision with the digital result entered into the processor

3. Each output individually isolated

4. See COS Preferred Equipment List.

G. Discrete Inputs Module:

1. Input Signal Type: 24 VDC or 120 VAC

2. LED indication status of each discrete input

3. Each input individually isolated

4. Input module points shall be individually fused with blown fuse indicator

5. See COS Preferred Equipment List.

H. Discrete Outputs Module:

1. Output Signal Type: 24 VDC outputs

2. Output Protection: Transient voltage suppression

3. For 120 VAC application: Interposing relays with minimum 10 A contact rating at 120 VAC on each output

4. LED indication status of each discrete output

5. See COS Preferred Equipment List.

I. Communication Module:

1. Serial: RS232/RS485 Selectable

2. Ethernet: Minimum RJ-45 Ethernet Port

3. See COS Preferred Equipment List.

J. PLC Development Software:

1. See COS Preferred Equipment List.

K. Human Machine Interface (HMI):

1. Display:
   a) Type: Color TFT LCD screen
   b) Resolution: 1024 x 768 pixels
   c) Size: Minimum 15.1 inches diagonal

d) Operator Input: Configurable touch screen
e) Screen shall be accessible without access into electrical cabinets.

2. Memory:
   a) Application: 128/128 MB Available Flash/ RAM.

3. CPU: Minimum 100 MHz

4. Communications: RS-232/485 or Ethernet

5. Manufacturer: See COS Preferred Equipment List

6. Access: HMI screen to be accessible independently, without access to electrical panels or components.

8.09 Supervisory Control and Data Acquisition (SCADA)

A. SCADA System Software:

1. HMI System - Wonderware Intouch Version 9.5 or greater

2. IO Driver – Wonderware IOServer

3. Data Archival System - Wonderware Historian

4. Remote Alarm Annunciation - Wonderware SCADAlarm Software

B. Minimum Computer Hardware:

1. Operator Workstation (Desktop):
   a) Chassis – Mini Tower
   b) Processor – Intel Core 2 Duo, 2.0 GHz
   c) Hard drive – SATA 200 Gbytes
   d) Memory - 2.0 Gbytes
   e) CD Drive – CD/DVD +R/+RW
   f) Monitor - 19-inch flat panel LCD, UXGA (1600 x 1200)
   g) Network Adapters - Integrated 10/100/1000 Gigabit Ethernet
   h) Other Ports - Four USB 2.0
   i) Keyboard - Standard Windows
   j) Mouse - USB, 2-button, optical, scroll
   k) Operating System – Microsoft Windows XP Professional.

2. Operator Workstation (Notebook):
   a) Chassis – Laptop
   b) Processor – Intel Core 2 Duo, 2.0 GHz
   c) Hard drive – 200 Gbytes
   d) Memory -2.0 Gbytes

e) CD Drive – CD/DVD +R/+RW
f) Monitor - 17-inch flat panel LCD, UXGA (1600 x 1200)
g) Network Adapters - Integrated 10/100/1000 Gigabit Ethernet
h) Other Ports - Four USB 2.0
i) Mouse - USB, 2-button, optical, scroll
j) Operating System – Microsoft Windows XP Professional.

3. Computer hardware requirements frequently change and as such, all computer hardware must be approved by the COS Information Technology (IT) Department.

C. Minimum Communication Hardware:

1. Radio:
   a) Power Input – 12 VDC
   b) Frequency - Unlicensed 900 MHz
   c) COM Ports – 1 Ethernet RJ-45 and 1 Serial RS-232
   d) Protocols – Capable of handling Modbus/TCP & Allen Bradley Ethernet/IP protocols
   e) Manufacturer Models:
      1) See COS Preferred Equipment List.

2. Ethernet Switch:
   a) Power Input – 24 VDC
   b) RJ-45 Ports – Minimum 5 ports, 10/100BaseT(X), auto negotiation speed, F/H duplex
   c) Fiber Ports - 100BaseFX ports (SC/ST connector)
   d) Output – Relay contact for power failure
   e) Manufacturer Models:
      1) See COS Preferred Equipment List.

3. Communications hardware requirements frequently change; as such, all communications hardware for COS network computers must be approved by the COS IT Department.

D. SCADA System Development Standards:

1. SCADA system shall provide the operator with plant-wide monitoring, control, alarming, and access to historical data (historical trending) both of the overall process and of each piece of equipment that is involved with the process.

2. Process area screens layout shall mimic the process diagram that it represents.

3. Operator screens shall be organized in a hierarchy structure scheme:
    a) Main Screen – Login and Security Access:
        1) Main Process Overview Graphics:
            (a) Process Graphics:
                i) Equipment Controls
                ii) Setpoint Controls
            (b) Process Graphics
            (c) Process Graphics
        2) Trend Screen:
            (d) Predefined Trends
            (e) Custom Trends
        3) Alarm Screen:
            (f) New and Unacknowledged Alarms
            (g) Acknowledged Alarms
        4) Reports:
            (h) Daily Report Setup
            (i) Weekly Report Setup.

4. Basic symbols and annotation sequences:
    a) Process equipments symbols shall at a minimum conform to the ISA 5.5 - Graphic Symbols for Process Displays.

5. Color Scheme:
    a) Pump Running / Valve Open - Red
    b) Pump Stopped / Valve Closed - Green
    c) Valve Traveling Open - Flashing Red
    d) Valve Traveling Closed - Flashing Green
    e) Equipment text in Local (In Hand) - Blue
    f) Equipment text in Remote (In Automatic) - White
    g) Alarm / Overload / Fault / Failed - Yellow.

6. Basic Tag Naming Convention:
    b) Tag names shall follow equipment device identification used in Process and Instrumentation Diagrams.

7. Basic alarming and paging:
    a) Identify priority alarms:
        1) Priority 1 – requires operator immediate attention
        2) Priority 2 – requires operator attention within several minutes
        3) Priority 3 – operational status (event only)
    b) Telephone voice and text paging system
    c) Internet email paging system (requires internet access server)

8. Historical event logging, data storage, and report:
   a) Historical Logging:
      1) Log all instrumentation values
      2) Log all alarm events
      3) Log all operator setpoint changes
   b) Data Storage:
      1) Capacity to store one year historical logs
   c) Reports Generation:
      1) Daily and Weekly reports on all ADEQ compliance data
      2) Compliance data to be determine.

9. SCADA Testing:
   a) All equipment device graphics, annotations sequences, security login, event logging, alarms, paging system, and report generation shall be demonstrated as part of the overall SCADA equipment checkout and acceptance process not covered elsewhere.

E. The Engineer shall contact the City to request the most recent SCADA Standards and Guidelines.

8.10 Process Control

A. General: Process and Instrumentation Diagrams (P&IDs): The Engineer shall develop detailed P&IDs for all facilities, which utilize analog and discrete instrumentation for operation and control of equipment.

B. P&IDs shall meet all ISA standard 5.1 and shall include the following at a minimum:

1. Schematics to represent left-to-right flow of all liquid and solids streams

2. Standard symbols for equipment, valves, instrumentation, and process streams

3. Standard symbols for discrete and analog signals and corresponding pushbuttons, toggle switches, displays, and lights

4. Interlocks and alarms.

C. P&ID Support Documents: Support documents shall be developed to provide a completed design that is constructible and biddable. Support documents shall be provided to the City in hard copy and electronic format and include the following:

1. PLC input and output point summary lists

2. Instrument summary list

3. Instrumentation index with tag numbers, setpoints, and ranges

4. Control strategies

5. Instrumentation detail drawings

6. Panel layout drawings

7. SCADA system communication block diagram.

D. PLC Input and Output Point Summary Lists: The Engineer shall compile a listing of all the required I/O points associated with the I&C system and in accordance with the following:

1. The tabulation shall list all points required to meet immediate and future process needs as separate entities.

2. I/O shall be in a logical order of the P&ID drawings referenced. Spare points shall not be annotated.

3. The I/O list shall include tag/loop number, process description, P&ID drawing reference, I/O type (analog, discrete, digital link), associated number, and a remarks column to present clarifications as needed (e.g., if a pulse input is required, future point required).

4. Each instrument and I/O summary shall be organized by PLC and shall include the following information:
   a) Tag number of I/O point
   b) Description of I/O point
   c) P&ID drawing number on which the I/O point is indicated
   d) Associated specification section
   e) I/O type (analog, discrete, digital link, etc.)
   f) Associated control panel number
   g) Applicable installation detail
   h) Applicable remarks or comments not covered elsewhere
   i) Total number of digital input, digital output, analog input, and analog output points associated with each PLC
   j) Data map with all registers and functions.

E. Instrumentation Summary List: The Engineer shall compile a listing of all required instruments. The instrument summaries shall list each instrument's tag and loop number, specification number, associated instrument panel name/number, I/O list (including tag and loop number, process description and P&ID drawing reference), installation detail number, instrument range,

instrument setpoints, trip points, NEMA rating, material requirements, and all other data needed to precisely define the instrument requirements. Presented in hardcopy and electronic format.

F. Control Strategies: The Engineer shall develop a control strategy for each piece of equipment and instrument loop that controls equipment and include as part of the Final Design phase. In addition, overall process control strategies, which interlock numerous individual control strategies to provide an efficient operator interface, shall also be prepared. Control and process strategies shall:

1. List all applicable inputs and outputs

2. Provide a general description of operation of the overall system(s) controlled by the PLC identifying each control loop and its integrated function within the overall system(s). Provide description of indication, alarming, trending, and control functions not shown on the P&IDs required for the operator interface for operation of each system.

3. Provide an explicit description of how each device in the control loop functions and its integrated function within the loop if there is more than one device within the loop. Provide description of indication, alarming, trending, and control functions not shown on the P&IDs required for the operator interface for operation of each device.

4. Describe monitoring, alarm, and control functions associated with Local, Remote-Auto, and Remote-Manual control. Local shall be defined as control and/or monitoring of a device in the field at the device. Remote-Auto and Remote-Manual are defined as control and/or monitoring of a device by the operator using the control system.

5. Describe in detail the sequence of operations required to start or stop a device under normal and abnormal conditions under Local, Remote-Auto, and Remote-Manual control. Describe all required interlocks and permissives both process and safety.

6. Describe what happens under abnormal conditions, such as a control system failure, including transmitter failure, abnormal process values, and loss of communication between PLCs and power failure. Describe recovery of the control system from abnormal conditions.

7. Describe emergency/power outage shutdown procedures.

8. Shall identify all process trip points, set points, and timers required by a control loop.

9. Be annotated using the instrument and equipment tag numbers shown on the P&IDs and a P&ID reference will be provided.

10. Allow for documentation to be presented in hardcopy and electronic format.

G. Instrumentation Detail Drawings: The Engineer shall provide installation details of all instruments.

H. Panel Layout Drawings: The Engineer shall develop panel layout detail drawings, which are required for control panels. Each face-mounted device shall show a reference number, which is coordinated with the instrument and I/O summary. Front-view drawings shall show maximum cabinet dimensions, with minimal detail dimensions because the specific equipment dimensions and clearances are not generally known during design. Nameplate and Operator Interface Schedules will be shown on the drawings.

1. Control Panels: Control panels shall be installed in enclosures that are environmentally suitable for the area. Lens covers for indicating lights on all control panels will be colored as determined by the City.

2. Control Panel Spare Capacity: In addition to meeting present needs, all control panels shall have a spare capacity (e.g., I/O cards, memory, panel size, terminations, power supplies, and cable management) of 20 percent above total design capacity to be allocated for future needs. All control panels which are designed to accommodate future expansion will be provided with blank plates to cover cutouts.

3. Light Standards: Provide lights and indicators in accordance with the following COS standard colors:
   a) RUN or OPEN, red.
   b) STOPPED or CLOSED, green.

I. SCADA System Communication Block Diagram: The Engineer shall provide a SCADA System Communication Block Diagram that details the telemetry of a new system and describes how a new facility ties into the existing SCADA system.

J. The Engineer shall also follow these criteria:

1. Field Instrumentation: All field instruments shall be of the latest proven design and manufacturing. Each instrument shall have a history of successful use in its specified application. If the failure of any single field instrument could jeopardize the continuous operation of the process,

redundant instruments shall be designed for a fault-tolerant configuration. Analog signals shall be 4 to 20 mA.

2. Controllers, instruments, and control panels shall be designed to accommodate all design loads, immediate and future. The Engineer shall allocate all required space and resources needed to support the installation of equipment and control panels. All instrument ranges will be scaled in English units to the measured variable of the process.

8.11 Controls and Instrumentation Start-Up

A. The Contractor's CSI shall provide and submit a testing and start-up plan for approval by the Engineer prior to the commencement of work.

B. Prior to Start-Up:

1. The Contractor's CSI and its instrument suppliers to prepare and submit loop diagrams conforming to ISA 5.4. The Contractor shall provide loop diagrams conforming to the expanded format of ISA 5.4 for all loops. The loop diagrams shall incorporate all instruments and all loops associated with the I&C system.

2. Remove shipping stops from instruments before starting with procedures specified.

3. Contractor's CSI shall provide instruction manuals.

4. Install temporary testing components as required, furnished separately.

5. Verify nameplate data with respect to conditions of range, operating temperature, specific gravity, and components as stated on unit specifications. Discrepancies shall be immediately called to attention of the City and report of its condition confirmed in writing.

C. Start-up responsibilities:

1. Verify instrument installation in conformance with manufacturer's recommendations.

2. Follow manufacturer's recommendations for calibrating control system components including instruments, switches, valves, etc.

3. Calibrate instruments individually and where applicable, as a system (i.e., transmitter, controller, and control valve).

4. Verify control system components calibration meets published accuracies over full operational range.

5. Defective equipment: If any instruments cannot be properly adjusted or do not meet manufacturer's specifications, immediately call to attention of the City and report its condition confirmed in writing. Repair or replace equipment furnished as part of the contract documents.

6. Calibration of supplementary supply and output pressure gauges contained on instruments will not be required. If the gauge is found to be faulty, follow the requirements of the troubleshooting section of the manufacturer's maintenance and operation manual.

7. Complete data sheets of all instruments shall be prepared and submitted to conform with the ISA S20.

8. Complete calibration report form for each instrument and control device and include with applicable O&M manual.

9. Calibration stickers: Upon successful calibration, affix calibration sticker to instrument or control component. Calibration sticker shall contain equipment identification number, calibrated range or switch set and reset conditions, date of calibration, due date for next calibration, and name of person performing calibration.

10. Check instrument and control wiring for proper operation.

11. After energizing and prior to start-up, check control circuits and programs for proper sequence of operations and interlocking functions.

12. Correct any wiring changes required as a result of checks, including properly changing terminal strip and/or wiring markers and associated documentation including schematics and termination diagrams.

D. Test procedures:

1. Analog devices: Include 9-point span test (0 percent, 25 percent increasing, 50 percent increasing, 75 percent increasing, 100 percent, 75 percent deceasing, 50 percent decreasing, 25 percent decreasing, 0 percent) verifying linearity and hysteresis meets specified values.

2. Discrete devices: Use multiple state changes to verify set point, reset point and deadband.

E. Acceptable calibration standards:

1. Vacuum or draft:
   a) 0-inch to 5-inch w.c.: Inclined water-filled manometer graduated in hundredths of inches of water

b) 5-inch to 25-inch Hg: Mercury manometer graduated in tenths of inches of mercury
c) 5-inch to 60-inch w.c.: Water manometer graduated in tenths of inches of water
d) Electronic: Digital manometer, ±0.25 percent full scale accuracy, 3.5-digit LCD display, ranges of 0 to 19.99-inch w.c. and 0 to 199.9-inch w.c., ±1 percent LSD

2. Pressure:
   a) 0-inch to 5-inch w.c.: Inclined water-filled manometer graduated in hundredths of inches of water
   b) 5-inch to 60-inch w.c.: Water manometer graduated to tenths of inches of water
   c) 3 to 25 psig: Mercury manometer graduated to tenths of a psi
   d) 25 to 150 psig: Precision pressure gauge, 0-160 psi, 1/4 of 1 percent accuracy, 8-1/2 inch dial minimum
   e) 150 to 750 psig: Precision pressure gauge, 0-800 psi, 1/2 of 1 percent accuracy, 8-1/2 inch dial minimum
   f) 750 to 2,750 psig: Precision pressure gauge, 0-3,000 psi, 1/2 of 1 percent accuracy, 8-1/2 inch dial minimum
   g) Electronic: Digital manometer, ±0.1 percent full scale accuracy, 3.5-digit display, ranges of 0 to 19.99 psig, 0 to 199.9 psig and 0 to 1,999 psig, ±1 LSD

3. Differential:
   a) 0-inch to 5-inch w.c.: Inclined water-filled manometer graduated in hundredths of inches of water
   b) 5-inch to 300-inch w.c.: Mercury manometer graduated in tenths of inches of water
   c) 5 to 25 psig: Mercury manometer graduated in tenths of a psi
   d) Above 25 psig: Use pressure gauges specified
   e) Electronic: Digital differential manometer, ±0.1 percent full scale accuracy, 5-digit LCD display, ranges of 0 to 200-inch w.c. and 0 to 2,000 w.c., ±1 LSD

4. Temperatures:
   a) -20 to 250 deg F: Laboratory thermometers of suitable range
   b) Other ranges: Use thermocouple and precision potentiometer
   c) Electronic: Digital thermometer, ±0.1 percent of reading accuracy, 4-digit LCD display, ±1 LSD

5. DC process signal calibrator: 2-wire transmitter simulator:
   a) 4-20 mA range: ±0.5 percent full scale accuracy, 4-digit LCD display, ±1 LSD

b) 10-50 mA range: ±0.06 percent full scale accuracy, 4.5-digit LCD display, ±1 LSD.

8.12 Calibration of Panel Mounted Instruments

A. Receiver instruments:

1. Perform 9-point span test (0 percent, 25 percent increasing, 50 percent increasing, 75 percent increasing, 100 percent, 75 percent decreasing, 50 percent decreasing, 25 percent decreasing, 0 percent) verifying linearity and hysteresis by impressing measured signal into input or signal connections on instrument.

B. Controllers (panel or control room mounted):

1. Check for proper operation and adjust in accordance with manufacturer's instructions. Vary process input signal and check output signal for direction.

2. Set initial proportional band, reset rate, and rate time as recommended by manufacturer. It may be necessary to determine the process dynamics in actual operation before settings can be made.

3. Control loops shall be observed for operability and conformance by impressing simulated input signal at primary element and checking response of final control element.

C. Integrators, ratio relays, etc.

1. Check in conformance to manufacturer's recommendations. Receiver integrators shall be calibrated for proper operation and multiplication factor by feeding maximum input signal for specified period of time with stopwatch.

2. Check conformance to manufacturer's recommendations. Ratio signals shall be simulated to check proper ratio settings and output.

D. Graphic panel:

1. If possible, trip each alarm actuator (field device) in sequence and observe graphics. Check "acknowledge" and "test" pushbuttons.

8.13 Instrumentation Specifications

A. The Engineer shall compile instrument specifications for each type of field and panel-mounted instrument to be provided as part of the Final Design Phase.

CHAPTER 9 HEATING, VENTILATION, AND AIR CONDITIONING (HVAC) SYSTEMS

9.01 General

A. The intent of this chapter is to provide guidelines for the design of heating, ventilation, and air conditioning (HVAC) systems, which includes heating, evaporative cooling, air condition and exhaust systems.

B. This chapter applies to all water and wastewater facilities where HVAC systems are required.

C. HVAC systems, ductwork, and accessories must be energy efficient and designed for a minimum service life of 20 years industrial grade equipment and ductwork.

D. All HVAC equipment and ductwork shall be designed to provide sufficient clearance for installation, operation, removal, and anticipated maintenance.

E. All materials shall be compatible with anticipated service conditions and resistant to corrosion per the requirements of Chapter 5.

F. All federal, state, and local codes and regulations indicated in Chapter 1 and in individual facility chapters apply to HVAC systems.

G. The U.S. Environmental Protection Agency (EPA) and currently adopted codes may have special requirements regarding equipment or materials used for the HVAC systems. The Engineer should be cognizant of these requirements and others, which may supersede general industry codes and standards.

H. The Engineer is required to address the following during the design phase:

1. Building insulation requirements.

2. Noise and vibration control mitigation measures.

3. Earthquake/seismic restraints for equipment, ductwork, and piping. Redundant equipment requirements and/or emergency electrical service.

4. Any equipment and piping containing liquids which may be subject to freezing must be provided with heat tracing located under the insulation and controlled by a thermostat.

5. Design temperature and humidity in pump station structures shall conform to ASHRAE 62.2 requirements.

6. Equipment selection shall include high efficiency units that minimize electrical energy usage and water consumption.

9.02 Concept Design Review (CDR) Phase

A. General: The HVAC systems for a project shall be summarized and presented in a CDR report. The report will be submitted to the COS for review and acceptance. The CDR shall include the following at a minimum:

1. Summary table of all HVAC equipment required.

2. Summary table of all HVAC equipment design criteria, which indicates the following:
   a) Maximum summer and minimum winter design temperatures.
   b) Design air changes per hour.

3. Description of accessories required for fire protection such as smoke detectors and fire dampers.

4. Summary of individual electrical loads with total connected electrical load.

5. Preliminary control descriptions with discussion on automatic and manual modes of operation.

9.03 Final Design Phase

A. General: The Engineer shall include final design drawings and specifications as part of the Final Design, which builds upon work completed during the CDR.

9.04 Energy Code Analysis

A. General: The Engineer shall perform an energy code analysis for all new, upgraded, or modified HVAC systems.

B. Energy Code Analysis requirements:

1. Utilize energy code analysis software as approved by the DOE and Maricopa County such as COMcheck™.

2. Include the following:
   a) Interior lighting loads.
   b) HVAC equipment.
   c) Building characteristics such as wall type, roof type, and insulation.

9.05 Motors

A. General: Motors shall comply with requirements of Chapter 7.

B. Motor Material: shall be cast iron with UL, FM, CSA, or NSF International approval required.

C. Motors greater than 2 horsepower shall be rated at 460 volts, 3-phase, 60 Hz. The COS reserves the right to modify this requirement depending upon the design and operation flexibility.

D. All rotation changes (phase reversal) shall be made at the motor and not at the MCC.

E. Motors shall not be loaded to use more than the rated horsepower with a minimum service factor of 1.15.

F. Motors located indoors shall be specified for minimum 50 degree Celsius ambient temperature as recommended by the motor manufacturer.

G. Motors located outdoors with sun shielding shall be specified for minimum 60 degree Celsius ambient temperature as recommended by the motor manufacturer.

9.06 Air Conditioning Systems:

A. Air condition systems are required for all occupied spaces such as control rooms and restrooms as well as electrical rooms where major electrical equipment is housed, such as motor control centers and VFDs.

B. Air conditioning equipment shall be packaged and comply with the following:

1. Located at ground level to avoid roof access for maintenance.

2. Compressors shall be hermetically sealed, high efficiency, reciprocating, or scroll type equipped with high-pressure relief.

3. Evaporator fan shall be direct or belt-driven centrifugal type, steel. Ball bearings shall be permanently sealed and lubricated.

4. A variable speed or two-speed evaporator fan shall be provided for evaporator fans that exceed 7.5 horsepower.

5. Condenser fan shall be propeller type, direct drive with aluminum blades, dynamically balanced. Ball bearings shall be permanently sealed and lubricated.

6. Induced draft blower shall be direct or belt drive, forward-curved centrifugal type statically and dynamically balanced. Material shall be steel with corrosion resistant finish.

7. Coils: Evaporator and condenser coils shall be seamless copper tubes with mechanically bonded aluminum plate fins.

8. Air conditioning equipment to have a minimum SEER rating of 14.

9. Manufactured as presented in the COS Preferred Equipment List.

C. Controls features shall include the following at a minimum:

1. Evaporator fan controls.

2. Motor contactors.

3. Power disconnect switch.

4. Electronic thermostat.

5. 5-minute compressor cycle delay.

6. Differential enthalpy economizer control.

7. Economizer capable of compressor operation while modulating to utilize up to 100 percent outdoor air for cooling when outdoor air and humidity are at set acceptable levels.

D. Safety features shall include the following at a minimum:

1. High-pressure switches.

2. Compressor over-temperature and overcurrent.

3. Loss of charge/low pressure switch.

4. Freeze stat on evaporator.

5. Lock out protection.

9.07 Evaporative Cooling Systems

A. Evaporative cooling systems shall be provided for all pump rooms, mechanical rooms, and other non-occupied spaces.

B. Evaporative cooler systems shall be either single stage or double stage with a water conservation type water spray control system. Evaporative cooler ductwork for the pump room shall be directed to discharge above pump motors. The following requirements also apply to evaporative cooling:

1. Located on roof or at ground level as determined by the COS Public Works Director.

2. The evaporative media shall be a rigid cross-fluted pad or cellulose material impregnated with anti-rot salts.

3. Each evaporative cooler shall be controlled by a separate thermostat designed to operate the unit to satisfy temperature set points inside the pump station.

4. Multi-stage units shall have multi-stage thermostats to control the stage separately.

5. All controls shall have phase fail relays to protect control circuits.

6. A reduced-pressure, principle backflow prevention assembly (RPPA) is required for supply potable water.

7. Provide power cleaners or ‘Dump Pump’ to automatically discard water after a specified number of hours.

8. Manufactured as presented in the COS Preferred Equipment List.

C. Exhaust Fans: Provide for the pump rooms, any chemical rooms, rest rooms, janitor rooms, and storage rooms. Exhaust fans shall be as follows: Where applicable, local exhaust systems shall be provided for the pump rooms, any chemical rooms, rest rooms, janitor rooms, and storage rooms.

1. Fan shall be a square, in-line centrifugal type with backward-inclined, non-overloading, aluminum wheel; statically and dynamically balanced.

2. The housing shall be square type with duct transitions to match fan supplied; galvanized steel or aluminum as scheduled, minimum 20 gauge panels with 10-gauge stiffeners and frame as required.

3. Fan shall be belt driven with the motor mounted on exterior of housing.

4. Provide an external NEMA 3R disconnect and junction box for field connection of electrical wires.

5. Finish shall be baked enamel on steel units, or Kynar on aluminum units.

6. Manufactured as presented in the COS Preferred Equipment List.

D. Louvers shall be provided for air intakes or discharges for pump rooms, chemical rooms, or generator rooms. Where ductwork is connected to the louver, provide a backdraft damper. Louvers shall be as follows:

1. Louver material shall be minimum 0.081-inch thick extruded or formed aluminum for frame and blades.

2. Frame shall be 6-inch deep, formed aluminum frame, with 0.100-inch nominal wall thickness.

3. Louver Barriers Grills: Provide welded steel grill at exterior louvers as follows:
   a) Comprised of 1/2-inch diameter vertical and horizontal bars spaced 6 inches on center.
   b) Grill shall be epoxy coated or hot-dipped galvanized in accordance with Chapter 5.
   c) Attach grill to masonry or concrete with Type 316 stainless steel tamperproof anchors.

4. Blades shall be 0.040-inch perforated aluminum interior surface; blades positioned at 45-degree angle and spaced approximately 6 inches center to center. Louver free area shall be 25 percent, minimum.

5. Pressure drop through the louver shall be a maximum 0.13 inches water column pressure drop at 1,000 feet per minute free area velocity for intake louvers.

6. Provide a 1/2-inch mesh, 19-gauge aluminum or Type 316 stainless steel bird screen with removable frame.

7. Finish shall be mill-baked enamel, epoxy, Kynar, Acrodize, prime coat, integral color, or clear anodize.

8. Louver shall have sound attenuation as follows:

Table 9.1 Louver Sound Attenuation
Water and Wastewater Guidelines
City of Surprise

Frequency (Hz)	Sound Attenuation (dB) at 6-inch Depth
63	8
125	8
250	10

Table 9.1 Louver Sound Attenuation
Water and Wastewater Guidelines
City of Surprise

Frequency (Hz)	Sound Attenuation (dB) at 6-inch Depth
500	12
1,000	19
2,000	24
4,000	24
8,000	24

9.08 Maintenance

A. General: All HVAC equipment shall be designed to provide adequate space for installation, operation, and maintenance.

B. Clearances around equipment shall be per the manufacturer's recommendation with an additional 12 inches. In addition:

1. Provide a local disconnect switch for maintenance.

2. Power cleaners or "Dump Pump" to automatically discard water after a specified number of hours shall be provided for all evaporative coolers.

C. Drainage: All HVAC equipment shall be designed such that condensate and spent water is routed to a nearby drain to a nearby drain connected to a sanitary sewer.

9.09 Heating Systems

A. General: Provide gas unit heaters or electric unit heaters as part of a complete and functional heating system.

B. Gas Unit Heaters:

1. Aluminum, non-surging fan type with fan guards, dynamically-balanced with permanently-lubricated ball bearings.

2. Seam welded aluminized steel tubes with minimum 18-gauge aluminized steel headers with non-prorated 10-year heat exchanger warranty.

3. Horizontal, adjustable louvers with stops to prevent full closure.

4. Burner orifices suitable for facility elevation.

5. Intermittent solid state ignition system with pilot burner comprised of stainless steel.

6. Flue pipes comprised of 16-gauge galvanized steel or stainless steel.

C. Electric Unit Systems:

1. Aluminum, non-surging fan type with fan guards, dynamically-balanced with permanently-lubricated ball bearings.

2. Fin-type, steel-plated heater elements with elements brazed to common fins designed for maximum strength and heat transfer.

3. Built-in magnetic contactors.

4. Individually adjustable outlet louvers.

5. Equipped with a ceiling mounting bracket.

D. Alternate Heating Systems: Heating equipment such as make-up air units, infrared heaters, and other types not described may be considered on a project specific basis and must be approved by the COS Public Works Director in the CDR Phase of design.

E. Provide multiple unit controller for heating system with contacts for thermostat operation for each heater.

F. All equipment manufacturers shall be as named in the COS Preferred Equipment List.

9.10 Ductwork

A. General: The Engineer is responsible for design of ductwork with associated supports, bracing, and joints in accordance with SMACNA standards.

B. Materials: Ductwork materials as well as associated supports, bracing, and fasteners shall be compatible with the anticipated environment. Acceptable ductwork materials include the following:

1. Aluminum alloy 3033 H14 in accordance with ASTM B 209.

2. Hand lay-up or filament would FRP comprised of:
   a) Resin system that utilizes corrosion resistant, fire retardant vinylester with Class I flame spread per ASTM E84.
   b) Exterior UV stabilizer applied to exterior coat of resin system for exterior service.

c) Reinforcement system that utilizes commercial grade corrosion-resistant borosilicate glass fiber with a surface finish and binder that is specifically recommended by the glass manufacturer for the specific resin system to be used.

3. Type 304 or Type 316 stainless steel.

C. Hangers and Supports: The Engineer is responsible for design of ductwork hangers, reinforcement, and supports, which shall conform to the following minimum requirements:

1. Include seismic design criteria per SMACNA Seismic Restraint Guidelines.

2. Hanger and support spacing shall not exceed 8-ft on center for ductwork with a cross-sectional dimension of 16-inches.

3. Hanger and support spacing shall not exceed 4-ft on center for ductwork with a cross-sectional dimension greater than 16-inches.

4. Provide hanger reinforcement that utilizes 1-1/2-inch x 1-1/2-inch x 1/8-inch angles for ductwork with a cross-sectional dimension greater than 16-inches.

5. All fasteners shall be Type 316 stainless steel.

D. Joints and Bends: Provide joints and bends where required and as follows:

1. Changes in Duct Size: Use uniformly tapering sections that do not taper more than 1 inch in 5 inches of run.

2. Bends: Design bends with inside radii equal to duct width or diameter, with exception of miter bends.

3. Duct Sleeves: Install duct sleeve 2 inches larger than duct size for concrete or masonry penetrations through ceilings, floors, and walls.

4. Flanged Joints: Provide closed-cell neoprene gaskets over full flange face at all flanged joints.

5. Flexible Connections: Install 1/4-inch neoprene flexible connections on all evaporative cooling, air handling, and air conditioning equipment.

E. Access Openings: Provide square access openings spaced every 15 feet, which are 2 inches less than duct size. Access openings shall include gasket, continuous hinge, and exterior latch.

9.11 Louvers and Dampeners

A. General: The Engineer is responsible for design of louvers and dampeners as part of the HVAC system.

B. Stationary louvers: Provide stationary louvers as required for a functional HVAC system and as follows:

1. Minimum frame depth of 4 inches with minimum thickness of 0.081 inches.

2. Blades comprised of minimum 0.081-inch thick extruded aluminum positioned at 45-degree angle and spaced no more than 6 inches on center.

C. Adjustable louvers: Provide adjustable louvers as required for a functional HVAC system and as follows:

1. Minimum frame depth of 4 inches with minimum thickness of 0.125 inches.

2. Blades comprised of minimum 0.125-inch thick extruded aluminum positioned at 45-degree angle when open and spaced no more than 6 inches on center.

3. Bearings and Axles: Provide stainless steel, FRP, or PTFE ball bearings and pivot pins or axle, depending on the anticipated service.

4. Motorized louvers: Provide 12 VAC single phase, UL-approved motor.

D. Security Features: Provide welded steel louver barriers grills for exterior louvers as follows:

1. Comprised of 1/2-inch diameter vertical and horizontal bars spaced 6 inches on center.

2. Grill shall be epoxy-coated or hot-dipped galvanized in accordance with Chapter 5.

3. Attach grill to masonry or concrete with Type 316 stainless steel tamperproof anchors.

9.12 HVAC Systems Testing and Balancing

A. General: All new or modified HVAC systems shall be independently tested, adjusted, and balanced.

B. Test, balance, and adjust all HVAC systems in accordance with either:

1. Associated Air Balance Council (AABC): National Standards for Field Measurements and Instrumentation, Total Systems Balance, Air Distribution-Hydronics System.

2. National Environmental Balancing Bureau (NEBB): Procedural Standards for Testing, Adjusting, and Balancing of Environmental Systems.

C. Complete all services under direction of AABC or NEBB certified supervisor.

D. Testing and balancing shall include but not be limited to thermostats, electronic controllers, pneumatic, electric or electronic heating, natural gas heating.

E. Testing, Adjusting, and Balancing Procedures: Include the following at a minimum:

1. Test, adjust, and balance separate complete heating, ventilating, and air conditioning systems.

2. Perform testing, adjusting, and balancing cycles until air flows meet acceptance criteria and determine all airflow balance in individual supply and exhaust grills.

3. Initial Testing comprised of measuring and recording flow, fan speed, and fan static pressures at fan inlet and outlet for each system with dampers, grills, orifices, and other variable flow devices in full-open position.

4. Subsequent Testing comprised of:
   a) Measuring and recording air volume discharged at each inlet and outlet and adjusting air inlets and outlets to design air volumes to within 0 to 5 percent over design values.
   b) Adjust fan speeds and motor drives within drive limitations for required air volume.
   c) Measure flow and static pressures and adjust air supply and exhaust fan units to deliver 100 to 105 percent of the design air volume.
   d) Measure and record static air pressure conditions on fans, including filter and coil pressure drops, and total pressure across fan.
   e) Evaluate building and room pressure conditions to determine adequate supply and return air conditions.

f) Evaluate space and zone temperature of conditions to determine adequate performance of the systems to maintain temperatures without draft.
g) Permanently mark final balance positions of balancing dampers.
h) Measure amperage draw of fan and pump motors for final balance.

9.13 Support Systems

A. Backflow Prevention: Provide approved backflow protection devices to avoid potential contamination. If the backflow prevention device is mounted adjacent to a wall, it shall be mounted a minimum of 24 inches away and no greater than 3 feet high to allow for maintenance. Provide backflow prevention for the following water sources:

1. Potable Water.

2. Reclaimed Water.

B. Drain Systems: Provide floor drains, hub drains, floor sinks for drainage of air relief valves, seal water, condensate, and housekeeping as follows:

1. Gravity drains shall be sloped at a minimum of 0.007 ft/ft.

2. Drain piping shall be PVC or cast iron pipe with a slope of at least 1 percent.

3. Provide cleanouts and vents in accordance with currently adopted plumbing code.

4. Discharge to sanitary sewer in a manner that is compliant with currently adopted codes.

5. Sump pumps, where required, shall be duplex type submersible and equipped with the following:
   a) Ductile iron or PVC discharge piping,
   b) Type 316 stainless steel lifting chain,
   c) Discharge check valve,
   d) Float level controls,
   e) High water level alarm will annunciate to SCADA,
   f) Aluminum grating or treadplate cover,

C. Freeze Protection: Provide heat tracing and insulation for water piping less than 4 inches in diameter and/or chemical piping located outdoors that is subject to freezing temperatures in accordance with the following:

1. Heat Tracing: Suitable for 120 VAC/60 Hz/1 Ph power, equipped with a controller and designed to maintain the desired temperature for a useful life of 20 years. Heat tracing shall be in accordance with IEEE P515 - Testing, Design, Installation, and Maintenance of Electrical Resistance Heat Tracing for Industrial Applications and IEEE 622 - Design & Installation, of Electric Heat Tracing.

2. Pipe Insulation: Closed cell, elastomeric foam insulation suitable for temperatures of 0 degrees Fahrenheit to 220 degrees Fahrenheit. Provide UV resistant.

D. Other Support Systems: Systems not specifically addressed herein such as restroom facilities and compressed air system will be evaluated by the COS on a project-specific basis.

9.14 Fire Protection

A. Fire protection measures shall be coordinated with design of HVAC systems and designed in accordance with COS, IBC, and IFC requirements.

B. Fire alarm system design shall be coordinated with HVAC systems with smoke detectors for all occupied spaces annunciating to SCADA.

9.15 Electrical Systems

A. Electrical systems shall be designed in accordance with the requirements of Chapter 7.

B. All electrical equipment associated with HVAC system shall be UL listed, shall conform to NEMA standards, and shall conform to the project Technical Specifications.

C. Provide sufficient clearance for all electrical equipment, electrical panels, and control panels per NEC and OSHA requirements.

D. Provide local disconnects for all equipment and control panels to de-energize for maintenance.

9.16 Instrumentation and Control

A. Instrumentation shall meet the requirements of Chapter 8, which includes switches, level measurement, and pressure measurement.

B. Annunciate RUN status and OFF status for all HVAC equipment to SCADA.

City of Surprise

Water Facility Guidelines
Volume 2 of 3

Public Works Department

April 2011

FINAL

4600 East Washington, Suite 500 • Phoenix, Arizona 85034 • P. 602.263.9500 • F. 602.265.1422

City of Surprise

Water Facility Guidelines

Volume 2 of 3

TABLE OF CONTENTS

Page No.

CHAPTER 10 ON-SITE WATER PIPING AND POTABLE WATER TRANSMISSION PIPELINES

10.01 General 10-1
10.02 Concept Design Review (CDR) Phase 10-1
10.03 Agency and Utility Coordination 10-3
10.04 Final Design Phase 10-6
10.05 Design of Pipeline Systems 10-7
10.06 Fittings and Appurtenances 10-8
10.07 Pipe Joints 10-9
10.08 Trench Design 10-10
10.09 Trenchless Technologies 10-11
10.10 Steel Pipe Design 10-12
10.11 Ductile Iron Pipeline Design 10-18
10.12 Protective Coatings and Linings 10-20
10.13 Isolation Valves 10-21
10.14 Appurtenances and Structures 10-22
10.15 Disinfection 10-27

CHAPTER 11 WATER PUMP STATIONS

11.01 General 11-1
11.02 Definitions 11-1
11.03 Concept Design Review (CDR) Phase 11-1
11.04 Agency and Utility Coordination 11-4
11.05 Final Design Phase 11-4
11.06 Hydraulic Analysis 11-4
11.07 Surge Analysis 11-5
11.08 Surge Mitigation Measures 11-6
11.09 Vault Standards for Water Pump Stations 11-8
11.10 Flow Measurement 11-9
11.11 General Structural Design Loads 11-9
11.12 Architecture and Landscaping 11-11
11.13 Pump Systems Design 11-12
11.14 Pump Speed Control 11-15
11.15 Pump Station Piping and Valves 11-16
11.16 Pump Motors 11-19
11.17 Vertical Turbine Pumps 11-21
11.18 Horizontal, Split-Case Pumps 11-23
11.19 Vibration 11-24

11.20 Heating, Ventilation, Air Conditioning (HVAC) 11-26
11.21 Signage 11-26
11.22 Access Gates 11-26
11.23 Security 11-26
11.24 Noise Attenuation 11-27
11.25 Support Systems 11-28
11.26 Fire Protection 11-30
11.27 Chlorination Provisions 11-30
11.28 Analog Instrument Provisions 11-32
11.29 Electrical Systems 11-32
11.30 Instrumentation and Control 11-33

CHAPTER 12 PRESSURE REDUCING STATIONS
12.01 General 12-1
12.02 Site Considerations 12-1
12.03 Concept Design Review (CDR) Phase 12-2
12.04 Agency and Utility Coordination 12-3
12.05 Final Design Phase 12-3
12.06 Hydraulic Analysis 12-4
12.07 Structural Design 12-5
12.08 Corrosion Control 12-7
12.09 Drainage Sump 12-7
12.10 Valves 12-7
12.11 Piping 12-11
12.12 Ventilation 12-12
12.13 Support Systems 12-12
12.14 Electrical Systems 12-13
12.15 Instrumentation and Control 12-14

CHAPTER 13 WATER STORAGE RESERVOIRS
13.01 General 13-1
13.02 Site Considerations 13-1
13.03 Concept Design Review (CDR) Phase 13-2
13.04 Agency and Utility Coordination 13-3
13.05 Final Design Phase 13-4
13.06 Volume Criteria 13-5
13.07 General Design Requirements 13-5
13.08 Concrete Reservoir Design 13-8
13.09 Steel Tank Design 13-12
13.10 Water Quality Provisions 13-18
13.11 Electrical Systems 13-19
13.12 Instrumentation and Control 13-20
13.13 Landscaping 13-21

CHAPTER 14 WATER PRODUCTION WELLS
14.01 General 14-1
14.02 General Design and Construction Procedure for Water Production Wells.. 14-3
14.03 Concept Design Review (CDR) Phase 14-5
14.04 Agency and Utility Coordination 14-7
14.05 Final Design Phase 14-7
14.06 Water Production Well Equipment 14-10

14.07 Support Systems 14-15
14.08 Electrical Systems 14-16
14.09 Instrumentation and Control 14-17
14.10 Basic Control Descriptions 14-18

LIST OF TABLES

Table 10.1 Maximum Allowable Hoop Stress for Welded Steel Pipeline 10-13
Table 10.2 Maximum Allowable Combined Stress for Welded Steel Pipeline 10-16
Table 10.3 Allowances for Casting Tolerance 10-19

LIST OF FIGURES

Figure 10.1 Drain Valve Assembly 10-28
Figure 11.1 Surge Tank Details 11-35
Figure 11.2A Pump Station Mechanical Plan 11-36
Figure 11.2B Pump Station Mechanical Plan Pump Layout 11-37
Figure 11.2C Pump Section 11-38
Figure 11.2D Pump Station Mechanical Plan Vertical Pump Layout 11-39
Figure 11.2E Pump Station Vertical Pump Layout Enlarged Plan 11-40
Figure 11.2F Pump Station Vertical Pump Layout Section 11-41
Figure 12.1 Pressure Reducing Station (PRS) Details 12-15
Figure 13.1 Water Storage Tank Inlet Pipe 13-22
Figure 13.2A Water Storage Tank Exterior Cage Detail 13-23
Figure 13.2B Water Storage Exterior Ladder Detail 13-24
Figure 13.2C Water Storage Tank Top Platform Detail 13-25
Figure 13.3 Water Storage Tank Roof Manhole 13-26
Figure 13.4 Water Storage Tank Overflow Pipe Detail 13-27
Figure 13.5 Water Storage Tank Shell Manway 13-28
Figure 14.1 Typical Production Well 14-19
Figure 14.2 Production Well Site Plan 14-20
Figure 14.3 Well Head Detail 14-21
Figure 14.4 Splash Box Detail 14-22
Figure 14.5 Acoustic Enclosure 14-23

LIST OF APPENDICES

Appendix A – Well Technical Specifications
Appendix B – Hydrogeologic Scope of Work
Appendix C – Well Completion Report Outline

CHAPTER 10 ON-SITE WATER PIPING AND POTABLE WATER TRANSMISSION PIPELINES

10.01 General

A. This chapter outlines the requirements for the CDR Phase and the Final Design Phase of all on-site water piping as well as all potable water transmission pipelines having a minimum diameter greater than 16 inches. Transmission pipelines serve as a means of conveyance of potable water from the booster pump station to the distribution system.

B. Well water transmission pipelines and potable water distribution pipelines that are located in public rights-of-way and having a maximum diameter of 16 inches shall be furnished and installed in accordance with the COS EDS.

C. In addition, this chapter presents the standards that shall be followed in the design and construction of water transmission pipelines.

10.02 Concept Design Review (CDR) Phase

A. General: The CDR phase of the project shall be presented in a CDR, which shall be submitted to the City for review and approval. The CDR is the basis for the subsequent design process and must therefore provide a thorough description of the project.

B. Waiver of CDR Requirements: The City reserves the right to consider a waiver on portions of the CDR requirements described below for water transmission pipelines that are low in complexity and/or do not involve significant evaluations of alternatives or alignments in accordance with Chapter 1, Section 1.02.

C. CDR: The CDR shall include, but not be limited to, the general CDR requirements noted in Chapter 1 of these Standards and Guidelines, and the following additional items:

1. Executive Summary.

2. Table of Contents.

3. Existing conditions.

4. Summary of utility conflict information, including pothole information or recommendations for utilities locations (Chapter 2).

5. Topographic mapping information summary (Chapter 2).

6. Draft Geotechnical Investigation Report (Chapter 3).
7. Draft Environmental Investigation Report (Chapter 1).
8. Summary/overview of the applicable drainage and traffic study findings with references to those documents submitted separately.
9. Preliminary plans and centerline profiles (30 percent design drawings) illustrating the recommended pipeline alignment and profile, facility plan views, proposed site plans and improvements, any offsite improvements, appropriate sections, elevations and details, existing topography, adjacent and underlying property ownership, ROW/easements, etc.
10. Alternative alignments studied and recommended alignment.
11. Recommendations for connections to existing facilities, as well as future connection(s) and tee locations.
12. Recommendations regarding pipeline design parameters and materials.
13. Identification of appurtenant facilities and spacing criteria.
14. Recommendations for bidding packages, scheduling, contractor staging, construction sequencing, and impacts to public areas and other stakeholders.
15. Identification of any permanent and temporary ROW/easement constraints and acquisition needs.
16. Design calculations including thrust restraint, pipe thickness design, and air-valve calculations.
17. Matrix summary of permits to be obtained.
18. List of agencies and utilities to review and sign the drawings.
19. Outline of technical specification sections and preliminary list of final design drawings.
20. Preliminary quantities and associated cost estimates.
21. Preliminary construction schedule.
22. Project correspondence file, including meeting minutes.

23. Inventory of existing facilities and improvements.

24. Graphics, detail sketches, tables, and other displays to support analysis and recommendations.

25. List of relevant reports, plans and maps reviewed, and other relevant project information.

26. Work plan for how construction is to be accomplished if connecting into existing facilities (phasing, shutdowns, disinfection, pressure testing, etc.).

27. Preliminary corrosion mitigation analysis and design (Chapter 5).

10.03 Agency and Utility Coordination

A. The Engineer shall initiate contact and coordinate efforts with outside utilities and agencies in accordance with Chapter 1.

B. Existing Utilities:

1. It is the responsibility of the Engineer to coordinate with all utility entities during design to accurately identify and locate all existing utilities in the project area.

2. All existing and proposed public and private utilities shall be presented on plan and profile drawings. See respective sections in this chapter for Blue Stake and potholing requirements. Examples of utilities include but are not limited to well water, potable water, reclaimed water, irrigation, wastewater collection, storm water collection, gas, petroleum, electric power, communication, fiber optic, and traffic control.

C. Record Drawings of Existing Utilities:

1. It is the Engineer's responsibility to obtain all available utility maps and as-built drawings from utility companies when infrastructure crosses or parallels a proposed City pipeline.

D. Field Verification of Utilities:

1. It is necessary to perform a field reconnaissance to locate existing utilities along the proposed pipeline alignment. Usually this is done with the field survey or walk through completed as part of the CDR. The location of the existing utilities shall be compared with the locations recorded on utility drawings and utility maps. If discrepancies exist between utility drawings and field data, the

particular utility or entity shall be contacted to resolve the discrepancy. Any Blue Stake markings or future facility markings should be field located and included on the plans.

E. Blue Stake:

1. Blue Stake shall be contacted at least 48 hours prior to digging at 602-263-1100 or 811. Water-soluble white paint shall be used to mark the project area for the various Blue Stake member agencies.

2. The potholing or geotechnical boring companies shall be responsible for contacting Blue Stake directly and shall provide Blue Stake with the street address, cross streets, city, and county to identify the location of the work. In open country, USGS coordinates shall be provided unless Blue Stake requests another form of location information. The construction contractor shall be responsible for contacting Blue Stake during construction of the project.

F. Potholing:

1. All utility crossings or close utility interference shall be located and exposed by digging test pits (potholes). The design survey shall record the size, nature, and location of the potential crossing by station, offset, and elevation.

2. The number of potholes required shall be sufficient to determine the alignment and grade of the utility.

3. Use of “Soft Dig” (vacuum extraction) technologies is encouraged to minimize the amount of soil disturbed during the potholing process. Many utility companies utilize this technology, for the risk of damaging the utility is low.

4. Any disturbance to pavement, roads, or soil during potholing work shall be fully restored in accordance with the COS EDS.

5. Any repairs or damages caused by potholing shall be the responsibility of the potholing contractor.

6. The Engineer shall be responsible for coordinating the potholing effort. The pothole contractor shall be required to obtain all permits related to their work.

G. Separation Requirements:

1. Minimum separation distances shall be maintained around all utilities, in accordance with ADEQ and MCESD requirements and the minimum separation requirements of the affected utility entity. The Engineer is responsible for obtaining the separation requirements from each utility, and for maintaining the necessary clearances for the pipeline.

2. Separation for overhead utilities shall be as required by the affected utility entity.

3. Horizontal and vertical separation of wastewater collection lines, reclaimed water pipelines, and storm drains from potable water facilities must comply with the current ADEQ and MCESD requirements, as reflected in MAG Standard Detail 404.

H. Utility Relocations:

1. Utility relocations may include but are not limited to existing communications cable, utility power, wastewater collection, natural gas, or petroleum.

2. If the relocation of an existing utility is necessary, an evaluation of the feasibility of moving an existing utility shall be conducted and relocation alternatives shall be developed with the utility owner.

3. The utility owner shall be presented with the alternatives developed for utility relocation. If all issues are addressed and the utility owner is agreeable to relocating the utility, the utility owner shall determine if they will design the relocation or if the Engineer will proceed with the relocation design.

4. The drawings for relocating utilities shall be included in the contract documents, unless the utility owner chooses to relocate its own utility.

5. For relocation of existing pipelines, the Engineer shall determine a new alignment, the new high or low points, and if air/vacuum valves and/or blowoff assemblies are needed.

6. Once a decision is made to relocate an existing utility and the preferred alignment is set, provisions shall be included in the contract documents for uninterrupted service during construction, unless otherwise allowed by the utility owner.

10.04 Final Design Phase

A. General: The Final Design Phase of the project must combine all the elements presented in the previous phases into detailed design drawings and specifications needed to bid and construct the project. Progress submittals to the COS are required at 60 percent and 90 percent level of completion in accordance with Chapter 1. For pipeline projects, the CDR, with its preliminary plans and centerline profiles, usually serves as the 30 percent design submittal, and the Final Design requires progress review submittals at the 60 percent, 90 percent, and 100 percent completion levels.

B. Final Design Drawings: The Final Design Drawings must include, but are not limited to:

1. Cover Page.
2. Sheet Index.
3. Utility signatures.
4. Final Geotechnical Report.
5. Final Environmental Investigation Report.
6. Design Drawings and details for each discipline (i.e., Land Surveying, Civil, Structural, Mechanical, and Electrical).
7. Contract documents shall be wet stamped and signed according to Arizona Revised Statutes.
8. Plans and profiles.
9. Existing topography, pothole, and utility information.

C. Final Design Specifications: The Final Design Specifications shall include, but not be limited to:

1. Cover Page.
2. Table of Contents.
3. Specification Sections for each design discipline (i.e., Civil, Structural, Mechanical, and Electrical).
4. Contract documents shall be wet stamped and signed according to Arizona Revised Statutes.

10.05 Design of Pipeline Systems

A. General: When considering design of a water transmission pipeline, the Engineer shall consider a number of factors including pumping costs, system demand, frictional losses, flow velocities, and turnover concerns early in the CDR Phase. Typically, transmission facilities are sized initially in the pump station CDR or presented in the IWMP.

B. Horizontal Pipe Alignment: Preliminary horizontal pipe alignment must be developed as part of the CDR. The following considerations shall be taken for the development of horizontal pipe alignment:

1. The preliminary pipe alignment must identify design and coordination issues such as utility conflicts (standard utility locations are noted in Chapter 3 of the COS EDS), constructability issues, environmental issues, permitting requirements, and easement/right-of-way needs.

2. The pipeline horizontal alignment shall maintain minimum separations from wastewater collection lines, storm drains, or reclaimed lines in accordance with ADEQ and MCESD requirements.

C. Vertical Pipe Alignment: Preliminary vertical pipe alignment must be developed as part of the CDR. The following considerations shall be used for the development of vertical pipe alignment:

1. The vertical alignment must conform with the following considerations:
   a) Pipeline material and fabrication.
   b) Potential interference with existing and future utilities.
   c) Safety.
   d) Geotechnical conditions.
   e) Permitting requirements.
   f) Construction requirements.
   g) Maintenance requirements.
   h) Minimize number of high points.

D. Plan and Profile Drawings: Plan and profile drawings shall include, but not be limited to:

1. Pipeline centerline stations.

2. Invert elevations at grade breaks and the matchlines of each sheet.

3. Pipe information table, i.e., wall thickness, pressure class, etc.

4. Pipe joint type and restraining requirements.

5. Pipe material.

6. Pipe lining and coating.

7. Pipeline horizontal curve data.

8. Pipeline appurtenances.

9. Easement limits with recording information.

10. Existing utility information including pothole information.

11. Existing City drawing numbers.

E. As-built drawings: As-built drawings shall be in accordance with Chapter 1. As-builts shall incorporate GPS coordinates and elevations as required by the City on structures, valves, fittings, and other pipeline appurtenances.

F. Pipe Materials: Material shall be:

1. Mortar Lined and Coated Welded Steel pipe conforming to ANSI/AWWA C200 for potable water transmission pipelines 24 inches diameter and larger.

2. Ductile Iron pipe conforming to ANSI/AWWA C151 for all onsite water piping and for potable water transmission pipelines larger than 16 inches diameter.

3. Well water transmission pipelines and potable water distribution pipelines sized 16 inches and smaller shall be furnished in accordance with the COS EDS.

10.06 Fittings and Appurtenances

A. Steel Fittings:

1. Steel fittings shall comply with ANSI/AWWA C208. Flanges located aboveground or in vaults shall comply with ANSI/AWWA C207. Flanges shall be selected in accordance with working pressure, test pressure, surge pressure, and the drilling pattern of the adjoining flange. In general, buried flanged applications will not be allowed.

2. Welded steel fittings shall be designed in accordance with standard practice as stated in AWWA M11 and other applicable industry standards. Bolt holes on flanges shall straddle the vertical centerline. Welded steel pipe elbows shall be as follows:
   a) 0 to 30 degrees – two piece
   b) 30 to 45 degrees – three piece

c) 45 to 60 degrees – four piece
d) 60 to 90 degrees – five piece

Outlets for blowoffs and air valves shall be as shown in the "Appurtenances and Structures" section of this chapter. Joints for fittings shall be welded or flanged.

3. Reinforcement and wall thickness of steel fittings shall conform to AWWA M11 and other applicable industry standards. Rating of flanges shall comply with ANSI/AWWA C207.

B. Ductile Iron Fittings:

1. Fittings shall be push-on or mechanical joint below grade and flanged above grade or in vaults. Push-on and mechanical joints shall be restrained on all onsite water piping, and where the design dictates for potable water transmission pipelines.

2. Ductile Iron fittings shall be furnished in accordance with ANSI/AWWA C110 or ANSI/AWWA C153. Ductile Iron fitting pressure ratings shall be as follows:
   a) Fittings 4 inch through 24 inch rated for 350 psi.
   b) Fittings 30 inch through 48 inch rated for 250 psi.
   c) Fittings 54 inch through 64 inch rated for 150 psi.

3. Fittings shall be in accordance with all applicable requirements of ANSI/AWWA C110/A21.10 or ANSI/AWWA C153/A21.53 with the exception of the manufacturer's proprietary design dimensions.

4. Joint components shall be in accordance with the requirements for push-on joints in ANSI/AWWA C111/A21.11.

5. Cement lining shall be either standard thickness cement lining or double thickness cement lining in accordance with ANSI/AWWA C104/A21.4.

10.07 Pipe Joints

A. Steel Pipe Joints:

1. Steel pipe joints shall be welded, flanged, grooved, or bell and spigot, depending on the pipe diameter, longitudinal force, flexibility requirements, the type of adjoining end, and the need to disassemble the joint.

2. Bell and spigot joint preparation shall be in accordance with ANSI/AWWA C200. Rubber gasketed joints may be considered for special design conditions, if a Request for Engineering Standards Modification is submitted by the Engineer in accordance with Chapter 1, Section 1.5 of the COS EDS.

3. Depending on the longitudinal force due to thrust and the effect of temperature, the large diameter transmission pipe joints may be lap welded or butt welded. The procedure for design of the joint to resist longitudinal forces is discussed in Chapter 8 of AWWA M11. Butt strap joints may be necessary on closure sections, or to connect to existing sections of the pipeline.

4. Expansion joints shall be designed as recommended by AWWA M11, Section 8.6

B. Ductile Iron Pipe Joints:

1. For direct bury applications, mechanical joint restrained systems are required unless otherwise approved by the City.

2. The ANSI/AWWA C111 standard applies to rubber gasketed joints for ductile iron pipe. Push-on joints may be used on straight pipe runs. Mechanical joints are required for all other applications.

3. The ANSI/AWWA C115 standard applies to flanged ductile iron pipe and fittings. Flanged fittings are only permitted in aboveground or in-vault installations, unless otherwise approved by the City.

10.08 Trench Design

A. Trench Width: The Engineer shall determine the appropriate trench width by considering the pipe diameter, depth of cover, type of material to be removed, the space required for installation of the pipe and operation of equipment, general construction practices, and guidelines presented in the following paragraphs:

1. The Engineer shall indicate that trench spoils shall be placed at a sufficient distance away from the edge of the trench to minimize trench collapse, and in accordance with the recommendations contained in the geotechnical report (Chapter 3).

2. The Engineer shall indicate that trench shoring be used to protect workers in accordance with local, state, and OSHA requirements.

3. The trench should be as wide as necessary for proper installation of the pipe and backfilling, and should provide adequate room to meet safety requirements for workers. A minimum clearance of 12 inches horizontally on both sides of the pipe as measured from the outer diameter (OD) shall be provided. Maximum horizontal clearances shall be based on design calculations. AWWA M41 Section 11.3 and AWWA M11 Chapter 13 requirements also apply to trenching, embedment, pipe installation, and backfilling. Laying conditions for ductile iron pipe are presented on Figure 11-6 of AWWA M41, and conditions for steel pipe are discussed in Chapter 12 of AWWA M-11.

4. The method and equipment used for excavating trenches will depend on the type of material to be excavated, the depth of the trench, and space available for trenching operations. The choice of method and equipment is typically left up to the contractor. The contractor should only use equipment capable of meeting trench width limitations. Provisions should be included in the contract specifications that require corrective measures to be used by the contractor if allowable trench widths are exceeded, except when safety requirements dictate a wider trench.

5. The Contractor shall ensure that trenches excavated during construction are the same configuration and width as indicated in the design. If trench excavations are not the same (e.g., sloped sides versus straight sides), the contract documents shall provide for verification that pipe wall design is adequate to meet loading requirements for the actual trench configuration.

B. Pipe Bedding and Backfill: Unless the recommendations of the Geotechnical Report (Chapter 3) specifically note otherwise, pipe bedding and backfill shall be performed in accordance with Chapter 6, Section 6.13 of the COS EDS.

10.09 Trenchless Technologies

A. General: The COS standard is open-cut trench installation; however, where open-cut trenches are not feasible, micro-tunneling, boring, and jacking will be considered on an individual basis.

B. General: The COS standard is open-cut trench for buried pipe installation; as such, the use of trenchless technologies must be justified by the Engineer during the CDR phase with a description of conflicts, site constraints, as well as economic constraints that indicate the need for trenchless technology.

C. Approval: The COS Public Works Director must issue written approval during the CDR for projects where trenchless technology is proposed.

D. Provide locations of proposed boring/jacking pits or micro-tunneling shafts with the CDR as well as a separate evaluation of trenchless technologies that includes the following:

1. Summary of regional geology with description of anticipated geological conditions.

2. Summary of existing utilities with vertical and horizontal locations of each.

3. High and low groundwater elevations and water quality data.

4. Evaluation of horizontal directional drilling, micro-tunneling, and conventional tunneling.

5. Evaluation of viable pipe materials, which is coordinated with requirements of Chapter 5.

6. Illustration of proposed vertical and horizontal alignment.

7. List of agencies and utilities with specific requirements, which include but are not limited to railroads, ADOT, APS, and CAP.

8. Summary of recommendations that include selected pipe material.

E. Jacking pits and micro-tunneling shaft locations, depths, and dimensions must be provided as part of Final Design documents.

10.10 Steel Pipe Design

A. General: The design of steel pipe must include external load, internal pressure, and surge pressure according to AWWA M11 standards.

1. External loads to be considered on a pipe include dead loads and live loads. Potential heavy construction loads shall also be considered, when necessary.

2. Groundwater: The pipe shall be designed to resist uplift from groundwater when such situations exist.

3. Vacuum Pressure: The pipe shall be designed to withstand anticipated vacuum pressures as determined by a surge analysis as described in AWWA M11.

4. Internal Pressure: Considerations for working pressure and field test pressure shall be as follows:
   a) Working Pressure: shall be determined from the maximum hydraulic grade line (HGL) the pipeline will see in operation. Pressure calculations shall reflect the difference in elevation between the HGL and the centerline of the pipe. See Table 10.1 for allowable hoop stresses for cement mortar or dielectrically coated steel pipe.
   b) Field Test Pressure:
      1) Field air pressure testing of all welded pipe joints and field hydrostatic pressure tests of the completed pipeline shall be conducted.
      2) The hydrostatic test pressure shall be equal to the maximum working plus surge pressure, the pump shutoff pressure (where applicable), or 1.25 times the maximum working pressure, whichever is greater. The hydrostatic test pressure shall not produce a hoop stress in the pipe wall exceeding that noted in Table 10.1. Valves (body and seat) shall not be subjected to test pressures greater than the manufacturer's recommendation. In some cases, this may require an increase in the valve pressure class.

Table 10.1 Maximum Allowable Hoop Stress for Welded Steel Pipeline
Water and Wastewater Guidelines
City of Surprise

Working Pressure		Test Pressure		Surge Pressure	
Mortar Coating	Dielectric Coating	Mortar Coating	Dielectric Coating	Mortar Coating	Dielectric Coating
50% of Yield	50% of Yield	62.5% of Yield	62.5% of Yield	66.7% of Yield	66.7% of Yield
16,500 psi maximum	21,000 psi maximum	20,625 psi maximum	26,250 psi maximum	22,000 psi maximum	28,000 psi maximum

5. Surge Pressure: The surge pressure shall be obtained from a surge analysis as described in AWWA M11.

B. Wall Thickness Design:

1. The pipe wall thickness selected shall be the greater of the thicknesses computed for the loading conditions listed below. The design procedure for welds at the joints is discussed in a subsequent section. The design procedure to determine wall thickness shall consider the following conditions:

a) Minimum thickness for handling.
b) External loads.
c) Internal pressure.
d) Surge pressure.
e) Longitudinal thrust forces caused by valves or changes in alignment.
f) Longitudinal forces resulting from changes in temperature.
g) Combined stress (hoop and longitudinal).

2. Minimum Wall Thickness for Handling: The minimum thickness for handling shall be determined by the following equation:
Thickness = Pipe Outside Diameter (inches) / 240.

3. Design for External Loads:
   a) Two conditions for external loads shall be considered:
      1) Live load plus dead load with full depth of cover.
      2) Live load plus dead load with minimal cover. The minimal cover used in the calculation must be coordinated with the specifications. The specifications must state the amount of cover required prior to operating heavy equipment above the pipe. The live loads must represent the heaviest equipment anticipated for use in compaction or hauling material above the pipe.
   b) Minimum wall thickness for external loads shall be determined by using the Iowa formula as presented in AWWA M11. Deflection for mortar-lined and coated steel pipe shall be limited to 2.0 percent of the diameter.
   c) When a cement mortar coating is applied over a dielectric coating to protect the dielectric coating from damage (rock shielding), it need not be considered a mortar coating for purposes of deflection requirements.

4. Design for Internal Pressure: The minimum wall thickness for internal pressure shall be determined by using the equation provided in AWWA M11 ($t = pd/2s$). The allowable hoop stress at working pressure for cement mortar lined and coated steel pipe shall be limited to that noted in Table 10.1 to minimize the potential for cracking of the coating as the pipe expands under pressure. Mortar coating used to protect dielectric coating shall not be considered for purposes of pressure design.

5. Design for Surge Pressure: The minimum wall thickness for surge pressure shall be determined by using the equation provided in AWWA M11 with an allowable steel stress noted in Table 10.1.

6. Thrust Forces: Longitudinal thrust force shall be calculated by the method described in Chapter 13 of AWWA M11. Closed valves will create the full “P x A” (pressure times area) force. Note that this force may cause tension or compression in the pipe wall depending on the location of the resisting forces. Bends in the alignment will create forces as shown in AWWA M11. Longitudinal thrust forces must be considered in the combined stress analysis described in a subsequent section.

7. Longitudinal Force Due to Change in Temperature: When the pipe joints are welded, the temperature of the steel will likely be higher than when the pipe is in service and conveying water. The stress in the pipe wall attributable to a change in temperature shall be mitigated by procedures described in Chapters 12 and 13 of AWWA M11. The specifications must state the maximum allowable temperature of the steel when the closure joints are welded. If controlled low strength material (CLSM) is used to backfill the pipe zone, the maximum temperature of the CLSM must also be stated in the specifications. The minimum temperature of the steel shall be considered 50 degrees Fahrenheit. The force due to a drop in temperature, between the time the joints are welded and the pipe is placed in service, will always create tension in the pipe wall. Temperature stresses must be considered in the combined stress analysis described in a subsequent section.

8. Longitudinal Force Due to Effect of Poisson’s Ratio: As the pipe expands due to internal pressure, it will tend to contract longitudinally. If the pipe is restrained from contracting, a longitudinal stress will develop in the pipe wall. The maximum magnitude of the stress is given by the formula:
   a) Longitudinal Stress = (Hoop Stress) x Poisson’s Ratio.
   b) For steel, Poisson’s ratio may be assumed to be 0.303. The longitudinal stress resulting from the effect of Poisson’s ratio should be added to the stress caused by a change in temperature. The Engineer is advised that situations may occur where the total longitudinal stress includes the temperature stress, Poisson’s stress, and bulkhead thrust stresses.

9. Design for Combined Stress:
   a) Combined stress shall be calculated by using the Hencky-Mises theory. If the maximum combined stress exceeds those values in Table 10.2, the steel wall thickness shall be

increased. Repeat the calculations and compare again. Combined stress calculations are not applicable for rubber gasket pipe.

Table 10.2 Maximum Allowable Combined Stress for Welded Steel Pipeline Water and Wastewater Guidelines City of Surprise		
Working Pressure	**Test Pressure**	**Surge Pressure**
Mortar or Dielectric Coating 50% of Yield (21,000 psi maximum)	Mortar or Dielectric Coating 62.5% of Yield (26,250 psi maximum)	Mortar or Dielectric Coating 66.7% of Yield (28,000 psi maximum)

C. Welding Specifications:

1. The design of welds shall take into consideration the following guidelines:
   a) Joint welds may be lap welds or butt welds.
   b) Weld certification per AWS D1.1 shall be provided.
   c) Field welding must be made by welders certified by ASME Boiler and Pressure Vessel Code.
   d) In case of exterior welds, space must be provided for welding and inspection of joints.
   e) NDT Weld testing must be performed on all field welded joints in accordance with ANSI/ASTM:
      1) Magnetic Particle Weld Testing according to ANSI/ASTM E 709.
      2) Air Weld Testing: All joints shall also be air tested in accordance with AWWA C206 by shop drilling and tapping two 1/4-inch NPT air test holes in the lap or bell end of the pipe. Apply 40 psi of air, or other suitable gas, into the connection between the two fillet welds. Paint the welds with soap solution. Mark leaks indicated by the escaping gas bubbles.

2. Lap Welds: Lap welded joints must be in accordance to AWWA C206.
   a) The allowable force on a lap weld shall be computed by the Engineer. The strength of the seal weld shall not be included in the allowable force calculation. Note that the AWWA M11 procedure assumes minimal space between the bell and spigot surfaces. It is important that this space and the resulting

eccentricity be in accordance with the requirements of AWWA C200.

b) If the actual force is greater than the allowable force, three options should be considered:
   1) The wall thickness could be increased.
   2) A double lap weld (inside and outside of the pipe) could be used instead of a single lap weld with a seal weld.
   3) A butt weld could be used instead of a lap weld.

c) Where more than one pass is required:
   1) Each pass except the first and final one shall be peeked to relieve shrinkage stresses.
   2) All dirt, slag, and flux shall be removed before the succeeding bead is applied.

d) Each weld pass shall place no more than a 1/8 inch of weld material using a combination of stitch and weave weld.

3. Butt Joint Welds: Full penetration butt joint welds with appropriate inspection and nondestructive testing must be capable of resisting a longitudinal force equal to the force resisted by the pipe wall.

4. Butt Strap Welds:
   a) The allowable force on a butt strap weld shall be computed in accordance with the procedure used for lap welds.
   b) Butt strap welds must be a minimum of 10 inches wide and have the same thickness as the pipe wall.
   c) A minimum of 2-inch lap must be provided at each pipe joint.

D. Restrained Joints: The Engineer shall design the restrained joint system to resist thrust forces through the development of friction forces between the pipe and the surrounding soil. The Engineer shall also determine the length of pipe necessary to transmit the force into the soil and indicate this on the project drawings. Factors affecting this length include pipe size, internal pressure, depth of cover, and the characteristics of the surrounding soil. Connections of valves, fittings, and reducers can incorporate rigid or flexible connections as follows:

1. Rigid Connections:
   a) Includes lap welded joints, butt-welded joints, butt strap joints, flanged joints, and harness joints.
   b) Joints are restrained from tension forces as well as compression and shear forces, except for harness joints.
   c) A harness can transmit axial tension forces, but has little capacity to transmit shear or compression forces.

d) All joints are to be designed to transmit the thrust force in either direction.
e) The most common type of restraining joint in steel pipelines is the welded joint. This joint shall be used on all steel transmission pipelines unless sufficient justification for using an alternate joint is approved by the City.

2. Flexible Connections:
   a) Includes bell and spigot rubber gasket joints, Carnegie shape rubber gasket joints, and mechanical coupling joints.
   b) Flexible connections are unrestrained and require harnesses to protect against axial transient forces.
   c) The design procedure for harnesses is covered in Chapter 13 of AWWA M11.

10.11 Ductile Iron Pipeline Design

A. General: The design of ductile iron pipe for City facilities shall adhere to the design procedures presented in DIPRA's Design of Ductile Iron Pipe or AWWA Manual M41. For ductile iron pipe sizes 16 inches or less, design shall conform to the requirements of the COS EDS.

B. Wall Thickness Design Procedures: The thickness shall be determined by considering external loads and internal pressures individually and then selecting the larger of the thickness using both methods.

1. The design thickness of ductile iron pipe shall be determined according to AWWA C150 and as described below:
   a) Calculate external loads (earth load plus truck loads).
   b) Calculate internal pressure (static pressure plus surge pressure allowance).
   c) Choose larger pipe thickness value.
   d) Add a 0.08-inch service allowance.
   e) Check pipe deflection.
   f) Add a standard casting allowance.

2. The appropriate pipe pressure class shall be determined with the calculated design thickness.

3. Internal pressure design of standard pressure classes shall be based on rated working pressure plus a surge pressure allowance of 100 psi.

4. Calculations must be based on a minimum yield strength in tension of 42,000 psi and 2.0 safety factor times the sum of working pressure and 100 psi surge allowance.

C. External Load Design:

1. The net wall thickness required for an external load is based on two design considerations:
   a) Limiting ring bending stress to provide a safety factor of 2.0 based on ultimate ring strength.
   b) Ring deflection is limited to 3 percent of the outside diameter for cement-mortar lined pipe and 5 percent of the outside diameter for flexible linings.

2. A net thickness shall be computed using both the bending stress and deflection equations in DIPRA. The larger of the two thicknesses is then selected as the net thickness required for external load design.

D. Internal Pressure Design: The hoop stress formula shall be used to calculate net thickness required for internal pressure as described in DIPRA. A safety factor of 2.0 must be applied to the sum of maximum working pressure and surge allowance. The standard surge allowance is 100 psi; however, the maximum anticipated surge pressure should be used if it is higher than the standard.

E. Standard Allowances: Once the net thickness has been determined, certain allowances are added to obtain the total calculated thickness requirement:

1. A service allowance (0.08 inch for all pipe sizes) shall be added to provide an additional safety factor for service allowance.

2. Casting tolerance shall be added to provide the latitude required by the manufacturing process and to prevent the possibility of significant deviation from design thickness. Casting allowance is dependent on pipe size as shown below.

Table 10.3 Allowances for Casting Tolerance Water and Wastewater Guidelines City of Surprise

Size (inches)	Casting Tolerance (inches)
42 and smaller	0.07
48	0.08
54	0.09

F. Restrained Joints: Thrust restraint design for Ductile Iron Pipe is covered in Chapter 8 of AWWA M41 and shall be used in designing thrust restraint systems for City ductile iron transmission pipelines. Calculations for restrained joint systems shall be submitted to the City with the 60 percent design.

10.12 Protective Coatings and Linings

A. General: Protective coatings and linings shall be applied for corrosion control as required in Chapter 5. Coatings must be properly applied in order to extend the life of a pipeline by deterring corrosion and pipeline deterioration. AWWA standards, listed in Chapter 5, must be used in specifying coatings and linings for City pipeline facilities.

B. Linings: Linings are installed on the interior surface of pipelines and protect against corrosion while maintaining low hydraulic frictional resistance. Main considerations related to linings include:

1. Cement mortar linings for steel and ductile iron pipe provide excellent corrosion protection while maintaining a smooth surface on the interior of the pipe.

2. Large steel pipelines are generally cement mortar lined. However, for severe duty, polyurethane or epoxy linings may be used to avoid cracking of cement mortar lining if pipe is subjected to wet/dry cycles.

3. Other reference material includes RP0175-75, Control of Internal Corrosion in Steel Pipelines and Piping Systems. This document is available from NACE International, Houston, Texas.

C. Coatings: Coatings are materials applied to the exterior of the pipe for corrosion protection.

1. The exterior protection for buried steel pipe shall be cement mortar. Dielectric tape wrapping may be used depending on soil conditions. Tape wrap coatings shall be protected by a cement mortar coating (“rock shield”). For exposed installation, the coating shall be polyurethane or epoxy, as described in Chapter 5.

2. Exterior protection for buried ductile iron pipe shall be a single or double layer of AWWA C105 polyethylene in accordance with Chapter 5, except as otherwise required by corrosion report.

D. The piping manufacturer shall be responsible for providing all piping material, linings, and coatings as a single source of responsibility.

10.13 Isolation Valves

A. General: The Engineer shall provide isolation valves for water pipelines in accordance with the requirements provided herein and the following:

1. Valve coating and lining shall match the respective coating and lining for the pipeline.

2. Valve shall be Class 150B or Class 250B based on the anticipated system pressure as noted in the IWMP.

3. Buried valves and valves located inside valve manholes shall be equipped with AWWA 2-inch operating nut and Type 304 stainless steel valve stem extension designed for maximum torque of 150-foot pounds.

4. Exposed valves shall be equipped with handwheel or chain operators designed for maximum pull of 50 pounds.

5. Buried valves shall be equipped with valve boxes in accordance with MAG Standard Detail 391-1 and 391-2, as modified in Chapter 6 of the Surprise EDS.

B. Butterfly Valves: Shall generally be used for isolating pipelines 24 inches and larger in diameter and shall be AWWA C504 general butterfly valves equipped with the following:

1. Bodies shall be flanged or mechanical joint ends, short-body type constructed of ASTM A 126 cast iron or ASTM A 536 ductile iron.

2. Discs shall be mechanically secured to shaft with stainless steel hardware and manufactured of materials per Section 4.4 of AWWA C504. Bronze discs are not acceptable.

3. Shafts shall be furnished with packed joint or mechanical seals to allow for removal of the valve operator mechanism without de-pressurization of the pipeline.

4. Acceptable manufacturers shall be as noted on the COS Preferred Equipment List.

C. Resilient-Seated Gate Valves: Shall generally be used for isolating pipelines under 20 inches in diameter and smaller, and shall be AWWA C509 valves equipped with the following:

1. Iron-bodied, non-rising stem type with O-ring seals.

2. Bonnet connected to body by bolts and nuts or studs.

3. Bolts, nuts, and studs constructed of cadmium-plated steel or Type 304 stainless steel.

4. Valve stems shall be bronze with a minimum tensile strength of 60,000 psi and containing not more than 5 percent zinc and 2 percent aluminum.

5. Acceptable manufacturers shall be as noted on the COS Preferred Equipment List.

10.14 Appurtenances and Structures

A. General: Pipeline appurtenances/structures include mainline valves, outlets, air vacuum assemblies, drain valve stations, access structures/assemblies, conduit for communications cable, marking tape, pipeline markers, and cathodic protection test stations. Each of these items is discussed in the following sections.

B. Dismantling Joints: Shall be equipped with flanged connections suitable for the system pressure and provide the following features:

1. Spool constructed of steel pipe in accordance with ASTM A 53 for sizes 3 to 12 inches or ASTM A 36 for sizes 14 inches to 72 inches.

2. End ring constructed of ASTM A 536 ductile iron for sizes 3 inches to 12 inches, or ASTM A 36 or A 53 for sizes 14 inches to 72 inches.

3. Follower ring constructed of ASTM A 536 ductile iron or ASTM A 36 steel.

4. Bolts and Nuts:
   a) Aboveground: Constructed of high-strength, low alloy steel in accordance with AWWA C111.
   b) Buried and underwater: Constructed of Type 316 stainless steel in accordance with ASTM F 593.

5. Tie Rods: High tensile steel in accordance with ASTM A 193 Grade B7.

6. Coating and lining shall match the associated piping.

C. Mainline Valves: Design of mainline valves shall consider spacing and location and layout of valve structure as follows:

1. Mainline valves on potable water transmission pipelines shall be placed every 1/2 mile. The location, size, and type shall be as shown on the drawings and as described in the COS EDS.

2. Mainline valves shall be the same diameter as the pipeline.

3. Valves 24 inches in diameter and larger must be placed in a valve manhole.

D. Valve Manholes: Layout of Manhole: The valve manhole shall be in accordance with City of Surprise Detail No. 6-03. The manhole design shall consider the following:

1. Manhole shall be pre-cast reinforced concrete.

2. Manhole must allow proper accessibility for maintenance and inspection.

3. Manhole shall be designed with provisions for drainage and must include a sump for drainage.

4. Pipe penetrations shall be leak proof to avoid water transfer in or out of structure.

5. Reinforcing steel in the manhole wall shall not be in contact with pipe to avoid short-circuiting of the cathodic protection system.

6. A dismantling joint shall be provided for maintenance and removal of the valve.

7. In-line valves shall be placed in a section of pipeline with no slope. If a valve manhole is required with the valve, the wall of the manhole shall not be designed to restrain axial thrust from the pipeline.

8. Acceptable mainline manual butterfly valve actuators shall be as noted on the COS Preferred Equipment List.

E. Outlets: An outlet (future or current) is simply a specified diameter tee or outlet branching off the main transmission line.

1. Outlets for future connections must have an isolation valve in a valve manhole if 24 inches or larger. The isolation valve shall be followed by a short spool of pipe extending outside of the manhole by at least 5 feet with a bumped head or end cap with thrust restraint.

F. Air Valves: Properly designed air valves shall be used to allow release or admittance of air into the pipeline system during filling, draining, and normal operations; to permit air release from high points in the pipeline; and to protect the pipeline from vacuum pressures caused by surge conditions. The following considerations shall be taken:

1. AWWA Manual M51 shall be used as a guide for selecting, sizing, and locating air valves in City transmission pipelines.

2. In the design of transmission pipelines, AWWA C512 shall be used as a standard for air valve design. Special air valves deviating from the AWWA C512 Standards shall receive prior written approval by the City in accordance with Chapter 1, Section 1.5 of the COS EDS. It is the Engineer's responsibility to address the following considerations during the design of transmission air valves:
   a) Location of air valve
   b) Type of air valve
   c) Size of air valve.

3. PVC valves are not allowed.

4. All air valves shall be equipped with a corporation stop at the connection to the transmission pipeline, and a curb stop at the connection to the air valve.

G. Combination Air Valves: The combination air valve combines the operating features of the air-release valve and the air/vacuum valve.

1. The air-release valve function is designed to release small pockets of air as they accumulate at high points in a pressurized pipeline.

2. The air/vacuum valve function is designed to provide vacuum protection for the pipeline and to allow large quantities of air to be released from or admitted into the pipeline during filling or draining.

3. To facilitate the isolation and draining of pipeline segments, at least one combination air valve shall be installed at the high point between in-line valves; at all other high points along the pipeline; and at such other locations as are recommended in AWWA Manual M51.

4. Acceptable combination air-valve manufacturers shall be as noted on the COS Preferred Equipment List.

H. Six-Inch Manual Blow-Off Assembly: Drain valves will need to be included along the pipeline to enable drainage of the pipeline during times of maintenance or emergency. The following considerations shall be taken for selection and design:

1. Blow-off assemblies shall be located at all low points in the pipeline.

2. Blow-off assemblies shall also be required on the high side of isolation valves that create low points when closed.

3. Blow-off assemblies shall be configured as shown in Figure 10.1.

4. The Engineer shall verify that water from the blow-off assembly will not adversely affect neighboring properties or facilities.

5. It is anticipated that blow-off assemblies will discharge to retention basins or storm drains. Points of discharge, including the location of the air gap to prevent contamination of waterline, shall be identified and submitted as a part of the 60 percent progress review submittal. If it is determined that the blowoff assembly requires a permit to discharge to a storm drain or retention basin, the Engineer will prepare the required permit application and submit it to the appropriate agency for approval.

I. Special Connection Points: The pipeline may connect to various facilities, including pumping stations and reservoirs. Each connection is unique and requires special consideration.

J. Marking Tape: All water transmission pipelines shall be marked with marking tape located one foot above the top of pipe. For potable water lines, the marking tape shall be blue in color and labeled “Caution: Potable Water Line.” For well transmission lines, the marking tape shall be black in color and labeled “Caution: Raw Water Transmission Main.”

1. The tape shall be 12-inch wide metallic type marking tape.

K. Pipeline Markers: Pipeline markers shall be provided to locate buried water transmission lines:

1. Marker balls shall be installed on all potable water and well water transmission pipelines at all fittings and every 200 feet if the distance between fittings is greater than 200 feet. Potable water marker balls shall be blue in color and well water markers shall be black in color. Placement of marker balls shall be in accordance with COS EDS Detail 6-25.

2. Carsonite Survivor markers shall be installed directly over the pipeline in open, unimproved areas with the following information:
   a) City of Surprise
   b) Name
   c) Appurtenance abbreviation such as Air Valve (AV), Blow-Off Assembly (BO), Turnout (TO), Bifurcation (BF), Lateral Centerline (C/L)
   d) Station Number
   e) Distance and direction to appurtenance or lateral centerline (C/L).

3. Carsonite markers shall be installed at the following locations:
   a) Maximum distance between markers or monuments is 1000 feet
   b) Where the pipeline crosses section lines
   c) At blow-off assemblies
   d) At both sides of major road crossings
   e) Where the pipeline changes direction
   f) At bifurcations or turnouts.

L. As-Built Information: Contract specifications shall require that all pipelines and appurtenances be located by top of pipe elevation and GPS coordinates, and recorded on as-built drawings.

M. Thrust Restraint Systems: Thrust forces occur at changes in pipeline size or direction, such as at elbows, tees, reducers, caps, plugs, closed valves, etc. The following considerations shall be taken for design:

1. The Engineer is responsible for identifying the thrust forces within a pipeline facility and calculating per AWWA standards.

2. Once the forces have been determined, remedial actions can be considered for restraint. Thermal stresses and surge or transient pressures caused by water hammer or pump shutoff head must be considered in conjunction with hydrostatic thrust forces.

3. The Engineer shall utilize a restrained joint system to balance thrust forces.

4. The Engineer shall design all thrust restraints to withstand maximum anticipated pressure, whether operational, testing, or surge.

5. The Engineer shall design the complete thrust restraint system. The information contained on MAG Standard Detail 303 shall not be used unless calculations are produced for the specific project conditions

that verify the stated restrained lengths. A performance specification that requires the pipe manufacturer or contractor to submit a thrust restraint design for review is not acceptable.

6. Engineer shall submit to the City all thrust restraint calculations.

N. Thrust Blocks: Unless specifically noted otherwise (such as COS EDS Standard Detail 6-09), thrust blocks will not be allowed on COS transmission lines.

10.15 Disinfection

A. General: Provide pressure testing, flushing, disinfection, and sampling of all potable water piping prior to placing the line in service.

B. Pressure Test: Complete pressure testing in accordance with EDS and MAG 610.14.

C. Chlorination and Bacteriological Test: Complete chlorination and bacteriological testing in accordance with EDS and MAG 611.

D. Flush, Sampling, and Testing: Complete flushing, sampling, and testing in accordance with the EDS and MAG 611.15.

E. Repeat chlorination, flush, sampling, and testing until satisfactory results are achieved.

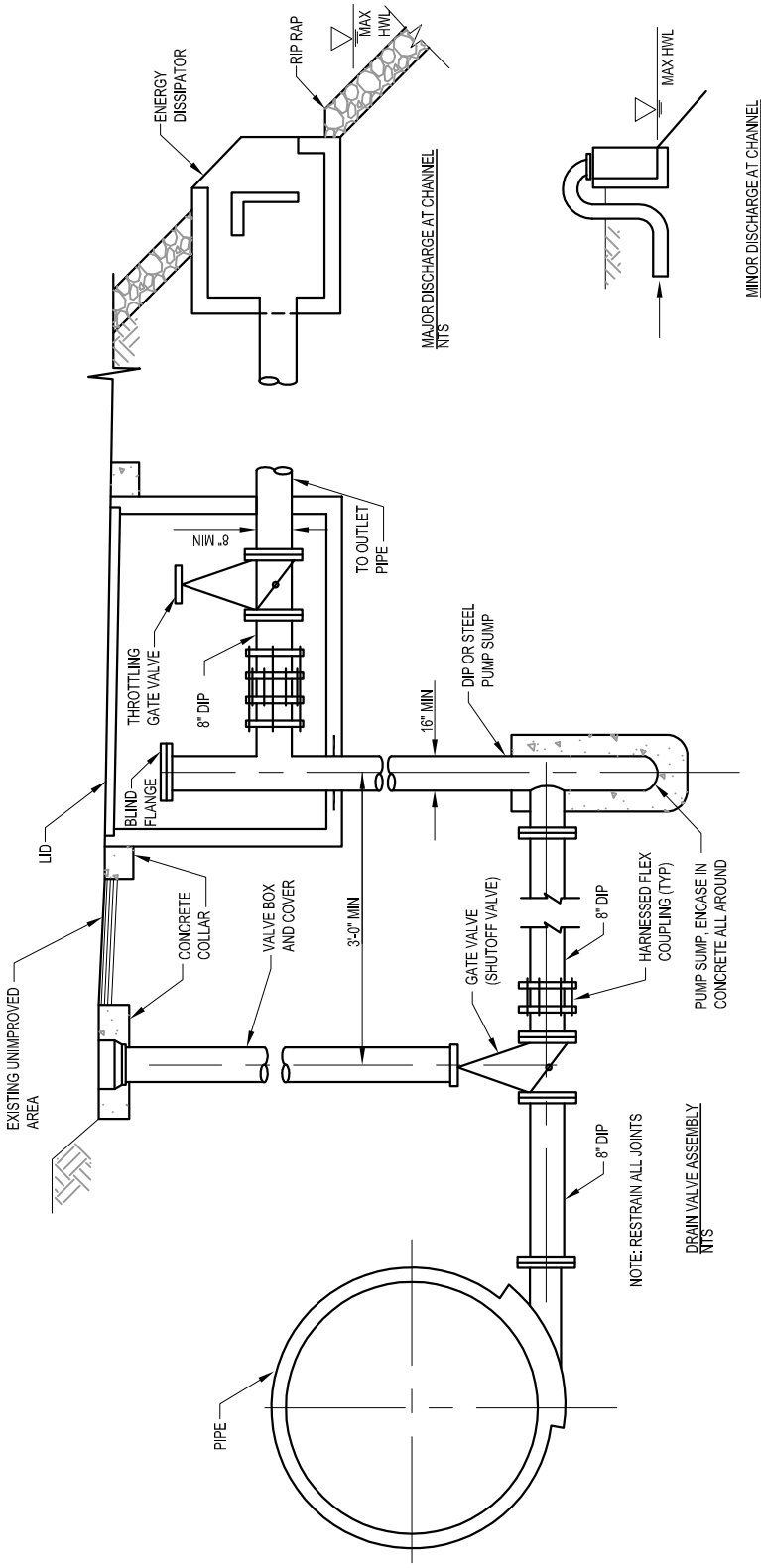

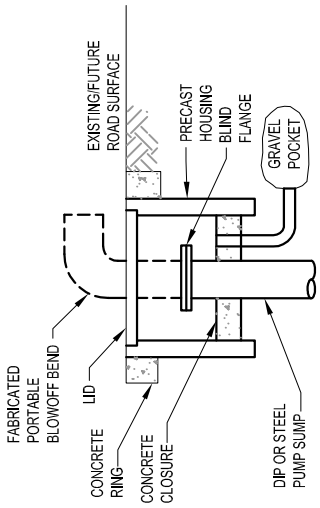

SPECIAL DESIGN CRITERIA

1. UNLESS SPECIFICALLY NOTED OTHERWISE, DRAIN VALVE PIPING SHALL BE 8", AND PUMP SUMP SHALL BE 16".
2. LOCATE THE PUMP SUMP IN THE PARKING LANE WHERE APPLICABLE, EXTEND THE OUTLET TO THE APPROPRIATE DISCHARGE POINT.
3. ENGINEER SHALL DETERMINE ACTUAL LOCATION, DIMENSIONS, GRADES, ELEVATION STRUCTURAL REQUIREMENTS AND OTHER INFORMATION AS REQUIRED FOR A COMPLETE DESIGN.
4. DRAIN VALVE PIPING AND APPURTENANCES SHALL MEET THE PRESSURE CLASS OF THE ADJACENT PIPE.

FINAL

REVISIONS	DWN	APVD	APVD	DATE

CITY OF SURPRISE

Maricopa County, Arizona

Water and Wastewater Guidelines

DESIGNED G.S.
DRAWN PAT
CHECKED
APPROVED
APPROVED
DATE APRIL 2011

SURPRISE
ARIZONA

DRAIN VALVE ASSEMBLY

SCALE

FIGURE	REV.
10.1	0

CHAPTER 11 WATER PUMP STATIONS

11.01 General

A. The intent of this chapter is to provide guidelines for the design of finished water pump stations equipped with vertical turbine or horizontal, split-case pumps.

B. This chapter applies to finished water pump stations with design flows of up to 15,000 gpm and TDH of up to 462 feet where three or more pumps are required at buildout conditions.

11.02 Definitions

A. Firm Pumping Capacity: The total pumping capacity of the station at maximum day demand with the largest pump out of service, at maximum static head differential levels.

B. Definitions for technical terms used in this chapter are as defined in the ANSI/HI *Pump Standards*:

11.03 Concept Design Review (CDR) Phase

A. General: The CDR of the project shall be summarized and presented in a CDR report. The report will be submitted to the COS for review and acceptance. The CDR is the basis for the subsequent design process and must include the following at a minimum:

1. Executive Summary.
2. Table of Contents.
3. Project Background.
4. Description of property ownership, right-of-way, and easement information (per Chapter 1).
5. Draft Traffic Study.
6. Draft Drainage Study.
7. Draft Geotechnical Investigation Report.
8. Draft Environmental Investigation Report.
9. Draft Corrosion Control/Cathodic Protection Report.
10. Draft Surge Analysis Report.

11. Draft Electrical Coordination Study.

12. Topographic mapping information and survey summary.

13. Building design parameters.

14. Description of pump selection to include at a minimum:
    a) Technical selection criteria including operational scenarios of flow and head with the selected pumps.
    b) Cost considerations including capital costs and operating and maintenance costs.
    c) Description of anticipated operational set points.
    d) Summary of constructability issues.
    e) Summary of maintenance procedures.
    f) Quantity of duty and standby pumps (minimum of 3 total).
    g) Proposed pump type and configuration, including the motor horsepower, desired number of stages, and impeller diameter.
    h) Manufacturer's curves for each type of proposed pump.
    i) Table that summarizes the pump design criteria, including design head, design flow, motor horsepower, net positive suction head available, net positive suction head required, and design efficiency.

15. Summary of demand requirements from most recent water master plan, which includes maximum day demand, peak hour demand, and total dynamic head (TDH).

16. Description of architectural features.

17. Description of security features in accordance with the current COS Security Master Plan.

18. Major equipment design criteria.

19. Summary of preliminary coordination meeting with Arizona Public Service Company.

20. Noise attenuation to satisfy requirements of COS Unified Development Code.

21. Review of latest water master plan analysis and effects on existing facilities within applicable water zone(s).

22. Summary of individual electrical loads with total connected electrical load.

23. Preliminary (30 percent) Drawings, which include:
    a) Civil site plan that presents proposed grading and major yard piping.
    b) Pump Station Plan showing major dimensions and proposed locations of mechanical equipment, major piping, and electrical equipment.
    c) Process and Instrumentation Diagrams (P&IDs) in accordance with Chapter 8.
    d) Electrical single-line diagram in accordance with Chapter 7.

24. Preliminary outline of technical specifications.

25. Pump and standby pump quantities:
    a) Minimum of three total pumps
    b) Maximum of ten total pumps
    c) Minimum of one standby pump.

26. Provisions for expandability and locations of future:
    a) Mechanical equipment
    b) Electrical equipment
    c) Major piping.

27. Standby generator sizing with proposed fuel type, fuel tank size, fuel consumption, and power output.

28. Summary of Community Development entitlement submittals.

29. Summary of major stakeholders and utilities with contact information for each.

30. Summary of Quality Level A subsurface utility location data in accordance with ASCE *Standard Guideline 38-02 for the Collection and Depiction of Subsurface Utility Data*.

31. Summary of permit requirements and submittals.

32. “Line of Sight” study for PLC/Radio Control (as requested by the COS).

33. Proposed project schedule with milestones for:
    a) Design completion
    b) Bid date
    c) Construction.

34. Preliminary cost estimate.

35. Proposed PLC and SCADA that includes discussion on integrating with existing systems.

36. Preliminary control descriptions with discussion on proposed automatic and manual modes of operation.

B. It is the responsibility of the Engineer to ensure that the design conforms to the ADEQ *Engineering Design Guidelines for the Construction of Water Systems*.

11.04 Agency and Utility Coordination

A. The Engineer shall initiate contact and coordinate efforts with outside utilities and agencies in accordance with Chapter 1.

11.05 Final Design Phase

A. General: The Engineer shall provide a Final Design with progress submittals to the COS at 60 percent and 90 percent level of completion in accordance with Chapter 1, which builds upon work completed during the CDR. The Final Design shall include:

1. Final design drawings.

2. Final specifications.

3. Details of security features in accordance with the current COS Security Master Plan.

4. Final cost estimate.

5. Final drawings and specifications shall meet the general requirements presented in Chapter 1.

6. Final versions of all studies and reports submitted with the CDR.

11.06 Hydraulic Analysis

A. The Engineer shall perform a hydraulic analysis for all new, upgraded, or modified pump stations. Examples of modifications that require a hydraulic analysis include:

1. Pump replacement.

2. Modifications to pumping capacity, pump control, and operation adjustment.

3. Significant changes in total dynamic head (TDH) and check valve/control, valve closure time adjustments, etc.

B. Steady State Analysis: The Engineer shall perform a steady-state hydraulic headloss analysis of the pumping and transmission system to determine the TDH requirements of the pump station. TDH calculations are required for new facilities and for modifications to existing facilities. The TDH calculations need to consider the following:

1. Vertical and horizontal alignment of transmission lines based on available information such as as-built drawings.

2. Detailed headloss analysis of the pump suction piping to determine the net positive suction head available (NPSHA) for the pumping system. NPSHA shall always be more than the net positive suction head requirement (NPSHR) of the selected pump(s).

3. A system head-capacity curve.

4. Minimize pressure fluctuation within pressure zones to be less than 10 psig.

5. If necessary, the COS will provide operating criteria of existing pumping, transmission and storage facilities such as reservoir levels, pump curves, and discharge pressures.

6. Minimum and maximum static head analysis.

7. Minimum and maximum pumping rates.

8. Pressure class and age of existing and proposed pipe.

9. Ensure pump shutoff head is less than pipe class rating.

10. Friction factors for existing and proposed pipe materials.

11.07 Surge Analysis

A. General: The Engineer shall perform a transient (surge) analysis for all pumped systems whether new or a modification of an existing system.

B. The analysis will be conducted with computer simulations of the pumping and transmission facilities. The following scenarios will be included at a minimum:

1. Normal operating conditions (pump startup and shutdown).

2. Emergency shutdown with loss of utility power with all ‘duty’ pumps in operation.

C. Surge Analysis Report: A surge analysis report that describes the methods and results of the computer simulations will be provided. The report will include:

1. Recommendations for pump operation.

2. Size, quantity, and location of all recommended surge mitigation measures such as surge tanks, combination air/vacuum relief valves, and air relief valves.

3. Maximum and minimum pipeline pressures.

11.08 Surge Mitigation Measures

A. The Engineer shall be responsible for all elements of the pump station design, including surge mitigation measures.

B. The Engineer shall utilize the pressure range derived from the surge analysis as the basis for establishing the design of the associated piping, including the design of pipe joints (gaskets), fittings, valves, surge tanks and appurtenances used in the yard, and transmission piping.

C. Acceptable surge mitigation measures include the following:

1. Attenuation of surge pressure by programmed pump control valve closure.

2. Design pipelines, valves, and flanges to withstand maximum and minimum pressures based on the surge analysis.

3. Provide freeze protection measures for exposed and outdoor piping subjected to freezing temperatures in accordance with this chapter.

4. Selection and location of air relief valves and combination air/vacuum relief valves.

5. Redundant air relief valves and combination air/vacuum relief valves are required.

6. Identification of proper startup, operation, and shutdown procedures for the system.

7. Surge tanks, if warranted by the surge analysis.

8. Surge anticipation valves, if warranted by the surge analysis.

D. Surge Tanks: Depending on the surge analysis performed, pump stations may be required to employ a surge tank on the discharge and/or supply side of the pump for surge protection. Surge tanks, if required, will be designed as follows (Figure 11.1):

1. Horizontal, above grade, center-feed, ASTM A36 steel pressure vessel as follows:
   a) Rated to withstand maximum pressure of at least 1.5 times the maximum design pressure for the system.
   b) Rated to withstand full vacuum pressure of -14.7 psig.
   c) Fabricated and tested in accordance with ASME Section VII Boiler and Pressure Vessel Code for Unfired Pressure Vessels.
   d) Provide ASME Code stamp and pressure rating on exterior.
   e) Designed with anchored supports to meet seismic criteria and wind criteria for the site.
   f) Primed and coated with an epoxy system for corrosion protection.
   g) Equipped with pressure relief valve vented and piped to a safe location.
   h) Hinged, 30-inch diameter access manways.
   i) Utilizes internal energy dissipater to attenuate surge.
   j) Provide isolation valves, drain piping, and recirculation piping.
   k) Fully-guarded glass, liquid level sight gauge with graduations to indicate normal level, low level, and high level.

2. Utilize a pad-mounted compressed air system and level sensor to maintain the air-to-water ratio and alarms.

3. Provided with packaged, pad-mounted, reciprocating air compressors equipped with the following:
   a) Integral vertical or horizontal steel reservoir.
   b) Designed to fill the surge tank in no longer than 45 minutes at a pressure of at least 10 psig above system pressure.
   c) Capable of producing a minimum of 30 scfm.
   d) A local, lockable disconnect to de-energize the panel.

E. Freeze Protection: Protect exposed and outdoor piping subjected to freezing temperatures in accordance with this chapter.

F. Surge Tank Control System: To be provided by a single entity and include:

1. An automatic air volume control system that utilizes a surge tank level probe and packaged air compressor system to control the air/water ratio and shall include the following functions at a minimum:
   a) High water level condition shall open an air supply valve after a time delay to increase the air volume in the surge tank.
   b) Low water level condition shall open an air bleed valve after a time delay.

2. Stainless steel, NEMA 4X control panel with all necessary instrumentation controls in accordance with Chapter 8, which indicates the following at a minimum:
   a) Tank liquid levels
   b) High water alarm light
   c) Low water alarm light
   d) Air compressor run light
   e) Low air pressure alarm light
   f) High air pressure alarm light
   g) Surge tank level probe fault alarm light.

11.09 Vault Standards for Water Pump Stations

A. General: The Engineer shall locate vaults in non-traffic areas whenever feasible.

B. Confined Space Entry Considerations: Because of “confined space” regulations and safety issues, the COS requires that prior to starting final design of any vaults, the Engineer must receive written approval for their use by the COS Public Works Director or his designee.

C. Interior Dimensions: Provide vaults with interior dimensions that provide sufficient clearance for maintenance and equipment removal by providing the following interior dimensions:

1. Height not less than 7’-0”

2. Walkways width not less than 3’-0”

3. Distance from walls to equipment, valves, and piping not less than 2 feet 0 inch.

D. Drainage: All vaults shall be designed to drain to a sump equipped with an 18-inch deep sump with an exterior 120 VAC/60 Hz/1 Ph ground fault circuit interrupter receptacle to be used for a portable sump pump.

E. Valve Vaults: For ease of access and maintenance, the COS requires the use of vaults to access gear boxes of buried valves for sizes 12 inches and larger.

F. Vault Access: Provide single or double leaf access hatches or manways for vault access. Entrance risers shall be a minimum of 36 inches in diameter, complete with hot-dipped galvanized access ladders.

G. Traffic Area Considerations: In traffic areas, vaults and access hatches shall incorporate heavy-duty, cast iron frames and covers capable of withstanding H20 live loads imposed by heavy maintenance equipment and vehicles.

H. Non-Traffic Area Considerations: In non-traffic areas, vaults and access hatches shall be designed for live loads due to foot traffic and maintenance equipment such as hoists.

I. Electrical and Instrumentation Considerations: Only necessary instrumentation and electrical equipment and accessories such as intrusion switches, GFCI power receptacles, and interior lighting are allowed inside vaults. Whenever possible, all electrical and instrumentation shall be located in a remote, dry, and secure area.

11.10 Flow Measurement

A. Magnetic flowmeters shall be used for flow measurement of pump stations in accordance with the requirements of Chapter 8 and as follows:

1. Located above grade to avoid confined space entry issues.
2. Provided with sufficient upstream and downstream straight runs of pipe.
3. Equipped with bypass and manual isolation valves.
4. Provided with flexible couplings or dismantling joint to facilitate removal.

B. An exterior panel shall be provided with a visual display of the flowmeter measurement in units of gallons per minute or million gallons per day with totalizers that indicate thousands of gallons or as determined by the COS.

11.11 General Structural Design Loads

A. General: Structures shall be designed to safely support the imposed live and dead loads in accordance with the more stringent requirements of Chapter 4 or this section. Loading combinations and live load reductions

shall be according to the requirements/limitations set forth in the IBC. All live and dead loads used for the purpose of design shall be developed for the intended use or occupancy of the particular structure.

B. The general service design loads provided in this section shall be used in the design of pump station and vault structures. These loads include dead loads, live loads, impact and vibration loads, wind loads, earthquake loads, hydrostatic loads, lateral soil loads, and miscellaneous loads.

C. Dead Load Unit Weights: In addition to the dead load of the basic structural elements, the following items, at a minimum shall be used:

1. Piping 12 inches in diameter and smaller shall be treated as uniformly distributed loads. Typical values are 20 pounds per square foot (psf) for extensive piping and 10 psf for light to moderate piping.

2. Piping larger than 12 inches in diameter shall be considered as concentrated loads.

3. Pipeline thrust under maximum pressure conditions.

4. Earth: 120 pounds per cubic foot (pcf), or as recommended by the project/development's geotechnical engineer.

D. Live Loads: In addition to concentrated loads, the following items shall be used:

1. General roof live loads, walkways, platforms, and stairs shall have a minimum (unreduced live load of 100 psf). Additional consideration shall be given for the type, size, and weight of specific equipment and maintenance of equipment in determining the actual design live loads and concentrated loads. Requirements are as follows:
   a) Mechanical/Electrical Rooms: Equipment weight + 100 psf.
   b) Stairs/Walkways: Use the greatest of 100 psf or 1,000 lbs.
   c) Grating: Use a concentrated load of 250 lb/ft with less than 1/4-inch deflection.
   d) Use H20 load per AASHTO for truck loading.
   e) Electrical and pipe space areas can be estimated by using 150 psf or more as determined by the actual equipment.

E. Hydrostatic Loads and Lateral Soil Loading: The values for lateral soil pressures and soil-bearing pressures for below-grade structures or parts of structures shall be designed in accordance with the project's geotechnical report(s)/project's geotechnical engineer.

F. Buried reinforced concrete structures shall be designed for hydrostatic forces imposed by the presence of groundwater. The design of these structures shall include resistance to uplift forces.

G. Lateral soil loadings shall include active soil pressures for yielding walls, at-rest soil pressures for non-yielding walls, and surcharge pressures due to a soil minimum cover of 2 feet or equal to the actual depth of the soil cover above the structure.

H. Seismic soil pressures shall be used in accordance with the Geotechnical Report.

I. For buried hydraulic structures, use high operational water level without backfill (33 percent overstress).

11.12 Architecture and Landscaping

A. Design Appearance Guidelines: The appearance of the pumping facilities will reflect features of the surrounding community per the COS Community Development requirements and the Surprise Unified Development code.

B. Height of Structures: Facilities shall be kept as low in profile as is functionally possible.

C. Reflective Finishes: Visible and highly reflective materials and surface finishes should be avoided on the exterior of the facility.

D. Exterior Building Walls: Provide low maintenance material such as split-face masonry block for exterior walls of the site and pump building that matches the surrounding development and meets requirements of current COS Security Master Plan.

E. Anti-Graffiti Coating: At a minimum the exterior building walls and masonry perimeter wall shall be coated with an anti-graffiti protection system as follows:

1. Two-component high build epoxy polymer system with at least 35 percent solids by volume.

2. Coating shall provide resistance to weather and rain damage, abrasion, peeling, ultraviolet degradation yellowing, and chemical attack.

3. Coating system shall withstand 120 cleaning cycles without degradation and shall allow 100 percent removal of paint and graffiti

without signs of deterioration or change in appearance. System shall not require reapplication to maintain performance over 10 years.

4. Color shall be clear unless indicated otherwise.

5. Base Coats: Apply at least 2 coats at rate and thickness required by the manufacturer to produce a pinhole free base.

6. Finish Coats: Apply at least 2 coats.

F. Roof Hatches: Where a roof or sunshade is provided for a pump station, roof hatches are required over each pump as follows:

1. Sized to accommodate the removal of the motors and pumps.

2. Motorized, capable of operation at ground level.

G. Landscape Coordination: The landscaping of the facility is required to match surrounding community in accordance with the Surprise Unified Development Code and as follows:

1. Locate vegetation at a sufficient distance from fences and structures to prevent unauthorized access to site.

2. Consider mature vegetation height to prevent damage to adjacent facilities.

3. Provide vegetation with root system that will not damage sidewalks, pavement, or buried utilities.

11.13 Pump Systems Design

A. General: Include the following in the project design:

1. Design TDH and design flow for pump and at least 4 additional design points to define the pump curve.

2. Design requirements for the pump, motor, drive (constant or variable speed).

3. Soft-starters where starting voltage drop or current needs to be limited.

4. Materials of construction for drive shaft, barrels, couplings, supports, and impellers.

5. Instrumentation, controls, and appurtenances.

6. The pump and motor shall be provided by the pump supplier, who shall assume single source responsibility.

B. Expandability: Pump station expandability will be evaluated by the COS on a case-by-case basis. Expandability requirements, if required, include the following:

1. Reserve space for future pump and equipment.

2. Pump cans, suction, and discharge piping manifold shall be sized for future flows.

3. Electrical and control facilities such as motor control centers (MCCs), conduit, and controls shall be provided based on largest anticipated equipment at buildout conditions.

C. Pump Selection: Pump selection and quantity shall consider the following:

1. Initial and buildout firm pumping capacity of facility and for each pump.

2. Specific speed and suction specific speed at initial and buildout firm capacity.

D. System Head Curves: The Engineer shall develop a series of system head curves for pump scenarios, which include the following at a minimum:

1. Curve for low head condition, which includes consideration of high level in supply reservoir and low level in receiving reservoir.

2. Curve for high head condition, which includes consideration of low level in supply reservoir and high level in receiving reservoir.

3. Each System Head Curve shall indicate:
   a) Variation of TDH with flow.
   b) Family of curves for a variety of operating conditions, which include minimum, typical, and maximum values for:
      1) Static head
      2) Flow
      3) Pipe roughness coefficient.
   c) Number of operating pumps.
   d) Selected pump(s) and impeller characteristics.
   e) Curves at varying speed if pump speed control is required.
   f) Efficiency.
   g) Required Net Positive Suction Head (NPSHR).
   h) Brake Horsepower.

4. System Head Curve analysis that varies operating conditions as well as number of operating pumps to verify the following:
   a) Pump curve is not “flat” where small change in TDH would result in a large change in pump flow.
   b) Typical operating point on the system curve is near the maximum efficiency point or Best Efficiency Point (BEP).
   c) The pump(s) will operate such that pump shutoff or run out operation is not expected at either minimum or maximum operating conditions.
   d) The selected pump/impeller combination is located near the center of the pump-operating curve.

E. Pump Inlet Configuration: The Engineer shall evaluate NPSHR and NPSHA at maximum flow and maximum temperature as well as at minimum flow at maximum temperature. The pump inlet shall be:

1. Designed in accordance with Hydraulic Institute Standards to prevent cavitation, turbulence, vortexing, and jet velocities.

2. Designed such that the NPSHR is less than the NPSHA at the following conditions (where NPSHA is reduced by a minimum of 5 feet to provide a factor of safety):
   a) Initial minimum and maximum flow conditions.
   b) Buildout minimum and maximum flow conditions.

F. Mechanical Layout: In general, pumps shall be arranged to provide convenient access for operation, maintenance, equipment installation, and equipment removal on at least three sides. The mechanical layout shall also include:

1. Sufficient clearance around all pumps, valves, piping, panels, and other equipment based on minimum manufacturer’s recommendations and as follows:
   a) Unless otherwise required by OSHA or NEC, a minimum of 3-foot clearance around 3 sides of pump equipment.
   b) Sufficient vertical and horizontal clearance for removing and installing pumps, motors, valves, and other equipment.
   c) Unless otherwise required by IBC or manufacturer’s minimum space for maintenance, a minimum 42-inch wide walkway corridor shall be provided between walls pumps, piping, valves, and other equipment.
   d) Evaluation of multiple pump manufacturers to determine the largest possible footprint and vertical envelope required for pumps and motors.

e) A minimum 3 pumps (2 duty, 1 standby) with reserved space for additional pumps for buildout conditions.

11.14 Pump Speed Control

A. General: The COS standard is to utilize dedicated variable frequency drives (VFDs) for speed control of pumps. Approval to use of constant speed pumps for a project must be granted by the COS Public Works Director in accordance with Chapter 1, Section 1.02.

B. Variable Speed Control: Each pump shall be equipped with a dedicated VFD that meets the requirements of Chapter 7. In addition, VFDs shall include the following:

1. Complete description of the power system including requirements for operating through standby generators.
2. Power requirement as a function of pumping capacity.
3. Minimum and maximum allowable power factor over working speed range.
4. Minimum allowable efficiency at full speed and load.
5. Required operating ambient temperature range.
6. Required diagnostics provisions.
7. Control and monitoring signal interface.
8. Acceptable ambient noise level.
9. Adjustable ramp acceleration/deceleration time.
10. Local control functions, which include manual speed control.
11. Characteristics (available short circuit current X/R ratio) of power supply including alternate and standby power supplies.
12. Allowable speed regulator error.
13. Provide recommended list of VFD spare parts.
14. Cooling requirements.

11.15 Pump Station Piping and Valves

A. General: The Engineer shall design pump station piping according to the requirements of this section. A typical pump station layout is presented in Figure 11.2. The general piping requirements include but are not limited to:

1. Flanges and pressure classes shall be compatible for all piping under all operating and surge pressures.
2. All piping and valves shall be provided with sufficient vertical and horizontal clearance for maintenance and removal.
3. Valves and operators shall be readily accessible and located not more than 5 feet above the finished floor.
4. All piping and valves shall be adequately supported such that removal will not impart loads on equipment or adjacent piping.
5. All pressurized piping shall be restrained.

B. Exposed piping within the pump station shall be flanged, welded steel pipe, or flanged, ductile iron pipe in accordance with the following:

1. Steel pipe: Conform to the requirements of ANSI/AWWA C200 and designed per AWWA M11. Piping to be cement mortar-lined with a primed epoxy coating system.
2. Ductile Iron Pipe (DIP): Shall be Class 53 cement mortar-lined with a primed epoxy coating system.
3. All flanged joints shall conform to the requirements of ANSI/AWWA C207.
4. All materials and coatings shall meet requirements of NSF 61.

C. Suction piping shall be designed to minimize long runs and high points and meet the following requirements:

1. Maximum pipe velocity of 5 ft/s based on maximum flow at buildout conditions.
2. Air relief valves to be provided at all high points, which are hard-piped to a nearby drain.
3. All joints shall be restrained.
4. Liquid-filled, damping pressure gauges within the appropriate range.

5. Reducers shall be the eccentric type with flat end on top.

6. Isolation valves shall be provided on each pump suction lateral and shall be as follows:
   a) Fully flanged butterfly valve in accordance with AWWA C504 with geared handwheel operator and position indicator for pipe sizes larger than 12 inches.
   b) Fully flanged resilient wedge gate valve, rising stem, in accordance with AWWA C515 with position indicator for pipe sizes 12 inches and smaller

D. Bypass to Discharge: Provide as recommended by the surge analysis or Engineer and approved by the COS to protect against suction surge pressures, supply low pressure flow during pump failure, or relieve discharge manifold pressure equipped with the following:

1. Check valve: Silent, globe style, non-slamming type.

2. In-line pressure relief valve with flanged, manual isolation butterfly valves in accordance with AWWA C504.

3. Surge anticipation valve.

E. Discharge piping shall be designed to minimize high points and meet the following requirements:

1. Maximum pipe velocity of 10 ft/s.

2. Air relief valves to be provided at all high points, which are hard-piped to a nearby drain.

3. All joints shall be restrained.

4. Pump discharge laterals shall utilize 45-degree wyes to connect to a common discharge header.

5. Discharge header shall utilize flanged connections to pumps and valves and shall be located above grade where feasible to facilitate maintenance.

6. Spool with minimum 1-inch NPT welded coupling for steel pipe or manufactured instrument tee for ductile iron pipe to accommodate a discharge pressure gauge and pressure switch.

7. Liquid-filled, damping pressure gauges within the appropriate range.

8. Reducers of the concentric type shall be used downstream of the pump discharge. Air relief discharge shall be piped to an adjacent drain.

9. Isolation valves shall be provided on each pump discharge lateral and shall be:
   a) Fully flanged butterfly valve in accordance with AWWA C504, equipped with geared handwheel operator and position indicator.
   b) Fully flanged resilient wedge gate valve, rising stem, in accordance with AWWA C515 with position indicator for pipe sizes 12 inches and smaller.

10. Check valves to be installed in horizontal position shall be silent, globe style, non-slamming type.

11. Spool with welded outlet for steel pipe or manufactured tee for DIP to accommodate an air vacuum/air release valve, if required.

12. Provide flexible coupling on each discharge lateral to facilitate disassembly and removal.

13. Provide insulating flanges and gaskets at transition between dissimilar metals, as well as between pumps and underground piping.

F. Flexible Couplings: Provide between pump equipment and rigid connections to mitigate vibration, cushion shock loads, accommodate misalignment, and to facilitate disassembly and reassembly. Additional requirements are as follows:

1. Pump Suction: Couplings located between the pump inlet isolation valve and pump.

2. Pump Discharge: Couplings located between the pump and discharge check valve.

3. Provide anchors on pump and piping for longitudinal restraint.

G. Air Release Valves shall be sized per AWWA Manual M51 and conform to ANSI/AWWA C512. Provide at high points and shall be epoxy-coated inside and outside with stainless steel trim.

H. Combination or Vacuum/Air Release Valves shall be sized per AWWA Manual M51 and conform to ANSI/AWWA C512. Provide at locations

determined by the surge analysis and the Engineer, and shall be epoxy-coated inside and outside with stainless steel trim.

I. Pipe restraints shall include the following at a minimum:

1. Thrust restraints designed to resist maximum operating pressures and surge pressures.

2. Anchor rings for all pipes that penetrate walls.

3. Longitudinal restraint through flanged coupling adapters and flexible sleeve couplings.

J. Pressure Gauges: Provide standard bourdon-style oil (glycerin)-filled pressure gauges with 4-inch face, constructed of Type 316 stainless steel and equipped with stainless steel corporation stop for isolation. Typical operating conditions should register at the middle of the scale.

K. Provide piping supports and straps to keep all weight off the pump and equipment. The Engineer shall be responsible to ensure that sufficient pipe supports are provided such that no loads are transferred to equipment flanges.

11.16 Pump Motors

A. General: Motors shall comply with requirements of Chapter 7.

B. Pump Motor Material: Shall be cast iron with UL, FM, CSA, or NSF International approval required.

C. Electric motors from 5 horsepower to 400 horsepower shall be rated at 460 volts, 3-phase, 60 Hz. The COS reserves the right to modify this requirement depending upon the design and operation flexibility.

D. Soft Starters: Constant speed motors will be provided with soft start and soft stop features.

E. Ratings for electrical motors larger than 400 horsepower shall be reviewed by the COS.

F. Motors 100 horsepower and larger shall be:

1. Totally Enclosed, Fan-Cooled (TEFC).

2. Premium efficiency rated as defined in NEMA MG-1.

3. Equipped with velocity transducers for vibration monitoring with alarm followed by shutdown.

4. Provided with at least two Resistance Temperature Detectors (RTDs) per phase of windings with alarm. RTDs shall be 100-ohm platinum, 3-wire type.

G. Space Heaters: Motor space heaters are not required.

H. All rotation changes (phase reversal) shall be made at the motor and not at the MCC.

I. Pump motors shall not be loaded to use more than the rated horsepower with a minimum service factor of 1.15.

J. The motor torque and locked rotor characteristics shall be specified in the NEMA standards for Design B and shall be selected to be non-overloading throughout the driven pump's full speed performance curve.

K. The motor shall be of the solid-shaft type, steel cast, and adapted to a 4-piece flanged coupling assembly that will adapt to the bowl shaft assembly.

L. Motors located indoors shall be specified for minimum 50 degree Celsius ambient temperature as recommended by the motor manufacturer.

M. Motors located outdoors shall be specified for minimum 60 degree Celsius ambient temperature as recommended by the motor manufacturer.

N. Where used in conjunction with VFDs, provide Inverter Duty Rated electric motors fully compatible with the VFDs that comply with the requirements of NEMA MG-1 Part 31.

O. Motor connection terminals or power distribution blocks shall be provided for motors over 100 horsepower.

P. Aluminum motor rotor bars are not acceptable.

Q. Motors located in below-grade facilities shall be provided with moisture sensing devices with contacts to indicate leak detection alarms.

R. Vertical Turbine Pump Motor Requirements:

1. Access: For line shaft vertical turbine pumps, a catwalk, service grating, or some type of access/maintenance platform shall be provided in order to allow servicing of the motors.

2. Prime Mover: Vertical, electric motor of premium-efficiency design, NEMA type, open drip-proof weather protected Type I, squirrel cage induction type with Class F insulation and designed for a Class B

rise, designed and applied in compliance with NEMA, IEEE, NFPA, and the NEC.

3. Drive on each pump shall be a vertical, solid shaft, high-efficiency, high thrust, non-reverse, ratchet electric motor. Each electric motor shall be designed to accept the total, unbalanced thrust force imposed by the pump.

4. Line-shaft vertical turbine pumps shall operate between a minimum of 900 rpm and a maximum of 1800 rpm. COS reserves the right to modify these minimum and maximum requirements based on operation flexibility.

S. Horizontal Split-Case Motor Requirements:

1. Motor to be close-coupled to pump.

2. Operating speed shall be a minimum of 900 rpm and a maximum of 1800 rpm. COS reserves the right to modify these minimum and maximum requirements based on operational flexibility.

3. Provide equipment safety guards to protect personnel from rotating equipment.

T. Water-cooled motors are not acceptable.

11.17 Vertical Turbine Pumps

A. General: Section applies to vertical, multistage turbine, water lubricated pump.

B. All pumps and materials shall be UL and NSF approved.

C. All lining and coating systems in contact with potable water shall protect against corrosion in accordance with Chapter 5 and meet the NSF 61 Standard.

D. The pump manufacturer shall be responsible for providing the pump, column, can, and motor.

E. Pump Cans: Provide in accordance with the following requirements:

1. Maximum velocity shall not exceed 5 fps or as specified in the latest edition of HI.

2. Provide sufficient diameter to avoid limiting or restricting the flow of water into the pump inlet.

3. Lining and coating shall be an amine-cured epoxy or fusion bonded epoxy.

4. The can shall have bolt-on flanges to allow for removal.

5. The cans shall be of sufficient diameter depth to accommodate maximum flow of pump at buildout conditions.

F. Pump Efficiency: The Engineer shall select pumps such that pumping hydraulic efficiencies are:
   a) Not less than 84 percent at design flows.
   b) Not less than 80 percent within the full operating range of the pumps.
   c) Outside the efficiency criteria, as approved in writing by the COS Public Works Director, is required for lower efficiencies

G. Bowls: Cast-iron with internal surfaces coated with 10 mils of an amine-cured epoxy or fusion bonded epoxy.

H. Impellers: Constructed from zinc-less bronze, Type 316 stainless steel or aluminum bronze; statically and dynamically balanced with Type 316 stainless steel bolting.

I. Shaft: Line shaft constructed of Type 410, 416, or 316 stainless steel with shaft and couplings in lengths not to exceed 10 feet. Size for a critical speed of 20 percent above maximum operating speed.

J. Shaft Couplings: Constructed of Type 316 or Type 416 stainless steel.

K. Shaft Lubrication: Shall be product water.

L. Shaft Seal: Flushed or flushless mechanical, split seal.

M. Line Shaft Bearings: Zinc-less bronze, Type 316 stainless steel, or aluminum bronze at each joint for open line shaft. Evaluate ceramic insulated bearings and grounding of motor shaft to mitigate corrosion due to stray current.

N. Wear Rings: Comprised of aluminum bronze, hard-faced replaceable (wear ring alloy shall not gall when used with impeller alloy).

O. Suction Bell: Cast iron, with bottom bearing and streamlined ribs, for lining and coating; see bowls.

P. Discharge Head: Fabricated steel or cast iron with appropriate thickness as determined by the Engineer and equipped with 1-1/4-inch connections for air valve, pressure switch, and drain connections.

Q. Motor shaft coupling shall be a flanged Type 316 stainless steel coupling.

R. Suction Bowl Bearings: Heavy-duty, grease lubricated, bronze sleeve type with self-contained grease lubrication system. Grease shall be approved by Food and Drug Administration for use in potable water. Grease tubes and fittings shall be Type 316 stainless steel.

S. Bowl and Suction Case Bearings: Water-lubricated, zinc-less bronze or aluminum bronze sleeves.

T. Provide a complete list of recommended spare parts and the following spare parts:

1. One complete mechanical seal.

2. One split mechanical seal rebuild kit for each pump.

U. Pump Impeller Clearance: To reduce potential for pump cavitation, the pump impeller shall be mounted a minimum of 1-1/2 times the diameter of the pump bowl away from the bottom of the pump can or as recommended by the Engineer and manufacturer based on the anticipated range of operating conditions.

11.18 Horizontal, Split-Case Pumps

A. General: Section applies to horizontal, split-case, water lubricated pumps.

B. All pumps and materials shall be UL and NSF approved.

C. All lining and coating systems in contact with potable water shall protect against corrosion in accordance with Chapter 5 and meet the NSF 61 Standard.

D. The pump manufacturer shall be responsible for providing the pump and motor.

E. Pump Efficiency: The Engineer shall select pumps such that pumping hydraulic efficiencies are:

1. Not less than 84 percent at design flows.

2. Not less than 80 percent within the full operating range of the pumps.

3. Pump efficiencies that do not meet the minimum values must be approved in writing by the COS Public Works Director.

F. Casing: Provide in accordance with the following requirements:

1. Cast iron or cast steel.

2. Tested to 150 percent of maximum system pressure.

G. Impeller: Enclosed, single suction constructed of zinc-less bronze, Type 316 stainless steel, or aluminum bronze; hand finished; statically and dynamically balanced; keyed to shaft; Type 316 stainless steel bolting.

H. Shaft: Constructed of Type 410, 416, or 316 stainless steel. Size for a critical speed of 20 percent above maximum operating speed.

I. Shaft Sleeve: Type 316 stainless steel.

J. Shaft couplings: Constructed of Type 316 or Type 416 stainless steel; equipped with OSHA safety guard.

K. Shaft Lubrication: Shall be product water.

L. Shaft Seal: Flushed or flushless mechanical, split seal.

M. Wear Rings: Renewable, comprised of Type 316 stainless steel.

N. Bearing: Heavy-duty, grease lubricated, bronze sleeve type with self-contained grease lubrication system. Grease shall be approved by Food and Drug Administration for use in potable water. Grease tubes and fittings shall be Type 316 stainless steel.

O. Provide a complete list of recommended spare parts and the following spare parts:

1. Two sets of all bearings.

2. One complete mechanical seal.

3. One mechanical seal rebuild kit for each pump.

11.19 Vibration

A. General: The Engineer shall design the pumping facility such that equipment is isolated from vibration and within the vibration limits provided herein.

B. Vibration Testing: Require field vibration tests for a representative sample of pumps as determined by the COS. Vibration measurements taken during performance testing shall be made with calibrated instruments with

certification of National Bureau of Standards (NBS) traceable reference vibration sources.

C. Vibration Limits for horizontal and vertical centrifugal pumps not exceed those delineated by the Hydraulic Institute (HI) or included in this section.

D. Horizontal Pump Vibration Limits:

1. For pumps over 250 horsepower with sleeve bearings:
   a) Maximum allowable radial shaft vibration at maximum speed shall not exceed 2.0 Mil peak-to-peak throughout the full operating range, which applies only when the pump control valve is fully open.
   b) Maximum allowable radial shaft runout roll speeds of less than 100 rpm shall be less than 0.25 mils peak-to-peak radically, 0.5 mils peak-to-peak, axially.

2. Maximum allowable bearing housing vibration at full operating speed shall be 0.12 IPS RMS (Root-Mean-Square) throughout the normal operating flow range, which applies only when the pump control valve is fully open. The maximum allowable transient bearing housing vibration shall be 0.40 IPS (RMS) throughout the normal startup and shutdown speed range.

E. Vertical Pump Vibration Limits:

1. Limits shall be laterally (horizontally) not more than 3.5 mils peak-to-peak displacement and not more than 0.15 inches per second RMS velocity measured in any direction at the motor base flange.

2. Displacement and velocity measurements shall be unfiltered, and the pump shall be operating at maximum speed and at any flow within the rated range of the pump.

3. Field vibration levels, with pump control valve fully open, shall also be reported for the thrust bearing at the top of the motor. Acceptance limits for vibration at the motor thrust bearing shall be calculated based on the distances of the motor base flange and the motor thrust bearing above the discharge head soleplate as follows:

   $$Au=3.5 + 6.64 \times \log10 (D1/Db)$$

   Where: Au = unfiltered displacement, mils peak-to-peak

   D1 = distance to thrust bearing, inches

   Db = distance to motor base, inches

11.20 Heating, Ventilation, Air Conditioning (HVAC)

A. General: Provide HVAC systems for all electrical rooms, occupied spaces, and mechanical rooms, which meet requirements of Chapter 9.

11.21 Signage

A. Each pump station site shall be identified with a sign mounted on the exterior of the masonry perimeter wall adjacent to the site access gates. Exact location will be determined by the site layout on a case-by-case basis.

B. Traffic control signs shall be provided as needed per ADOT and the EDS.

11.22 Access Gates

A. Access to the pump station site shall be through a minimum 20-foot wide steel frame rolling gate. Provide sufficient space for maintenance vehicles to park out of traffic and adequate sight distance to safely enter and exit the site.

B. Gates shall be manual or automatic as determined by site security requirements. Manual gates will be provided with spare conduit for future automatic operation and security features.

C. Pull force: The maximum pull force for opening or closing manual gates is 50 pounds.

D. Automatic gates and provisions for future security features shall meet the requirements of the most current COS Security Master Plan.

E. At a minimum, one 4-foot wide pedestrian access gate, which locks from the exterior, will be provided.

F. Provide separate access for utility power to the service entrance station and meter with internal security fence to separate these from the rest of the facility in accordance with Chapter 7, Section 7.20.

11.23 Security

A. At a minimum, an 8-foot tall masonry perimeter wall with locked entrance shall be provided around the site. The perimeter wall will:

1. Be compatible with the surrounding environment, including landscaping.

2. Satisfy all COS architectural and other Community Development requirements for appearance, colors, and coatings.

B. All other security issues shall be addressed by the Engineer, which include items described in the latest version of the most current COS Security Master Plan.

11.24 Noise Attenuation

A. General: Maximum noise levels in working environments are regulated under the federal Occupational Safety and Health Act (OSHA). OSHA requirements as well as local, state, and federal regulations shall be included in the design of all facilities to mitigate noise levels. Noise discussed herein applies to both pump station facilities and facility boundaries.

B. Noise due to construction or operation of pump stations shall meet the requirements of the COS Unified Development Code. Examples of noise include the following:

1. Operating equipment such as pumps, standby generators, HVAC, and compressors.

2. Construction and maintenance activities such as operating tools and construction equipment.

C. Facility Noise Production Studies: The Engineer shall complete a Noise Production Study for all pumping stations located near residential or commercial areas or if required by the COS.

D. Noise Limits: The Engineer shall comply with the following noise limits:

1. Less than 90 dBA at a distance of five feet from the motor.

2. Less than 65 dBA outside of exterior walls.

E. Engineering Noise Controls: The Engineer is responsible for all engineering noise controls for pump stations, which shall mitigate noise to appropriate levels. Use of an experienced acoustical engineer may be required. Examples of engineering controls include:

1. Sound enclosures and/or insulated rooms for equipment.

2. Selection of pump and air compressor equipment.

3. Selection of HVAC equipment, inlets, outlets, and duct.

4. Use of sound barriers, sound traps, acoustical shrouding, and/or insulation.

5. Incorporating additional dead space at doorways and windows.

11.25 Support Systems

A. Backflow Prevention: Provide approved backflow protection devices to avoid potential contamination. If the backflow prevention device is mounted adjacent to a wall, it shall be mounted a minimum of 24 inches away and no greater than 3-feet high to allow for maintenance. Provide backflow prevention for the following water sources:

1. Potable Water.

2. Reclaimed Water.

B. Service Water: Provide for housekeeping and landscaping in accordance with the following:

1. Supply from potable water or approved reuse water source.

2. Where potable water is source, provide an approved backflow prevention.

3. Provide 3/4-inch hose bibs with vacuum breaker, galvanized or epoxy-coated steel hose rack with 50 feet of 3/4-inch rubber hose.

4. Provide a water meter located on the exterior of the site perimeter wall.

C. Drain System: Provide floor drains, hub drains, floor sinks for drainage of air relief valves, seal water, condensate, and housekeeping as follows:

1. Sanitary sewers are required at all Water Pump Stations and shall be gravity type with minimum slope of 0.007 ft/ft.

2. Drain piping shall be PVC or cast iron.

3. Provide cleanouts and vents in accordance with currently adopted plumbing code.

4. Discharge to sanitary sewer in a manner that is compliant with currently adopted codes.

5. Sump pumps, where required, shall be duplex type submersible and equipped with the following:
   a) Ductile iron or PVC discharge piping
   b) Type 316 stainless steel lifting chain
   c) Discharge check valve
   d) Float level controls
   e) High water level alarm will annunciate to SCADA

f) Aluminum grating or treadplate cover.

D. Telephones and Communications: Pump stations shall be supplied with a telephone board and appropriate size and number of conduit for telephone and security wiring in accordance with the following:

1. Conduits shall be extended to suitable junction box outside the pump station facility.

2. Submit approved telephone company drawings as part of project as-built drawings.

3. Coordinate design with current COS Security Master Plan.

E. Freeze Protection: Provide heat tracing and insulation for water piping less than 4 inches in diameter and/or chemical piping located outdoors that is subject to freezing temperatures in accordance with the following:

1. Heat Tracing: Suitable for 120 VAC/60 Hz/1 Ph power, equipped with a controller and designed to maintain the desired temperature for a useful life of 20 years. Heat tracing shall be in accordance with IEEE P515 - Testing, Design, Installation, and Maintenance of Electrical Resistance Heat Tracing for Industrial Applications and IEEE 622 - Design & Installation of Electric Heat Tracing.

2. Pipe Insulation: Closed cell, elastomeric foam insulation suitable for temperatures of 0 degrees Fahrenheit to 220 degrees Fahrenheit. Provide UV resistant.

F. Compressed Air Systems: Where required by the COS, the Engineer shall determine the plant air demand for each individual pump station facility. Compressed air shall be used for surge tanks, maintenance air tools, etc. The capacity of the air compressors for the surge tank system shall include sufficient capacity for air tools. The plant air system shall consist of the following:

1. Lubricated motor-driven air compressors.

2. Air or liquid-cooled aftercooler.

3. Coalescing filter.

4. Air receiver.

5. Pressure switches, relief valves, pressure-reducing valves with bypasses.

6. Condensate removal system shall consist of timer-controlled solenoid valve.

7. Air tool outlets, filters, pressure regulators, and lubricators.

8. Where plant air usage is considered critical (like surge tank makeup air), a redundant compressor unit should be installed. The compressors shall be reciprocating type with ASME-approved receiver.

9. Air piping shall be designed with a separate piping header to each type of service to ensure that equipment will maintain an uninterrupted supply of compressed air.

G. Restroom Facilities: Where required by the COS, provide toilet, service sink, mop sink, and lavatory facilities. The Engineer must address the handling and disposal of the wastewater generated, which shall be in accordance with ADEQ and COS requirements.

H. Other Support Systems: Systems not specifically addressed herein, such as restroom facilities and compressed air system, may be required and will be evaluated by the COS on a project-specific basis.

11.26 Fire Protection

A. Fire protection measures for pump stations shall be designed in accordance with COS, IBC, and IFC requirements.

B. Fire hydrant(s) shall be provided with approved backflow prevention device for fire protection in accordance with requirements of the COS Fire Department.

C. Fire alarm systems, which annunciate to SCADA are required for facilities with occupied spaces such as offices and control rooms.

11.27 Chlorination Provisions

A. General: All chlorination facilities shall meet the requirements of Chapter 6.

B. Selection of Sodium Hypochlorite System: The Engineer shall consider liquid hypochlorite and onsite hypochlorite generation, and perform an evaluation to determine the most economical and reliable type of sodium hypochlorite system to be used. During the evaluation, the Engineer shall receive input from the local chemical supplier(s) to assess operational issues such as off-gassing, availability, and cost.

C. Chlorination storage and feeding system shall be provided by a single vendor in accordance with this section and where required. The system shall use commercially available sodium hypochlorite solution or onsite hypochlorite generation and shall consist of the following at a minimum:

1. Bulk storage tanks with secondary containment and local, as well as remote, level indication in accordance with Chapter 6.
2. Chemical metering pumps in accordance with Chapter 6.
3. Residual chlorine analyzers in accordance with Chapter 8.
4. Sodium hypochlorite injection diffusers, piping, valves, electrical systems, and controls.
5. All equipment shall be constructed of materials compatible with sodium hypochlorite solution.
6. Provision for using temporary bulk sodium hypochlorite tote where onsite sodium hypochlorite generation facilities are proposed.

D. Capacity: The capacity of the chlorination system shall be based on maximum discharge rate for the pump station, or designed to increase the residual free chlorine of the total reservoir volume from 0.2 mg/L to 1.2 mg/L in a 24-hour period, whichever is greater.

E. Points of Injection: The system shall be designed for a capacity of sufficient magnitude to maintain a residual free chlorine at the end of the distribution network of 0.5 mg/L to 1.0 mg/L. Sodium hypochlorite solution injection points shall be provided at the reservoir inlet, as well as reservoir outlet with ‘feed-forward’ and ‘trim back’ configuration. Provide additional injection points at the pump station suction or discharge manifold.

F. Chemical Solution Piping: Chemical solution piping shall be uncoated, Schedule 80 polyvinyl chloride (PVC) pipe. All isolation valves shall be PVC diaphragm valves with either union or flanged ends; buried underground chemical piping non-metallic type.

G. Storage Tanks or Totes: Chemical storage tanks or totes shall be provided based on 30 days of consumption, which meet the requirements of Chapter 6, equipped with secondary containment and secondary containment sump.

H. Safety: Eyewash/shower units shall be provided as required by Chapter 6.

I. Chemical Metering Pump: Chemical metering pumps for sodium hypochlorite solution service shall be provided as required by Chapter 6.

J. Residual Chlorine Analyzers: Shall be provided to sample chlorine residual as appropriate for controlling chlorine residual and equipped with 4-20 mA analog output. Discharge drainage from analyzers to sanitary sewer or back into pipe.

11.28 Analog Instrument Provisions

A. Provisions for other analog instruments such as ORP analyzers and pH analyzers will be included per COS requirements.

B. Analog instruments shall meet the requirements of Chapter 8.

11.29 Electrical Systems

A. Electrical systems such as Motor Control Centers, lighting, wire, and conduit panels shall be designed in accordance with Chapter 7.

B. Service Entrance Access: Provide separate access at service entrance to provide access power meters in accordance with Chapter 8.

C. Site Lighting: Three levels of site lighting shall be provided as follows to maintain security in accordance with the COS Security Mater Plan:

1. Dusk to dawn lighting.

2. Motion detection for security.

3. Switched lighting for maintenance purposes.

D. Exposed raceways shall be rigid steel conduit, flexible liquid tight conduit in non-corrosive areas; exposed raceways shall be plastic-coated rigid steel conduit, flexible liquid tight conduit in corrosive areas; underground conduits shall be plastic conduit with plastic-coated steel conduits for all bend greater than 45 degrees and all risers shall be encased in a concrete reinforced duct bank.

1. Boxes available for use are pull boxes, junction boxes, outlet boxes, and terminal boxes, and shall be of the same type material as that of the conduit system.

2. The wire and cable used shall be 600 volt and single conductor, type XHHW 2. Nameplates shall be provided on each electrical panel, motor starter, and control device.

3. Underground, non-metallic, utility marking tape shall also be provided.

4. All conduit on aboveground tank exterior wall shall be located behind the tank roof access ladder or stairway for security.

5. Pull boxes shall be identified with COS marking.

E. Standby Power: Pump station power distribution systems shall be designed with redundant or standby power in accordance with Chapter 7 such that:

1. Disruptions in electrical service are limited to no more than 30 minutes where more than one MCC is associated with critical facilities.

2. Standby generators shall be designed to operate in the event utility power is lost as follows:
   a) Start with an automatic transfer switch to standby generator and back to utility power.
   b) Operate pump stations at firm pumping capacity for not less than 24 hours with the smallest pump out of service and without load shedding.
   c) Provide fuel storage for a minimum of 24 hours of operation
   d) Equipped with automatic exercise function and cool down feature that load tests the generator once per week or as recommended by the generator manufacturer.

11.30 Instrumentation and Control

A. The Engineer shall prepare a comprehensive controls strategy for the facility with the technical specifications for all SCADA, PLC, and associated instrumentation in accordance with Chapter 8.

B. Instrumentation shall meet the requirements of Chapter 8, which includes switches, level measurement, and pressure measurement.

C. Provide a single integrator or subconsultant to be responsible for all PLC programming, and SCADA per Chapter 8 requirements.

D. The Engineer shall also require that the integrator provide detailed description of each operation for every loop associated with the facility.

E. All SCADA and PLC programming will be provided with software licenses, as well as unrestricted access so that the COS can modify as needed.

F. Pump Controls, Alarms, and Monitoring: Instrumentation and switches for controls, monitoring, and alarms to SCADA shall be provided according to the requirements of Chapter 8. Provide the following for each pump:

1. START/STOP function from remote workstation.
2. AUTO or MANUAL operation from remote workstation, where pump speed can be adjusted manually in 'MANUAL' mode.
3. AUTO or HAND mode of operation indication at SCADA.
4. RUN or STOP status indication at SCADA.
5. Pump speed indication at SCADA.
6. HIGH TEMPERATURE alarm indication at SCADA.
7. HIGH DISCHARGE PRESSURE alarm indication at SCADA.
8. VFD FAULT alarm indication at SCADA.
9. ALARM reset command function from remote workstation.

G. Surge Tank Controls, Alarms, and Monitoring: Instrumentation and switches for controls, monitoring, and alarms to SCADA shall be provided in accordance with requirements of Chapter 8. Provide the following:

1. HIGH DISCHARGE PRESSURE indication.
2. LOCAL /OFF/AUTO selector switch for air compressor as follows:
   a) LOCAL enables control at the air compressor control panel with LOCAL mode displayed at SCADA.
   b) OFF shuts off compressor in all modes of operation with OFF mode displayed at SCADA.
   c) AUTO enables automatic control by PLC with AUTO displayed at SCADA.
   d) RUN status indicated at SCADA if air compressor is operating in any mode.
   e) FAILURE alarm status indication at SCADA if compressor fails to operate in any mode of operation.
3. Surge tank liquid level alarms as follows:
   a) HIGH LEVEL alarm indication
   b) LOW LEVEL alarm indication

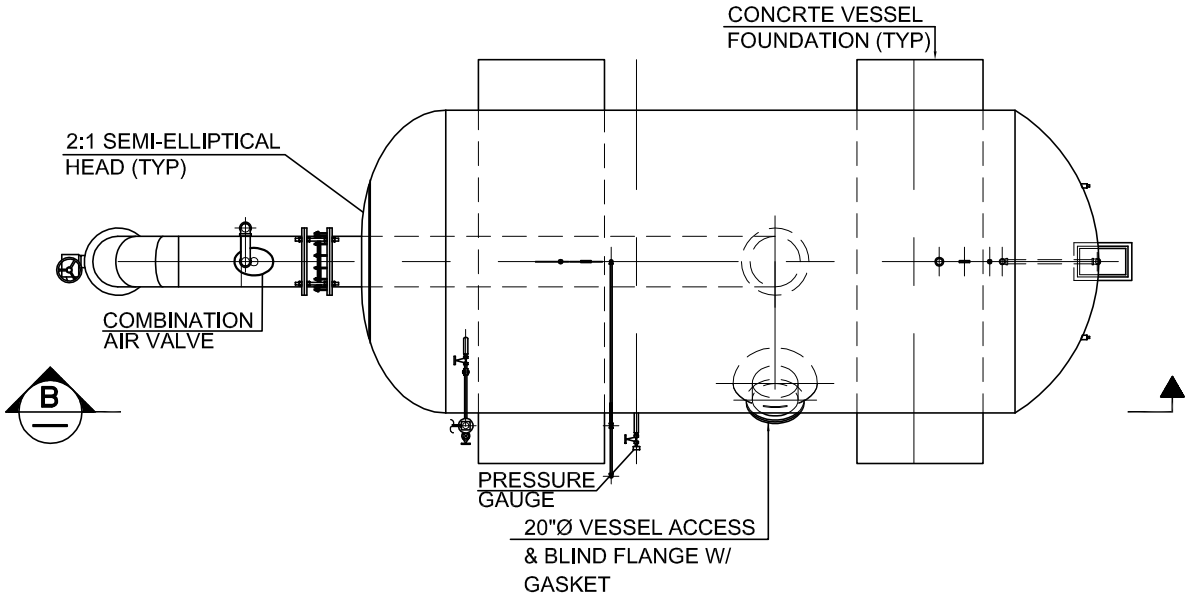

PLAN
NTS
A

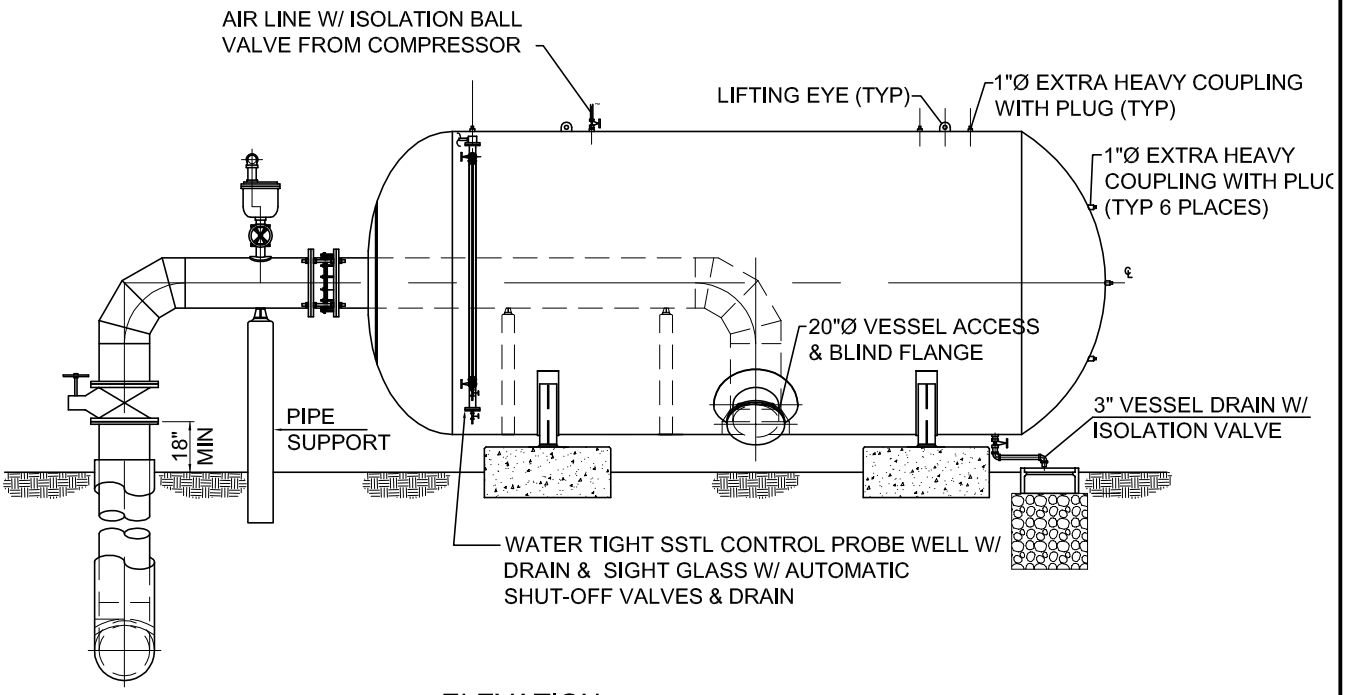

ELEVATION
NTS
B

FINAL

REVISIONS	DWN	APVD	APVD	DATE

CITY OF SURPRISE

Maricopa County, Arizona

Water and Wastewater Guidelines

DESIGNED JBR
DRAWN JLS
CHECKED
APPROVED
APPROVED
DATE APRIL 2011

SURPRISE
ARIZONA

SURGE TANK
DETAILS

SCALE

FIGURE	REV.
11.1	0

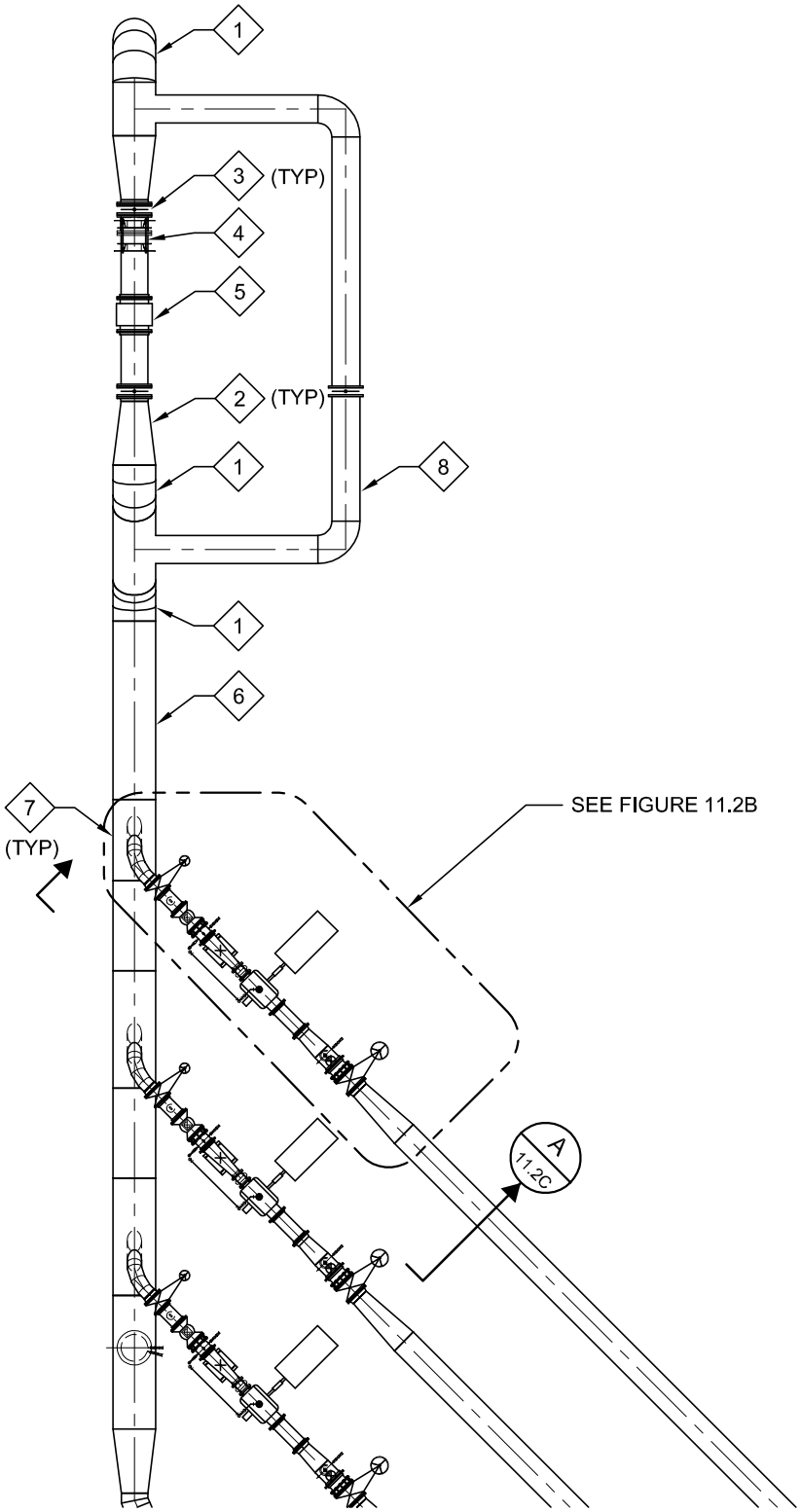

KEY NOTES

1. 90° BEND
2. REDUCER
3. BUTTERFLY VALVE
4. RESTRAINED HARNESS CPLG
5. MAGNETIC FLOW METER W/ SUFFICIENT UPSTREAM & DOWNSTREAM PIPE LENGTHS
6. DISCHARGE HEADER
7. WYE
8. FLOW METER BYPASS

FINAL

REVISIONS	DWN	APVD	APVD	DATE

CITY OF SURPRISE

Maricopa County, Arizona

Water and Wastewater Guidelines

DESIGNED JBR
DRAWN PAT
CHECKED
APPROVED
APPROVED
DATE APRIL 2011

SURPRISE
ARIZONA

PUMP STATION
MECHANICAL PLAN

SCALE

FIGURE	REV.
11.2A	0

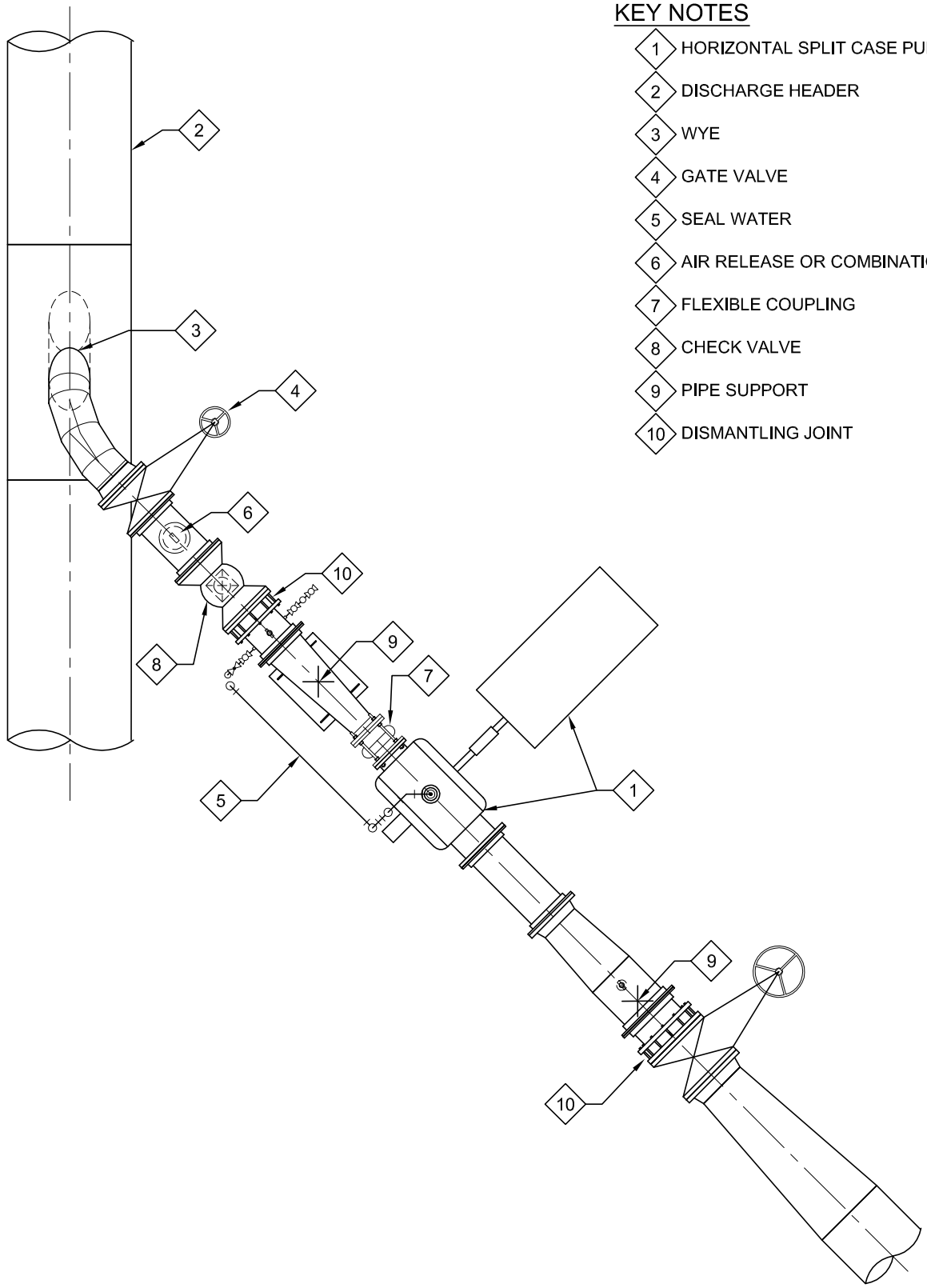

KEY NOTES

1. HORIZONTAL SPLIT CASE PUMP AND MOTOR
2. DISCHARGE HEADER
3. WYE
4. GATE VALVE
5. SEAL WATER
6. AIR RELEASE OR COMBINATION VALVE
7. FLEXIBLE COUPLING
8. CHECK VALVE
9. PIPE SUPPORT
10. DISMANTLING JOINT

FINAL

REVISIONS	DWN	APVD	APVD	DATE

CITY OF SURPRISE

Maricopa County, Arizona

Water and Wastewater Guidelines

DESIGNED JBR
DRAWN PAT
CHECKED
APPROVED
APPROVED
DATE APRIL 2011

SURPRISE
ARIZONA

PUMP STATION
MECHANICAL PLAN
PUMP LAYOUT

SCALE

FIGURE	REV.
11.2B	0

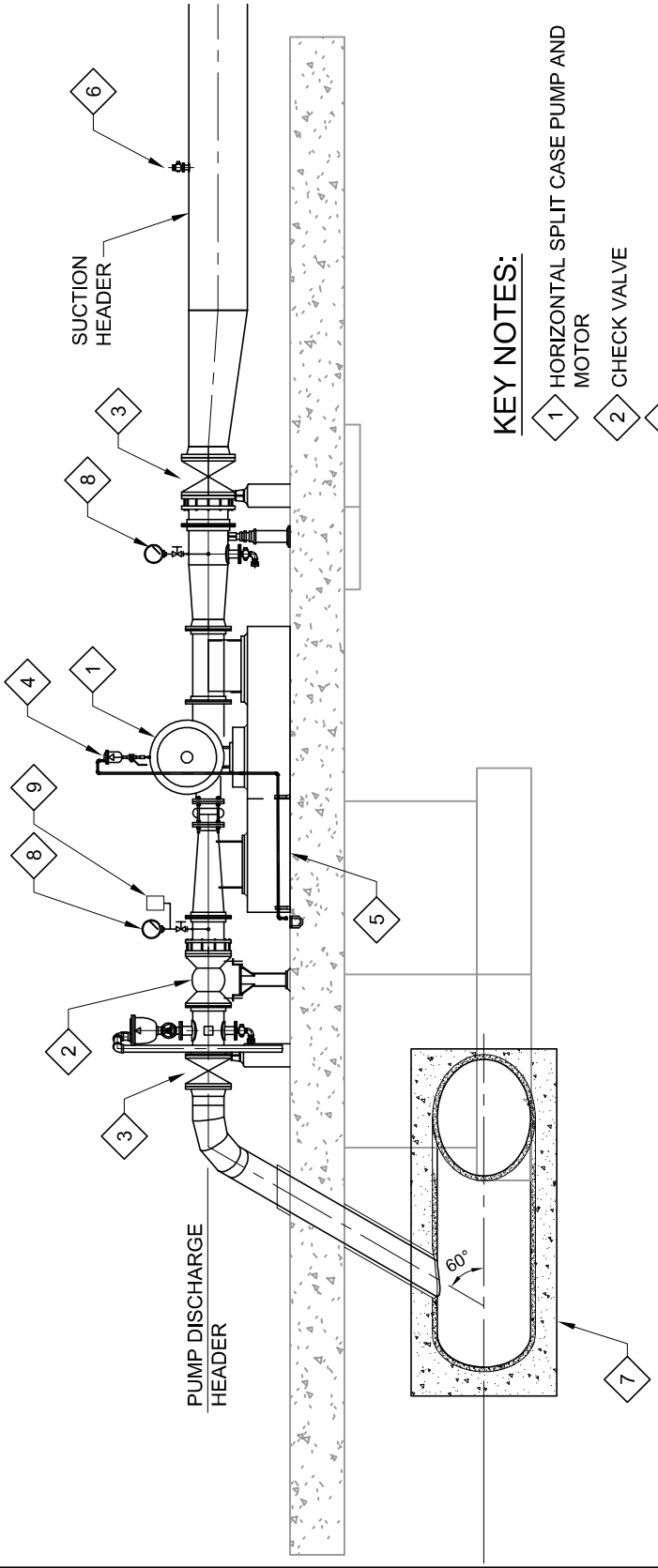

KEY NOTES:

1. HORIZONTAL SPLIT CASE PUMP AND MOTOR
2. CHECK VALVE
3. GATE VALVE
4. AIR RELEASE OR COMBINATION VALVE
5. EQUIPMENT PAD
6. CORPORATION STOP
7. CONCRETE ENCASEMENT IF TRAFFIC LOADING IS EXPECTED
8. PRESSURE GAUGE
9. HIGH PRESSURE SWITCH

FINAL

REVISIONS	DWN	APVD	APVD	DATE

CITY OF SURPRISE

Maricopa County, Arizona

Water and Wastewater Guidelines

DESIGNED JBR
DRAWN PAT
CHECKED
APPROVED
APPROVED
DATE APRIL 2011

SURPRISE ARIZONA

PUMP SECTION

SCALE

FIGURE	REV.
11.2C	0

KEY NOTES

1. SUCTION PIPE
2. DISCHARGE HEADER
3. WYE
4. GATE VALVE OR BUTTERFLY VALVE
5. FLOW METER BYPASS
6. SURGE TANK (REF FIGURE 11.1)

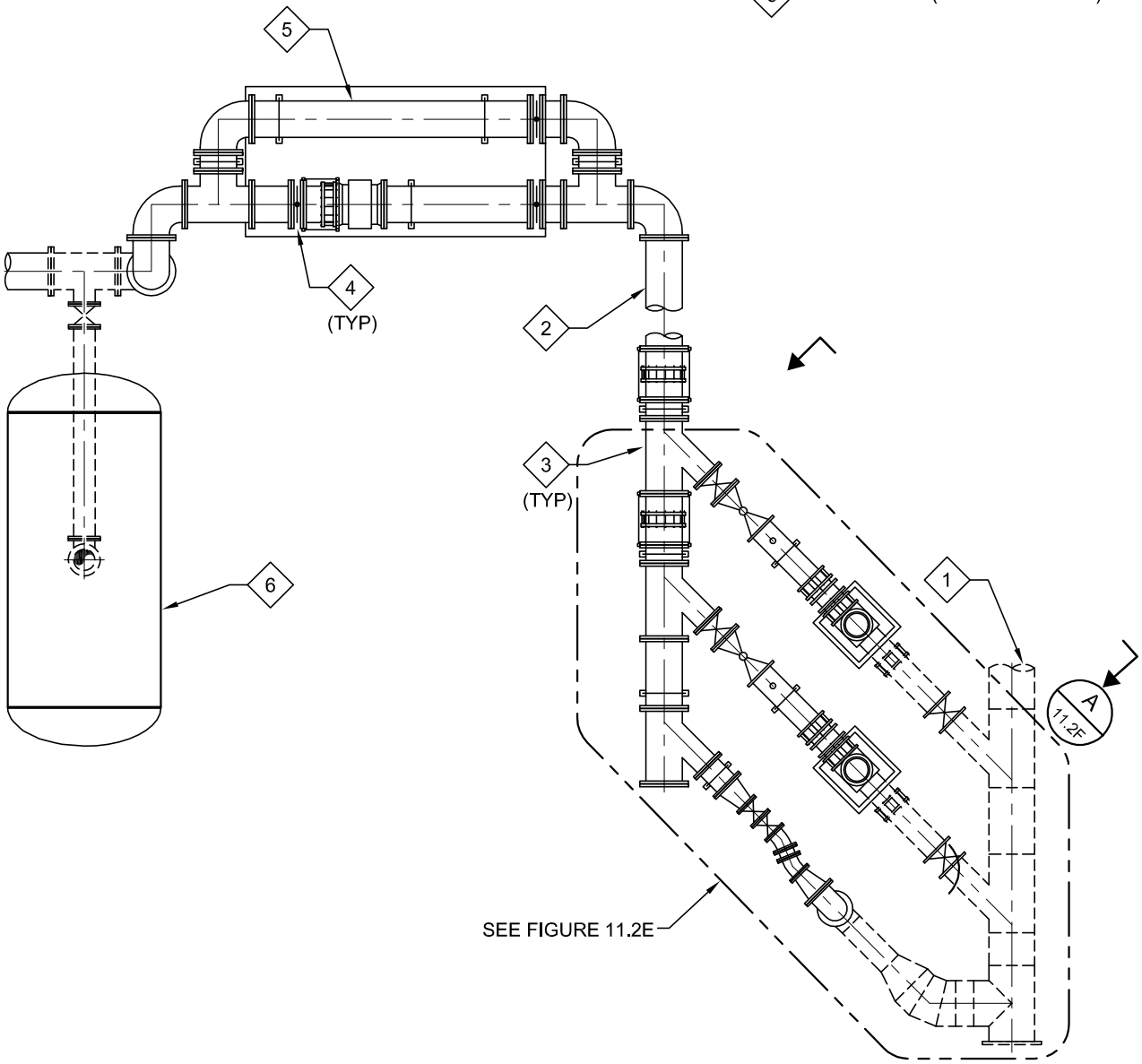

FINAL

REVISIONS	DWN	APVD	APVD	DATE

CITY OF SURPRISE

Maricopa County, Arizona

Water and Wastewater Guidelines

DESIGNED JBR
DRAWN PAT
CHECKED
APPROVED
APPROVED
DATE APRIL 2011

SURPRISE
ARIZONA

PUMP STATION
MECHANICAL PLAN
VERTICAL PUMP LAYOUT

SCALE

FIGURE	REV.
11.2D	0

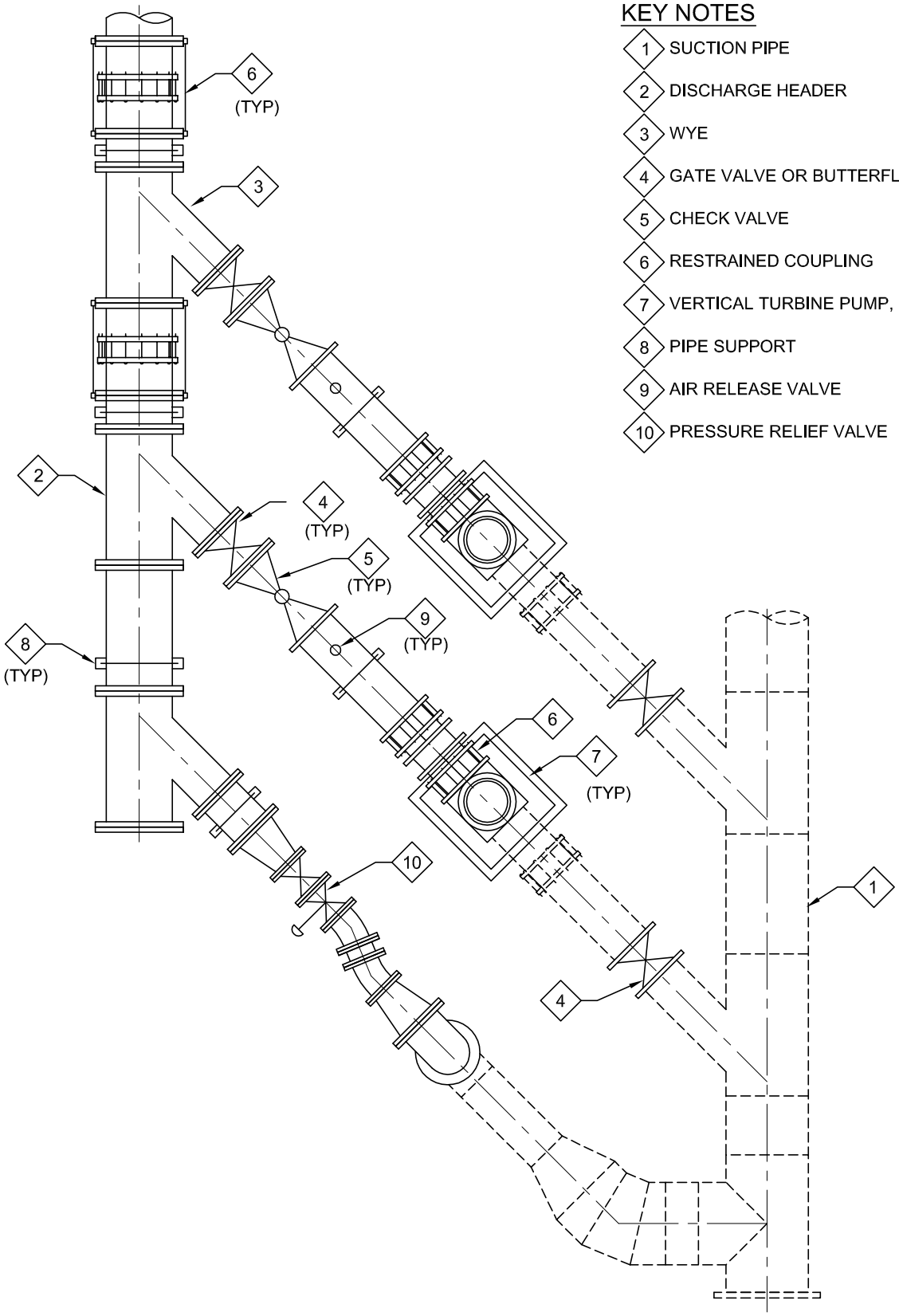

KEY NOTES

1. SUCTION PIPE
2. DISCHARGE HEADER
3. WYE
4. GATE VALVE OR BUTTERFLY VALVE
5. CHECK VALVE
6. RESTRAINED COUPLING
7. VERTICAL TURBINE PUMP, BASE & BARREL
8. PIPE SUPPORT
9. AIR RELEASE VALVE
10. PRESSURE RELIEF VALVE

FINAL

REVISIONS	DWN	APVD	APVD	DATE

CITY OF SURPRISE

Maricopa County, Arizona

Water and Wastewater Guidelines

DESIGNED JBR
DRAWN PAT
CHECKED
APPROVED
APPROVED
DATE APRIL 2011

SURPRISE
ARIZONA

PUMP STATION
VERTICAL PUMP LAYOUT
ENLARGED PLAN

SCALE

FIGURE	REV.
11.2E	0

KEY NOTES

1. SUCTION PIPE
2. PIPE TO DISCHARGE HEADER
3. VALVE BOX W/ STEM EXTENSION
4. GATE OR BUTTERFLY VALVE
5. CHECK VALVE
6. RESTRAINED COUPLING
7. VERTICAL TURBINE PUMP, BASE & BARREL
8. PIPE SUPPORT
9. AIR RELEASE VALVE
10. CONCRETE ENCASE IF TRAFFIC LOADING IS EXPECTED

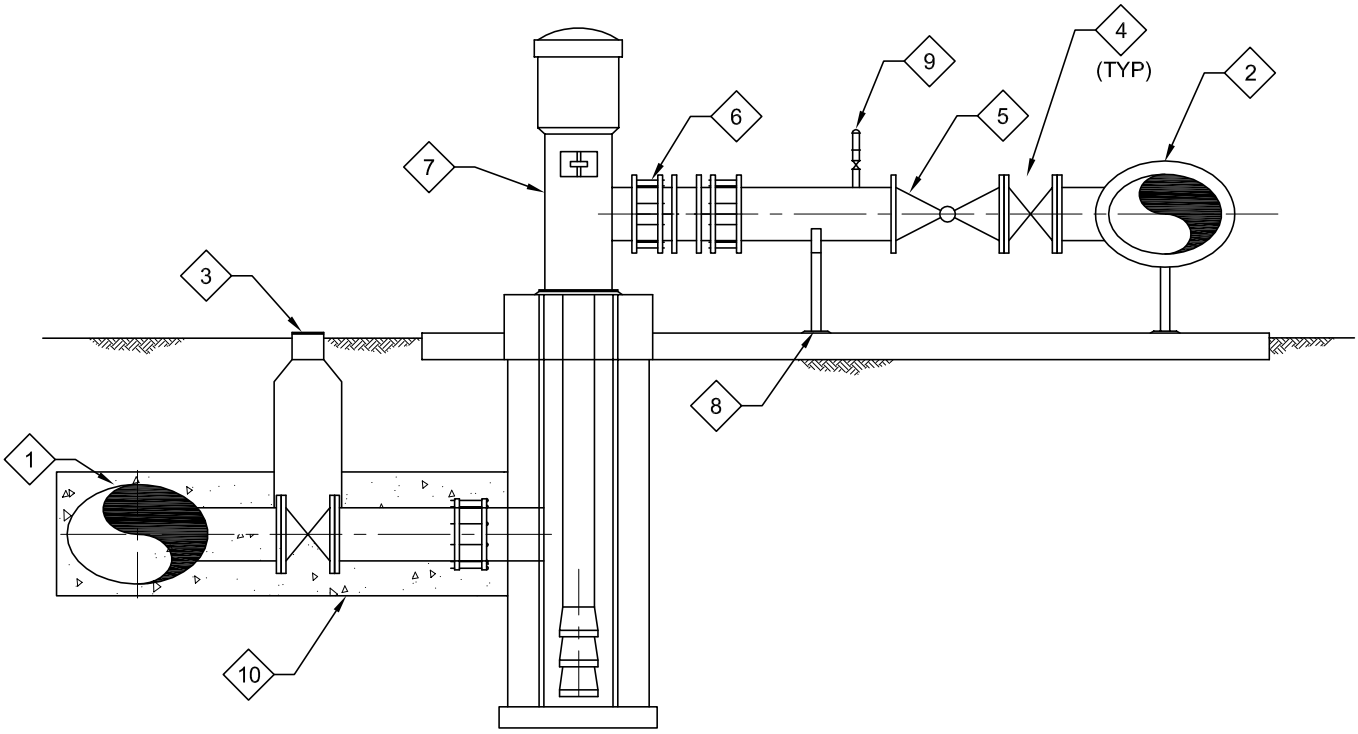

FINAL

REVISIONS	DWN	APVD	APVD	DATE

CITY OF SURPRISE

Maricopa County, Arizona

Water and Wastewater Guidelines

DESIGNED JBR
DRAWN PAT
CHECKED
APPROVED
APPROVED
DATE APRIL 2011

SURPRISE
ARIZONA

PUMP STATION
VERTICAL PUMP LAYOUT
SECTION

SCALE

FIGURE	REV.
11.2F	0

CHAPTER 12 PRESSURE REDUCING STATIONS

12.01 General

A. This chapter delineates the standards and guidelines for designing a pressure reducing station (PRS), which is defined as a facility used to convey water from a higher pressure zone to a lower pressure zone via one or more pressure reducing valves.

B. PRS Classifications:

1. Aboveground PRS: The COS standard is an aboveground PRS, which is comprised of an aboveground pipe manifold with valves and accessories constructed in the field by the Contractor based on the Engineer's design. Aboveground PRSs require approval by the COS on a project-specific basis.

2. Buried PRS: A buried PRS is comprised of either a cast-in-place or a precast concrete vault, with piping, valves, and accessories constructed in the field by the Contractor based on the Engineer's design. Buried PRS requires specific approval by COS on a project-specific basis.

3. Packaged PRS: A packaged PRS includes all interior piping, valves, and accessories, pre-assembled by a supplier within a pre-cast concrete vault or steel capsule. Connections are made by the Contractor in the field. Packaged PRSs require approval by the COS on a project-specific basis.

12.02 Site Considerations

A. General: The location of PRS shall be generally within the street right-of-way (ROW) or within an existing utility easement.

B. The COS standard is for PRS to be placed adjacent to the sidewalk or curb and gutter if there is no sidewalk.

C. Proposed PRS locations in unpaved or paved surface of roads require COS approval in writing.

D. Provide sufficient access for maintenance vehicles, cranes, and rigging for equipment installation and removal.

E. Maintain site security in accordance with the latest COS Security Master Plan.

12.03 Concept Design Review (CDR) Phase

A. General: The CDR of the project shall be summarized and presented in a CDR report. The report will be submitted to the COS for review and acceptance. The CDR is the basis for the subsequent design process and must include the following at a minimum:

1. Executive Summary.
2. Table of Contents.
3. Project Background.
4. Description of property ownership, right-of-way, and easement information (per Chapter 1).
5. Draft Traffic Study.
6. Draft Drainage Study.
7. Draft Geotechnical Investigation Report.
8. Draft Environmental Investigation Report.
9. Draft Corrosion Control/Cathodic Protection Report.
10. PRS classification (buried PRS, packaged PRS, or aboveground PRS).
11. Hydraulic analysis of pressure zones.
12. Preliminary pressure-reducing valve sizing and supporting calculations.
13. Description of security features in accordance with the current COS Security Master Plan.
14. Preliminary drawings (30 percent) that include the following:
    a) Civil Grading Plan with proposed grading and drainage improvements.
    b) Civil Yard Piping Plan with major yard piping, connections, and grading.
    c) Permanent and temporary right-of-way, and easements and constraints.
    d) PRS Mechanical Plan with major piping, valves, fittings, and dimensions.
    e) Utility power location.

15. Summary of major stakeholders and utilities with contact information for each.

16. Summary of Quality Level A subsurface utility location data in accordance with ASCE *Standard Guideline 38-02 for the Collection and Depiction of Subsurface Utility Data*.

17. Summary of permit requirements and submittals.

18. Proposed project schedule with milestones for:
    a) Design completion
    b) Bid date
    c) Construction.

19. Preliminary cost estimate.

12.04 Agency and Utility Coordination

A. The Engineer shall initiate contact and coordinate efforts with outside utilities and agencies in accordance with Chapter 1.

12.05 Final Design Phase

A. General: The Engineer shall provide a Final Design with progress submittals to the COS at 60 percent and 90 percent level of completion in accordance with Chapter 1, which builds upon work completed during the CDR. The Final Design shall include:

1. Final design drawings.

2. Final specifications.

3. Details of security features in accordance with the current COS Security Master Plan.

4. Final cost estimate.

5. Final drawings and specifications shall meet the general requirements presented in Chapter 1.

6. Final versions of all studies and reports submitted with the CDR.

12.06 Hydraulic Analysis

A. General: The sizing of a pressure-reducing valve shall be based on the hydraulic analysis of the zone served that considers the following at a minimum:

1. Current Water Demand Scenarios that include Average Day, Maximum Day with largest anticipated fire flow, and Peak Hour.

2. Future Water Demand Scenarios that include Average Day, Maximum Day with largest anticipated fire flow, and Peak Hour.

B. Basis of Design: Provide a minimum of two pressure-reducing valves and pressure relief valve as follows:

1. Smaller pressure-reducing valve sized to accommodate minimum day demands and peak hour demand under continuous flow conditions provided in the latest Water Master Plan that operates as follows:
   a) Open when downstream pressure drops below set point.
   b) Closes when downstream pressure recovers to pressure setpoint.

2. Larger pressure-reducing valve sized to accommodate the maximum day demand plus fire flow demands that operates as follows:
   a) Open when the downstream pressure drops 5 psig from the target pressure setpoint.
   b) Closes when downstream pressure recovers to pressure setpoint.

3. Pressure relief valve that operates as follows:
   a) Opens when downstream pressure increases to 10 percent above the setpoint pressure.
   b) Closes when downstream pressure decreases to pressure setpoint.

4. Piping Velocity: The pipe velocity shall not exceed 10 fps for any scenario.

C. Calculations: The design engineer shall provide supporting calculations to COS for review and approval with respect to design of the PRS and accessories, which shall include the following at a minimum:

1. Pressure-Reducing Valves: Calculations used to size the pressure-reducing valves based on flow, maximum velocity as recommended by the manufacturer, pressure drop across the valve, and cavitation.

2. Pressure Relief Valves: Calculations used to size the pressure relief valves based on flow and maximum velocity as recommended by the manufacturer.

D. Surge Analysis: Provide a surge analysis in accordance with Chapter 11, 11.07.

12.07 Structural Design

A. General: Structures shall be designed to safely support the imposed live and dead loads in accordance with requirements of Chapter 4 or this section. Loading combinations and live load reductions shall be according to the requirements/limitations set forth in the IBC. All live and dead loads used for purpose of design shall be developed for the intended use or occupancy of the particular structure.

B. Hydrostatic Loads and Lateral Soil Loading: The values for lateral soil pressures and soil-bearing pressures for below grade structures or parts of structures shall be designed in accordance with the project's geotechnical report(s)/project's geotechnical engineer.

C. Vehicle Traffic Considerations: Design structure, hatches, and manways for H20 live loads in accordance with Chapter 4. For buried PRS, provide bollards to prevent vehicle access where vehicle loads are not anticipated.

D. Buoyant Forces: Buried reinforced concrete structures shall be designed for buoyant forces imposed by the presence of groundwater based on the Geotechnical Report. The design of these structures shall include resistance to groundwater buoyant forces.

E. Lateral soil loadings shall include active soil pressures for yielding walls, at-rest soil pressures for non-yielding walls, and surcharge pressures due to a soil minimum cover of 2 feet or equal to the actual depth of the soil cover above the structure.

F. Seismic soil pressures shall be used in accordance with the Geotechnical Report.

G. For buried hydraulic structures, use high operational water level without backfill (33 percent overstress).

H. Hatches and Manways: Slope roof away from access hatches a minimum of 2 percent. Provide manways and hatches in accordance with the following:

1. Provide locking mechanism and intrusion switches on manways and hatches per the current COS Security Master Plan.

2. Manways: Constructed of cast iron, galvanized steel, or aluminum with minimum size of 30-inch x 30-inch square or 30-inch diameter circular. Square hatches shall be single or double leaf design.

3. Equipment Hatches: Constructed of cast iron, galvanized steel, or aluminum. Hatches shall be hinged single or double-leaf type and sized to remove the largest pipe, fitting, valve, or piece of equipment from the vault.

4. Lifting eyelets: Provide lifting eyelets above valves and equipment to facilitate removal.

I. Ladders: Provide galvanized steel or aluminum ladders at all manways as follows:

1. Designed in accordance with OSHA regulations.

2. Rungs designed for not less than 300 pounds applied to the middle.

3. Equipped with ladder post safety device.

J. Penetrations: Penetrations through the structure for piping, valve operators, vents, conduit, and access hatches shall provide additional reinforcement and shall be sealed to prevent moisture from entering. Provide the following features for penetrations:

1. Pipe penetrations: Provide wall thimble cast into the wall or leak-proof modular rubber link system with wall sleeve.

2. Hatches: Provide leak-proof sealant or gasket.

3. Vents: Provide leak-proof sealant or gasket.

4. Conduit: Provide grout.

K. PRS Structure Height: All buried or aboveground vaults to be provided with minimum of 7’-0” interior height.

12.08 Corrosion Control

A. General: Provide corrosion protection measures, which may include cathodic protection and protective coatings, in accordance with the Corrosion Control Report and Chapter 5 requirements.

B. Concrete Coatings: Provide protective coatings as follows unless Type V ASTM C150 portland cement is used:

1. Buried, Exterior Waterproofing: Polyurethane, acrylic, and coal-tar epoxy.

2. Submerged: Polyurethane, acrylic, and coal-tar epoxy.

3. Surface preparation, number of coats, and coating thickness per Corrosion Control Report.

C. Steel Coatings: Provide protective coatings as follows:

1. Buried: Polyurethane, amine-cured epoxy, and coal-tar epoxy.

2. Exposed: Polyurethane, amine-cured epoxy, and coal-tar epoxy.

3. Surface preparation, number of coats, and coating thickness per Corrosion Control Report.

12.09 Drainage Sump

A. Provide sufficient floor slope to a sump with suitable for a portable sump pump.

B. Sump to be minimum of 2-ft x 2-ft with depth of at least 12 inches. Provide filter drain type sump bottom with 4-inch layer of 1/2-inch diameter gravel.

12.10 Valves

A. Pressure-Reducing Valves: Shall automatically reduce inlet pressure to an adjustable downstream setpoint pressure, which will be maintained regardless of upstream pressure or flow fluctuations. Pressure-reducing valves shall be pilot-controlled, hydraulically operated, diaphragm actuated, globe pattern valves as follows:

1. Ductile iron body with epoxy-coated interior and exterior.

2. Nylon-reinforced, Buna-N diaphragm.

3. Single-seated with a removable seat insert.

4. Disc equipped with replaceable, resilient rubber seat with leak-proof shutoff.

5. Equipped with Y-strainer, isolation cocks, closing speed control, and opening speed control.

6. Internal trim comprised of Type 316 stainless steel.

7. Flanged ends, flat-faced conforming to the requirements of ANSI B16.42, suitable for working pressure of not less than 150 psig.

8. Control Pilot: Direct acting, adjustable, spring-loaded, normally open diaphragm valve designed to permit main valve opening when the reduced outlet pressure is less than the pilot set point. The control pilot shall be Type 316 stainless steel. All tubing and fittings shall also be Type 316 stainless steel.

9. Valve Position Indicator: An indicator rod fastened directly to the main control valve stem shall indicate valve position. The tube shall be contained within a housing, which is open on two opposite sides to permit clear vision of the indicator rod.

10. When the downstream pressure exceeds the upstream pressure, the valve shall automatically shut.

B. Pressure Relief Valves: The pressure relief valve shall be capable of automatically discharging water to reduce system pressure. Pressure relief valves shall be pilot-controlled, hydraulically operated, diaphragm type automatic control valve as follows:

1. Ductile iron body with epoxy coated interior and exterior.

2. Nylon-reinforced, Buna-N diaphragm.

3. Single-seated with a removable seat insert.

4. Disc equipped with replaceable, resilient rubber seat with leak-proof shutoff.

5. The valve shall be equipped with flow clean strainer, isolation cocks, closing speed control, and opening speed control.

6. Internal trim comprised of Type 316 stainless steel.

7. Flanged ends, flat-faced conforming to the requirements of ANSI B16.34, suitable for working pressure of not less than 150 psig.

8. Control Pilot: Direct-acting, adjustable, spring-loaded, normally closed pilot designed to close the main valve whenever the sensed pressure is below the pilot spring setting. The relief valve shall function to limit the discharge header pressure to the value set into the control pilot. The control pilot shall be Type 316 stainless steel. All tubing and fittings shall also be Type 316 stainless steel.

9. Discharge Splash Pad: Provide concrete splash pad on exterior for pressure relief valve discharge.

10. When the downstream pressure meets the pre-set value, the relief valve will shut.

C. Ball Valves: Provide manual isolation ball valves for pipe sizes 3 inches and smaller as follows:

1. Cast bronze or Type 304 stainless steel body.

2. Type 304 stainless steel or bronze ball with Type 304 stainless steel stem.

3. Reinforced Teflon stem seal that can be replaced.

4. Valve seat comprised of Buna-N or Teflon.

D. Butterfly Valves: Manual isolation butterfly valves are acceptable for pipe sizes greater than 3 inches within the vault on either side of each pressure-reducing valve and inlet and discharge headers as follows:

1. Conform to ANSI/AWWA C504.

2. Suitable for bi-directional service.

3. Cast or ductile iron body with epoxy coating of interior and exterior.

4. Cast or ductile iron disc. Disc seating edge shall be Type 316 stainless steel.

5. Shaft shall be Type 316 stainless steel, suitable for maximum torque.

6. Seats shall be EPDM that is mounted in body for sizes 24 inch and larger and bonded to the valve body for sizes smaller than 24 inch.

7. Flanged ends, flat-faced conforming to the requirements of ANSI B16.34, suitable for working pressure of not less than 150 psig.

8. Operators shall be handwheel type with 2-inch square nut equipped with position indicator. Design for not less than 300-foot pounds of input torque.

9. Provide lifting lugs for sizes 24 inch and larger.

10. Isolation Valves: Provide isolation valves on the inlet and discharge headers.

11. Buried Service: Provide the following for buried service:
    a) Valve Boxes and Valve Box Covers
    b) Two-inch AWWA nut with type 316 stainless steel valve stem extensions.

E. Gate Valves: Manual isolation resilient wedge gate valves are acceptable for sizes greater than 3 inches within the vault on either side of each pressure-reducing valve and inlet and discharge headers as follows:

1. Conform to ANSI/AWWA C515.

2. Cast or ductile iron body with epoxy coating of interior and exterior with O-ring between body and bonnet.

3. Cast or ductile iron wedge encapsulated in nitrile rubber and capable of sealing flow in either direction.

4. Rising stem configuration for exposed service and non-rising stem configuration for buried service.

5. Flanged ends, conforming to the requirements of ANSI B16.34, suitable for working pressure of not less than 150 psig.

6. Operators shall be handwheel type with 2-inch square nut equipped with position indicator. Design for not less than 300-foot pounds of input torque.

7. Provide lifting lugs for sizes 24 inch and larger.

8. Isolation Valves: Provide isolation valves on the inlet and discharge headers.

9. Buried Service: Provide the following for buried service:
    a) Valve Boxes and Valve Box Covers
    b) Two-inch AWWA nut with type 316 stainless steel valve stem extensions.

F. Surge Mitigation: Provide air release valves and combination or vacuum/air release and other surge mitigation measures in accordance with Chapter 11, Section 11.07.

12.11 Piping

A. General: Design buried and exposed piping in accordance with Chapter 9 and the requirements herein.

B. Exposed piping and joints shall be ductile iron or steel as follows; see also Figure 12.1, which illustrates locations of valves and piping:

1. Steel Pipe: Suitable for maximum operating pressure with minimum wall thickness of 0.25 inches. Provide cement mortar lining and epoxy coating in accordance with Chapter 5.

2. Ductile Iron Pipe: Class 53 or greater, cement mortar-lined and epoxy coated in accordance with Chapter 5, suitable for maximum operating pressure.

3. Provide restrained joints with Type 316 stainless steel tie rods for pressurized piping.

4. Provide corrosion protection measures as recommended by the Corrosion Control/Cathodic Protection Report and in accordance with Chapter 5.

5. All materials and coatings shall meet requirements of NSF 61.

C. Pipe Couplings:

1. All pipe couplings for pressurized piping shall be restrained.

2. Flexible couplings shall be in accordance with Chapter 11, Section 11.15.

3. Provide two flexible couplings at all pipe connections to structures, spaced to accommodate differential settlement.

4. Dismantling joints shall be provided to facilitate removal of valves as follows:
   a) Steel or ductile iron body with fusion-bonded epoxy or NSF 61 approved lining and coating.
   b) Flanged ends, flat-faced conforming to the requirements of ANSI B16.34, suitable for working pressure of not less than 150 psig.

c) Type 316 stainless steel nuts, bolts, restraining rods, and other hardware.

D. Pipe Supports:

1. Constructed of hot-dipped galvanized steel with Type 316 stainless steel hardware.

2. Horizontal pipe supports to be adjustable with carbon steel saddle and neoprene pad.

3. On either side of pressure-reducing valves.

4. On either side of isolation valves.

12.12 Ventilation

A. General: Provide passive ventilation, provisions for forced ventilation, or permanent forced ventilation of PRS facilities in accordance with NFPA 820 and Chapter 9, if required.

B. Exhaust Fan: Equipment suitable for 120 VAC/60 Hz/ 1 Ph power and designed to provide not less than six air changes per hour with passive vents located at opposite sides of the vault at different elevations to promote air circulation. The fan shall be equipped with a wall-mounted HAND/AUTO switch and proximity switch that operates as follows:

1. AUTO position: Proximity switch on manway hatch starts the fan when the manway hatch is opened and stops the fan when the manway hatch is closed.

2. HAND position: Operates the exhaust fan regardless of manway hatch being opened or closed.

12.13 Support Systems

A. Backflow Prevention: Provide approved backflow protection devices to avoid potential contamination. If the backflow prevention device is mounted adjacent to a wall, it shall be mounted a minimum of 24 inches away and no greater than 3-feet high to allow for maintenance. Provide backflow prevention for the following water sources:

1. Potable Water.

B. Service Water: Where required by the COS, provide service water for housekeeping and landscaping in accordance with the following:

1. Supply from potable water.

2. Provide an approved backflow prevention.

3. Provide 3/4-inch hose bibs with galvanized or epoxy-coated steel hose rack with 50 feet of 3/4-inch rubber hose.

4. Provide a water meter located on the exterior of the site perimeter wall.

C. Drain System: Provide floor drains, hub drains, floor sinks for drainage of air relief valves, seal water, condensate, and housekeeping as follows:

1. Sanitary sewers shall be gravity type with minimum slope of 0.007 ft/ft.

2. Drain piping shall be PVC or cast iron pipe with a slope of at least 1 percent.

3. Provide cleanouts and vents in accordance with currently adopted plumbing code.

4. Discharge to sanitary sewer in a manner that is compliant with currently adopted codes.

5. Sump pumps, where required, shall be duplex type submersible and equipped with the following:
   a) Ductile iron or PVC discharge piping
   b) Type 316 stainless steel lifting chain
   c) Discharge check valve
   d) Float level controls
   e) High water level alarm will annunciate to SCADA
   f) Aluminum grating or treadplate cover.

12.14 Electrical Systems

A. General: Design electrical systems in accordance with Chapter 7 and the requirements herein, if required.

B. Interior Lighting: Where required by the COS, provide fluorescent interior lighting as follows:

1. One or more two-tube, 32-watt per tube.

2. Enclosed and gasketed.

3. Automatically turned on via manway proximity switch.

C. Circuit breakers: Provide independent thermal-magnetic trip circuit breakers as follows:

1. Convenience receptacles.
2. Exhaust Fan (if applicable).
3. Lights.

D. Convenience Receptacles: Provide not less than 3 convenience receptacles in accordance with the following:

1. Three prong, ground fault circuit interrupter type.
2. Suitable for 120 VAC/60 Hz/1 Ph power.

E. Electrical Rating: All junction boxes, panels, and electrical devices shall be NEMA 4X rated.

12.15 Instrumentation and Control

A. General: Design instrumentation and control systems in accordance with Chapter 8 and the requirements herein.

B. The Engineer shall prepare a comprehensive controls strategy for the facility with the technical specifications for all SCADA, PLC, and associated instrumentation in accordance with Chapter 8.

C. Provide a single integrator or subconsultant to be responsible for all PLC programming and SCADA per Chapter 8 requirements.

D. The Engineer shall also require that the integrator provide detailed description of each operation for every loop associated with the facility.

E. Pressure Measurement: Pressure measurement shall be provided upstream and downstream of the pressure reducing valves as follows:

1. Located on the inlet and outlet headers between the isolation valves and the vault wall, thus ensuring pressure reading available at all times.
2. Provide a threaded connection with tee and ball isolation valve to an oil-filled pressure gauge and pressure transmitter.
3. Pipe, fittings, and tubing shall be galvanized steel or Type 304 stainless steel tubing.
4. Indicate both upstream and downstream pressures remotely to SCADA.

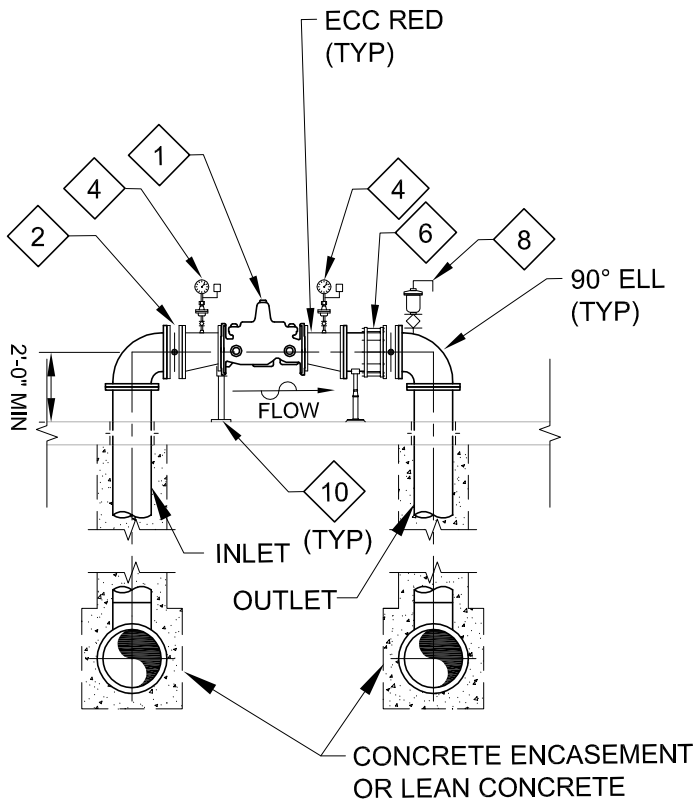

B SECTION

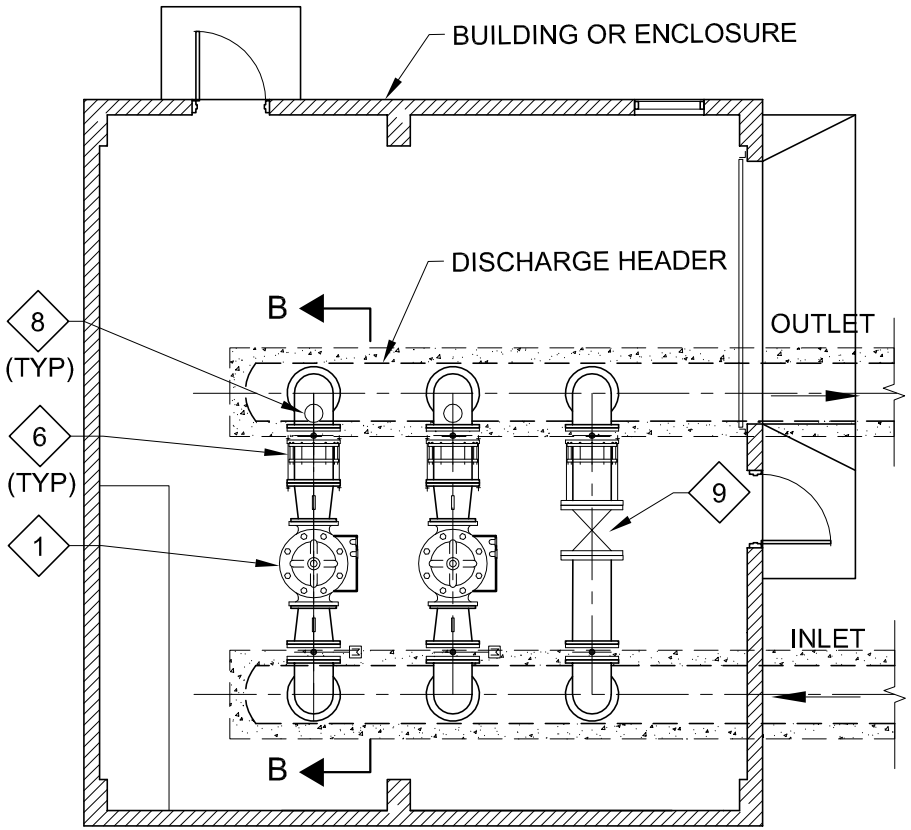

A PLAN

KEY NOTES:

1. PRESSURE REDUCING VALVE
2. BUTTERFLY VALVE
3. MANUAL BY-PASS VALVE
4. PRESSURE GAUGE W/ PRESSURE INDICATING TRANSMITTER
5. PRV STATION OUTLET PIT
6. FLANGE COUPLING ADAPTER
7. PRV STATION INLET PIT
8. AIR RELEASE VALVE
9. MANUAL BYPASS GATE VALVE
10. PIPE SUPPORT

FINAL

CITY OF SURPRISE
Maricopa County, Arizona
Water and Wastewater Guidelines

SURPRISE ARIZONA

PRESSURE REDUCING STATION (PRS) DETAILS

SCALE

FIGURE 12.1

REV. 0

REVISIONS	DWN	APVD	APVD	DATE

DESIGNED G.S.
DRAWN PAT
CHECKED
APPROVED
APPROVED
DATE APRIL 2011

CHAPTER 13 WATER STORAGE RESERVOIRS

13.01 General

A. This chapter delineates the standards and guidelines for design of steel and pre-stressed concrete reservoirs, where a reservoir is defined as a facility that provides operational, emergency, and fire protection storage, as well as regulation and control of potable or finished water.

B. The design criteria for steel and concrete reservoirs are governed by the guidelines of this chapter as well as the standards and codes presented in Chapter 1.

C. The civil design criteria described in Chapter 2 must be considered.

D. It is the responsibility of the Engineer to ensure that the design complies with ADEQ Engineering Design Guidelines for the Construction of Water Systems.

E. It is the Engineer's responsibility to make reference to and/or utilize industry standards not otherwise directly referenced within this document.

13.02 Site Considerations

A. General: Site selection requires direct coordination with COS to ensure the design meets the requirements of the water system master plan for the project as well as the COS Water Master Plan.

B. Final selection of the site will be reviewed and approved by the COS Public Works Director. The list below describes site selection criteria specific to reservoir design:

1. Site location with easements, site ownership, neighboring property ownership, APN information, and legal description.

2. Preliminary reservoir size(s) and quantity, and master planned for not less than two 1.2-MG reservoirs.

3. Proximity to existing and future water pump stations.

4. Distribution system hydraulic capacity requirements including overflow elevations.

5. Access to facility including staging plan and construction access.

6. Site drainage. The tank site should be located in an area that will not be impacted by washes and/or floodplains.

7. Future expansion with site suitable for buildout of at least two reservoirs of equal capacity.

8. Appearance complies with COS Unified Development code.

13.03 Concept Design Review (CDR) Phase

A. General: A CDR is the basis for the subsequent design process and must clearly present the basis of design. Final design cannot proceed without an approved CDR, which must include the following at a minimum:

1. Executive Summary.

2. Table of Contents.

3. Project Background.

4. Description of property ownership, right-of-way, and easement information (per Chapter 1).

5. Draft Traffic Study.

6. Draft Drainage Study.

7. Draft Geotechnical Investigation Report.

8. Draft Environmental Investigation Report.

9. Draft Corrosion Control/Cathodic Protection Report.

10. Topographic mapping information summary.

11. Description of Reservoir Sizing and Site Selection to include at a minimum:
    a) Project-specific cost comparison of steel versus pre-stressed concrete, which includes capital costs and operating and maintenance costs
    b) Summary of constructability issues
    c) Summary of maintenance issues
    d) Table that summarizes the reservoir sizing.

12. Description of security features in accordance with the current COS Security Master Plan.

13. Preliminary drawings that include the following at a minimum:
    a) Proposed service area
    b) Site access

c) Contractor staging area(s)
d) Proposed site plan and improvements
e) Preliminary grading plan
f) Slope stabilization options, as required by the geotechnical report
g) Any offsite improvements
h) Preliminary plans, sections, and details
i) Existing topography
j) Property ownership information
k) Rights-of-way/easements.

14. Description of connection(s) for future facilities.

15. Identify any permanent and temporary right-of-way or easement constraints and acquisitions.

16. Matrix summary of permits to be obtained and fees.

17. List of applicable agencies and utilities to review and sign the drawings.

18. Preliminary quantity and associated cost estimates.

19. Preliminary construction schedule.

20. Figures, tables, and other displays to support recommendations.

21. List of applicable reports, master plans, and maps reviewed and other relevant project information.

22. Preliminary work sequence for connecting to existing facilities (phasing, shutdowns, etc,).

23. Preliminary description of operations and controls to include communication with SCADA.

24. Draft design calculations.

13.04 Agency and Utility Coordination

A. The Engineer shall initiate contact and coordinate efforts with outside utilities and agencies in accordance with Chapter 1.

13.05 Final Design Phase

A. General: The Engineer shall provide a Final Design with progress submittals to the COS at 60 percent and 90 percent level of completion in accordance with Chapter 1, which builds upon work completed during the CDR. The Final Design shall include:

1. Final design drawings.
2. Final specifications.
3. Details of security features in accordance with the current COS Security Master Plan.
4. Final cost estimate.
5. Final drawings and specifications shall meet the general requirements presented in Chapter 1.
6. Final versions of all studies and reports submitted with the CDR.

B. Requirements of the final design include the following:

1. A minimum design service life of 50 years.
2. Provisions for future facilities required for anticipated growth in the service area.
3. The reservoir shall be architecturally compatible with the surrounding area.
4. Sufficient space for vehicle access for operation and maintenance.
5. Inlet, outlet, drain, and overflow piping with all necessary control and measurement features that may include but are not limited to the following:
   a) Altitude valves
   b) Isolation valves
   c) Flapper valves
   d) Roof vent
   e) Man way access
   f) Pipe couplings.
6. Disinfection provisions in accordance with Section 13.10, if required.
7. Electrical facilities in accordance with Chapter 7 for power to equipment, lighting, and receptacles.

8. Instrumentation and control facilities in accordance with Chapter 8, which includes communications, PLC, instruments, and SCADA system in accordance with COS standards and guidelines.

13.06 Volume Criteria

A. General: The reservoir volume shall be determined by the Engineer, if not provided by the approved Water Master Plan.

B. Minimum Reservoir Size: A minimum reservoir size of not less than 1.0 MG (useable volume) is required unless approved in writing by the COS Public Works Director or his designee.

C. Maximum Sidewall Height: Volume shall be determined based on a maximum sidewall height of 16 feet.

D. Volume Requirements: Per the most recent version of the City of Surprise Integrated Water Master Plan.

1. Operational Storage: Is the volume of the reservoir devoted to supplying the water to the system under normal operating conditions.

2. Emergency Storage: Shall be considered during the design process. The amount of emergency storage shall be based upon an assessment of risk and the desired degree of system dependability.

3. Fire Suppression Storage: Is the volume required to deliver the largest fire flow in accordance with the fire flow requirements set forth by the currently adopted edition of the International Fire Code and any COS amendments.

13.07 General Design Requirements

A. Yard Piping:

1. Pipe material shall be as delineated in Chapter 10 and approved by COS.

2. All mainline valves shall be the same diameter as the pipeline.

3. Yard piping shall include aboveground tank isolation valves.

4. Multiple tanks shall be piped such that each tank can operate independently, in parallel, or in series.

B. Inlet and Outlet Piping:

1. Inlet and outlet piping shall be configured to fill from the top and drain from the bottom to promote mixing as illustrated by Figure 13.1.

2. In-line valves shall be the same diameter as inlet/outlet piping.

3. Inlet and outlet piping shall be offset 180 degrees to maximize water circulation.

C. Roof Access:

1. General: The Engineer shall provide roof access for reservoirs per the requirements herein and designed to meet currently adopted codes and standards.

2. External Ladders: Constructed of hot-dipped galvanized steel or epoxy-coated steel. Ladders shall be routed from ground level with a ladder cover extending from 4 inches below the bottom rung to a height of 8 feet to prevent unauthorized access and be equipped with the following in accordance with OSHA requirements:
   a) Safety ladder cage with the bottom fully blocked whenever the ladder cover is in the closed position, similar to Figure 13.2.
   b) Rest platforms.
   c) Non-slip rungs.

3. Internal Ladders: Shall be constructed of stainless steel and be located at each access hatch.

4. All conduit shall be located behind the ladder for security.

D. Roof Hatches:

1. General: Provide access hatches on roof and coordinate with roof access facilities as required for inspection and maintenance.

2. Each hatch shall have a hold open device, hasp lock, intrusion alarm, and security bar in accordance with COS Security Master Plan.

3. Minimum roof hatch dimensions required are 31-inch by 31-inch opening per Figure 13.3.

4. Locate one roof hatch for personnel access near the tank inlet pipe.

5. Locate one roof hatch above the tank overflow pipe as well as one at the interior ladder with ladder post safety device, which is generally opposite from the overflow hatch.

6. Hatches shall have a minimum 4-inch curb and the cover shall have a downward overlap of at least 3 inches on concrete tanks.

7. For buried, concrete tanks where vehicle loads are anticipated, roof hatch shall be designed for H20 loading.

8. Design roof with positive drainage away from hatches.

E. Security and Safety:

1. At a minimum, an eight-foot tall masonry perimeter wall with lockable entrance that is compatible with the surrounding development and landscaping.

2. At a minimum, the exterior of the masonry perimeter wall shall be coated with anti-graffiti protection coating system.

3. Provide security features at the discretion of the COS in accordance with the current COS Security Master Plan.

4. All access, safety, and structural components shall be designed per current OSHA requirements for the safety of COS personnel. At a minimum, the following safety equipment is required:
   a) Ladder cages with locks to restrict access
   b) Rest platforms
   c) Handrails
   d) Guardrails
   e) Fall protection
   f) Any other appropriate devices to conform to applicable state and federal requirements for occupational safety.

F. Paving and Drainage:

1. An asphalt concrete (AC) or decomposed granite (DG) roadway with a thickness of at least 4 inches and a width of 10 feet shall be provided around the entire perimeter of each reservoir.

2. Roadway slopes shall not exceed 10 percent.

3. Adequate drainage away from all structures shall be provided.

G. Disinfection:

1. Reservoirs must be disinfected before being put into service for the first time and after being entered for cleaning, repair, maintenance, rehabilitation, or painting.

2. Disinfection shall be in accordance with AWWA C652.

13.08 Concrete Reservoir Design

A. General: The COS concrete tank standard is prestressed concrete tank with cast-in-place core wall, vertical post-tensioned tendons, and circumferential prestressed strands.

B. Prestressed concrete tank shall be in accordance with AWWA D110 and equipped with:

1. Reinforced concrete foundation.
2. Walls with internal and external ladders.
3. Roof with hatches and vents.
4. Seismic cables.
5. Safety cages and fall protection as required by OSHA.
6. Exterior protective coatings.
7. Overflow drains.
8. Circumferential prestressed strands shall be tensioned by elongation methods with continuous electronic monitoring and recording. Pre-stressing by die drawing is not acceptable.

C. Design Criteria:

1. Tanks with precast concrete wall panels with internal post-tensioned tendons, and tanks with precast concrete wall panels with circumferential wrapped pre-stressing are not acceptable for use.
2. The following currently adopted version of standards and codes shall govern and shall be used for the design of concrete tanks:
   a) Currently adopted International Building Code of the International Conference of Building Officials.
   b) Building Code Requirements for Minimum Design Loads in Building and Other Structures, ASCE 7.
   c) Wire and Strand-Wound Circular, Prestressed Concrete Water Tanks, ANSI/AWWA D110.
   d) Building Code Requirements for Reinforced Concrete ACI 318.
   e) National Sanitation Foundation Standard 61 - Drinking Water System Components.

D. Seismic Loads:

1. Seismic Loads shall be in accordance with the requirements of AWWA D110 as amended by the currently adopted IBC and latest edition of ASCE 7.

2. The COS Building Department shall be consulted for verification of the seismic zone designation.

3. Site-specific seismic design recommendations, as provided in the geotechnical report, shall be considered.

E. Foundation and Tank Floor:

1. Design in accordance with the Geotechnical Report.

2. A structural floor or slab-on-grade foundation is allowable.

3. The concrete floor shall be cast continuously, without construction joints, when possible. Curing of the floor shall be done with water only.

4. A slab-on-grade type floor shall be designed to transmit loads to the sub-base through the floor. Anchored flexible base is preferred.

5. At a minimum, a membrane liner on the sub-base and covered with an aggregate sub-base; a liner sloped away from the center of the tank; and perimeter drains shall be provided.

6. The Design Engineer shall be responsible for the design of the foundation and tank floor according to codes for live and dead loads and for operating requirements and loading conditions during construction. The allowable loads shall be listed on the contract documents.

F. Tank Roof:

1. The roof pitch shall not preclude operators from walking on the roof. Fall protection anchors shall be located where operators can attach to anchors before stepping on the above-grade roof. Roof drains shall be provided on the entire perimeter of the tank.

2. A concrete tank shall have a precast/cast-in-place roof, or a flat precast/cast-in-place, two-way reinforced concrete flat slab roof. The joint between the roof and wall, separated by an elastomeric bearing pad, is preferred on a concrete tank. Aluminum roofs will not be allowed.

3. For buried reservoirs, the roof shall be designed for H20 traffic load unless guard posts are provided to prevent vehicle access.

G. Inlet and Outlet Piping:

1. Reinforced concrete piers shall be designed to support the pipe and to protect against uplift of the pipe due to buoyancy.

2. The inlet should be controlled by a valve outside the tank that can be closed for maintenance or inspection.

3. The outlet pipe requires a manual isolation valve located outside the tank that can be closed for maintenance or inspection.

H. Drain:

1. A tank drain shall be provided on the tank. It shall have an isolation valve located outside of the tank and be piped to a discharge manhole or storm drain vault.

2. All reservoir drains must have an air gap.

I. Overflow:

1. The overflow shall be provided on the exterior of the tank. Overflow pipe shall be sized for the maximum possible fill rate with a minimum diameter not less than the inlet pipe diameter.

2. Piping shall enter through the floor of concrete tanks near the tank wall. The overflow system must be designed to discharge not less than 12 inches but at least twice the pipe diameter.

3. Overflow discharge shall be sloped for complete drainage and discharge over a drainage inlet, plunge pool, or splash plate without causing erosion.

4. Provide duckbill check valve with air gap at the discharge point of the overflow drain per Figure 13.4. It shall be piped to a manhole or drainage facility for manual flow monitoring.

5. Verification in writing shall be provided to confirm that overflows will not impact adjacent properties.

6. An energy dissipater may be required to control erosion at point of discharge of the overflow system.
   a) The overflow pipe shall be designed to discharge to an energy dissipater at a maximum flow rate to be determined by the Engineer
   b) The Engineer shall design the energy dissipater to ensure that water within the reservoir is protected from cross-contamination with surface water

J. Reservoir Access:

1. Tanks shall have a minimum of two hinged, leak-proof, spring-loaded, alarmed, aluminum, lockable hatches.

2. Each hatch shall have a hold open device, hasp lock, intrusion alarm, and security bar in accordance with the current COS Security Mater Plan.

3. Both hatches shall be a minimum 31 inches square (Figure 13.3). One hatch shall be a personnel access hatch and located near the tank inlet pipe.

4. One of the roof hatches shall be located above the overflow system and the other is to be located at the interior ladder with ladder post safety device (generally opposite from the overflow hatch).

5. Hatches shall have a minimum 4-inch curb and the cover shall have a downward overlap of at least 3 inches on concrete tanks.

6. If the concrete tank is buried, the hatch shall be designed for H20 loading and drainage away from the hatch shall be provided.

K. Roof Vent:

1. Roof vents shall be sized to prevent excess pressure or vacuum buildup during the maximum inflow or outflow of water.

2. A minimum of one vent near the center of the tank shall be supplied. Roof venting shall be provided with two stainless steel mesh screens to prohibit entry of insects, birds, or undesirable objects.

3. For security, a metal cage shall be installed over the roof vent.

L. Underdrain System:

1. The underdrain system shall protect against uplift that occurs when the tank is drained and to detect excessive leakage from the tank. An

underdrain system shall be provided for partially-buried and buried pre-stressed concrete tanks. At a minimum, the underdrain system shall consist of a perimeter ring drain system. Water collected from beneath the tank and around the perimeter is discharged to a drainage facility or overflow/drain manhole.

2. The size and configuration of drain rock, polyethylene or PVC sheeting, filter fabric, and PVC perforated piping shall be determined by the Geotechnical Engineer.

M. Sampling Station:

1. A minimum of two sampling stations shall be provided. The taps shall be a stainless steel locking ball valve and shall be placed in a weatherproof secured locking box.

13.09 Steel Tank Design

A. General: The COS steel tank standard is ground level, fixed roof, epoxy-coated welded steel tank.

1. Standpipes and bolted steel tanks are not acceptable to the COS.

B. Design Criteria:

1. The currently adopted version of standards and codes shall govern and shall be used for the design of steel tanks.
   a) Currently adopted International Building Code of the International Conference of Building Officials
   b) Building Code Requirements for Minimum Design Loads in Building and Other Structures, ASCE 7
   c) Standards for Welded Steel Tanks for Water Storage, ANSI/AWWA D100
   d) Building Code Requirements for Reinforced Concrete ACI 318
   e) AWWA Standard for Painting Steel Water Storage Tanks, ANSI/AWWA D102
   f) National Sanitation Foundation Standard 61 - Drinking Water System Components.

C. Seismic Loads:

1. Seismic Loads shall be in accordance with the requirements of AWWA D110 as amended by the currently adopted IBC and latest edition of ASCE 7.

2. The COS Building Department shall be consulted for verification of the latest seismic zone designation.

D. Wind Loads:

1. Load (pressure) asserted on the tank shall be as recommended by ANSI/AWWA D100 on the basis of a basic wind speed of 100 mph or the requirements of the local code, whichever is more stringent.

E. Roof Design:

1. The tank roof shall be a structural-steel-supported, steel roof having a 3/4-inch vertical to a 12-inch horizontal slope. A knuckle with a 2-foot to 4-foot radius shall be provided at the roof and wall junction.

2. The roof plate that is not in contact with water shall be at least 3/16-inch thick; the roof plate submerged in water during normal operations shall be 1/4-inch minimum.

3. Corrosion allowance is not required for the roof plate.

4. The roof plate construction shall be in accordance with the standard practice of ANSI/AWWA D100, by continuous fillet weld at the topside only.

5. Full penetration welds shall be used to join the roof knuckle together.

6. The roof plate shall not be seal welded at the support members.

7. The roof supports shall be hot-rolled structural shapes with a minimum thickness of 3/16 inch.

8. Shape, bar, and plate submerged in water shall be 1/4-inch minimum.

9. Lateral bracing of the roof rafter compression flanges shall be required. Friction between rafters and roof plates may be considered unless otherwise restricted by ANSI/AWWA D100.

10. A typical roof guardrail is presented in Figures 13.2B and 13.2C.

11. Bolts inside the reservoir shall be Type ASTM A 325.

12. Columns shall be fabricated from steel pipe that is seal welded at both ends. Column base shall be fabricated from steel plate and designed for a maximum allowable soil bearing as recommended by a Geotechnical Engineer. The column base shall not be welded to

the bottom plate to allow for rotation during seismic events, but must be restrained from any lateral movement. The base assembly shall be fully coated prior to erection per ANSI/AWWA D100.

F. Wall Design:

1. The tank wall design shall be in accordance with ANSI/AWWA D100 standard.

2. The design fabrication and inspection requirements specified in ANSI/AWWA D100 will be allowed.

3. The lowest 1-day mean ambient temperature at the tank site shall be generally at 20 degrees Fahrenheit unless a lower ambient temperature is required by the COS.

4. Corrosion allowance is not required. Minimum tank wall thickness shall be in accordance with the requirements of ANSI/AWWA D100.

5. The tank wall shall be designed for stability without the requirements of intermediate girders on the inside or outside surface of the wall.

G. Tank Bottom:

1. The bottom shall be lap welded continuously from the top of the plate with a minimum thickness of 5/16 inch.

2. The bottom plate shall be extended a minimum of 1-1/2 inches beyond the exterior of the tank.

3. The joint between the tank wall and the bottom plate shall be continuously welded from inside and outside of the tank wall.

4. Corrosion allowance is not required.

5. The width and thickness of the bottom annular ring shall conform to the requirements of ANSI/AWWA D100.

6. The requirements of the butt-welded bottom annular ring shall be in accordance with the requirements of ANSI/AWWA D100.

H. Footings and Foundations:

1. Design in accordance with the Geotechnical Report.

2. Reinforced concrete ring footings shall be provided.

3. The top on the ring footing shall be approximately 6 inches above the finished surface.

4. The minimum embedment of the ring footing shall be as recommended by the geotechnical Engineer, but shall not be less than 2 feet, 6 inches.

5. Ring footings shall be reinforced to resist the lateral soil pressure on the confined earth.

6. The width and height of the ring footing shall be sized for the loads presented in Chapter 3 and the allowable soil bearing pressure recommended in the geotechnical report.

7. The minimum width shall not be less than 1 foot, 6 inches.

8. A compressive strength of at least 4,000 psi as determined by the Engineer shall be used for the concrete; 60,000 psi yield strength shall be required for reinforcing steel.

9. Concrete cover for rebar shall be in accordance with the requirements of ACI 318.

10. The Alternate Design method is recommended for the design reinforcement. Corrosion protection for concrete shall be as recommended by the Geotechnical Engineer.

I. Allowable Stress:

1. Allowable stress for steel plate and structural steel shall be in accordance with the requirements of ANSI/AWWA D100.

2. Allowable stresses for tank concrete footing shall be in accordance with the requirements of ACI 318.

J. Inlet and Outlet Piping:

1. The outlet pipe shall penetrate the bottom plate or lower wall plate (minimum of 12 inches from floor) and shall be separated as much as is practical for circulation. In-line valves shall be the same diameter as inlet/outlet piping.

2. Pipe penetration openings through the bottom plate shall be reinforced in accordance with the requirements of ANSI/AWWA D100.

K. Overflow:

1. The overflow shall be provided on the exterior of the tank. Overflow pipe shall be sized for the maximum possible fill rate with a minimum diameter not less than the inlet pipe diameter.

2. To ensure a proper air gap, the overflow system must be designed to dispense not less than twice the pipe diameter above the surface of the ground, be sloped for complete drainage, and discharges over a drainage inlet, plunge pool, or splash plate without causing erosion.

3. Provide duckbill check valve with air gap at the discharge point of the overflow discharge (Figure 13.4). It shall be piped to a manhole or drainage facility for manual flow monitoring The Engineer shall design the overflow system to ensure that water within the reservoir is protected from cross contamination with surface water, insects, and animal intrusion, etc.

4. Verification in writing shall be provided to confirm that overflows will not adversely impact adjacent properties.

L. Drain:

1. An appropriately sized drain pipe shall be installed at the bottom of the tank with a size of not less than 8 inches.

2. If the tank is unanchored, the location of the penetration in the bottom plate shall conform to the requirements of Chapter 13 of the ANSI/AWWA D100.

3. The drain line may be discharged to a drainage structure or facility common with the overflow pipe.

4. All reservoir drains must have an air gap.

M. Roof Vent:

1. Roof vents shall be sized to prevent excess pressure or vacuum buildup during the maximum inflow or outflow of water.

2. A minimum of one vent near the center of the tank shall be supplied. Roof venting shall be provided with two stainless steel mesh screens to prohibit entry of insects, birds, or undesirable objects.

3. Four eye bolts shall also be supplied for tie-offs.

N. Reservoir Manways:

1. Tanks shall have a minimum 33-inch diameter, hinged, inward opening manways at the bottom of the shell, per Figure 13.5.

2. Design of manways and reinforcement shall confirm to the requirements of ANSI/AWWA D100.

O. Corrosion Control:

1. Corrosion control measures shall be provided in accordance with Chapter 5.

2. Provide protective coatings for welded steel reservoirs and all interior surfaces including, but not limited to shell, roof framing, roof plates, columns, floor, piping, manways, and ladders; and painting of all exterior surfaces including, but not limited to shell, roof, manways, ladders (including cage and door), hatches, vents, and exposed piping is required.

3. All interior coatings shall meet requirements of NSF 61 for drinking water service.

4. All parts of steel shall be painted in accordance with the requirements of ANSI/AWWA D102.

5. Corrosion Control: Corrosion control measures such as cathodic protection shall meet the requirements of Chapter 5.

6. The warranty from defects in material and workmanship shall extend for a period of one year from the date of acceptance of the work. This first anniversary inspection requirement shall conform to ANSI/AWWA D102.

7. Application procedures, safety precautions, and testing of coatings shall be in accordance with the requirements of ANSI/AWWA D102.

8. A NACE certified coating inspector will be required to monitor the entire coating process from surface preparation to finished coating and perform integrity tests on the coatings to confirm proper application.

9. Interior Coating Systems:
   a) Epoxy or polyurethane coating system is required for all interior surfaces including the tank wall, roof plate, bottom plate, and roof support member.

b) The epoxy shall be a self-priming epoxy coating intended for potable water contact. The epoxy formulation shall use 100 percent solids and zero VOC.
c) The polyurethane coating shall be self-priming; plural-component lining that uses 100 percent solids and zero VOC.
d) All welds, rafter edges, top of truss beams, etc. shall be stripe-coated by hand.
e) Surface preparation shall be near white blast cleaning that conforms to SSPC-SP10. The surface profile shall be 2.5 – 3.5 mils.

10. Exterior Coating Systems:
    a) For exposed exterior metal surfaces of the tank, a coating system composed of epoxy, intermediate epoxy, and polyurethane will be applied
    b) The epoxy is a polyamide or polyamine, anti-corrosive converted epoxy primer containing rust inhibitive pigments
    c) The intermediate epoxy is a two-component epoxy capable of 4 to 6 MDFT per coat
    d) The aliphatic polyurethane shall be a two-component acrylic-based polyurethane, semi-gloss finish. This paint shall only be used in areas where reflection is not a problem

P. Sampling Station:

1. A minimum of two sampling stations shall be provided. The taps shall include a stainless steel locking ball valve.

13.10 Water Quality Provisions

A. The Engineer shall provide chlorination provisions for reservoirs in accordance with Chapter 6, which may include the following:

1. Onsite sodium hypochlorite generation or bulk sodium hypochlorite system.

2. Sodium hypochlorite storage tanks with secondary containment with drain sump.

3. Sodium hypochlorite metering pumps.

4. Sampling ports.

5. Piping, analyzers, and accessories.

B. Provide chlorine injection locations at inlet and outlet of reservoir to allow for feed forward and trim back chemical dosage control.

C. Mixing: The Engineer shall evaluate volume turnover and potential for stratification, which may dictate the need for reservoir mixing.

13.11 Electrical Systems

A. Electrical power and lighting systems shall be designed in accordance with the requirements of Chapter 7.

B. Site Lighting: Three levels of site lighting shall be provided as follows to maintain security in accordance with the current COS Security Mater Plan:

1. Dusk to dawn lighting.

2. Motion detection for security.

3. Switched lighting for maintenance purposes.

C. The electrical system providing power to components of the reservoir shall be designed by a qualified electrical engineer registered in the State of Arizona.

D. Raceways shall be installed using rigid steel conduit, flexible liquid tight conduit, plastic-coated rigid steel conduit, and/or plastic conduit.

E. Exposed raceways shall be rigid steel conduit, flexible liquid tight conduit in non-corrosive areas; exposed raceways shall be plastic-coated rigid steel conduit, flexible liquid tight conduit in corrosive areas; underground conduits shall be plastic conduit with plastic-coated steel conduits for all bend greater than 45 degrees and all risers and shall be encased in a concrete reinforced duct bank.

1. Boxes available for use are pull boxes, junction boxes, outlet boxes, and terminal boxes and shall be of the same type material as that of the conduit system.

2. The wire and cable used shall be 600-volt and single conductor, type XHHW 2. Nameplates shall be provided on each electrical panel, motor starter, and control device.

3. Underground, non-metallic, utility marking tape shall also be provided.

4. All conduit on aboveground tank exterior wall shall be located behind the tank roof access ladder or stairway for security.

5. Pull boxes shall be identified with COS marking.

13.12 Instrumentation and Control

A. All instrumentation and control shall be provided per the requirements of Chapter 8.

B. Level Indication and Monitoring:

1. External Level Gauge: Provide an external level gauge that utilizes a float and counterweight with switches associated with HIGH LEVEL alarm and LOW LEVEL alarm.

2. The reservoir level shall be measured, locally indicated, and transmitted to a Level Monitoring Cabinet and Programmable Logic Controller (PLC).

3. Level measurement shall utilize a 3-inch, flange-mounted differential pressure transducer equipped with FAILED ALARM.

4. Provide backup level switches not associated with level gauge float for HIGH-HIGH alarm and LOW-LOW alarm.

5. Pump suction from reservoir: The low-level switch activated from the level transmitter signal will be used to protect the pumps from cavitation.

6. Pump discharge to reservoir: The high-level and low-level switch alarms activated from the level transmitter signal shall be transmitted to the pumping station or well site and used to in the starting, stopping, and control of pumps as well as to protect the reservoir from overflow.

7. The Engineer shall also include elevations needed for all alarm conditions that will be programmed into the system during startup.

8. In the event some of the alarm conditions are to be provided by suppliers of the equipment, those shall be clearly defined in the contract documents and defined as the responsibility of the Contractor.

9. Locate level transmitters and junction boxes in an accessible location for maintenance.

C. Reservoir Alarms:

1. HIGH LEVEL alarm indication associated with level gauge float

2. LOW LEVEL alarm indication associated with level gauge float

3. HIGH-HIGH alarm indication

4. Level measurement device FAILED alarm indication

5. LOW-LOW alarm indication.

D. Reliability:

1. In order to enhance reliability of the instrumentation and control system, the use of redundant instruments and power supplies is encouraged.

2. PLCs and critical instruments must be powered with uninterruptible power supplies, preferably by DC battery supply sized to enable 12 hours of use.

E. Intrusion Alarm Switches:

1. Provide intrusion switches for doors and hatches with alarms and in accordance with the current COS Security Master Plan.

2. Alarm switches shall be annunciated to SCADA.

F. Provide a single integrator or subconsultant to be responsible for all PLC programming, and SCADA per Chapter 8 requirements.

13.13 Landscaping

A. Landscaping shall be site specific and conform to local landscaping schemes. The landscape must be perceived as an extension of the directions established for the tank aesthetics. As such, the Engineer shall be responsible for guiding and coordinating the landscape design for the Project, either by retaining the services of a subconsultant, or engaging a landscape professional on his own staff.

B. Block walls shall conform to Surprise Unified Development Code.

NOTES:

1. PAINTED TO MATCH TANK

FINAL

REVISIONS	DWN	APVD	APVD	DATE

CITY OF SURPRISE

Maricopa County, Arizona

Water and Wastewater Guidelines

DESIGNED –
DRAWN ARE
CHECKED
APPROVED
APPROVED
DATE APRIL 2011

SURPRISE ARIZONA

WATER STORAGE TANK INLET PIPE

SCALE NO SCALE

FIGURE	REV.
13.1	0

NOTES:

1. PAINTED TO MATCH TANK

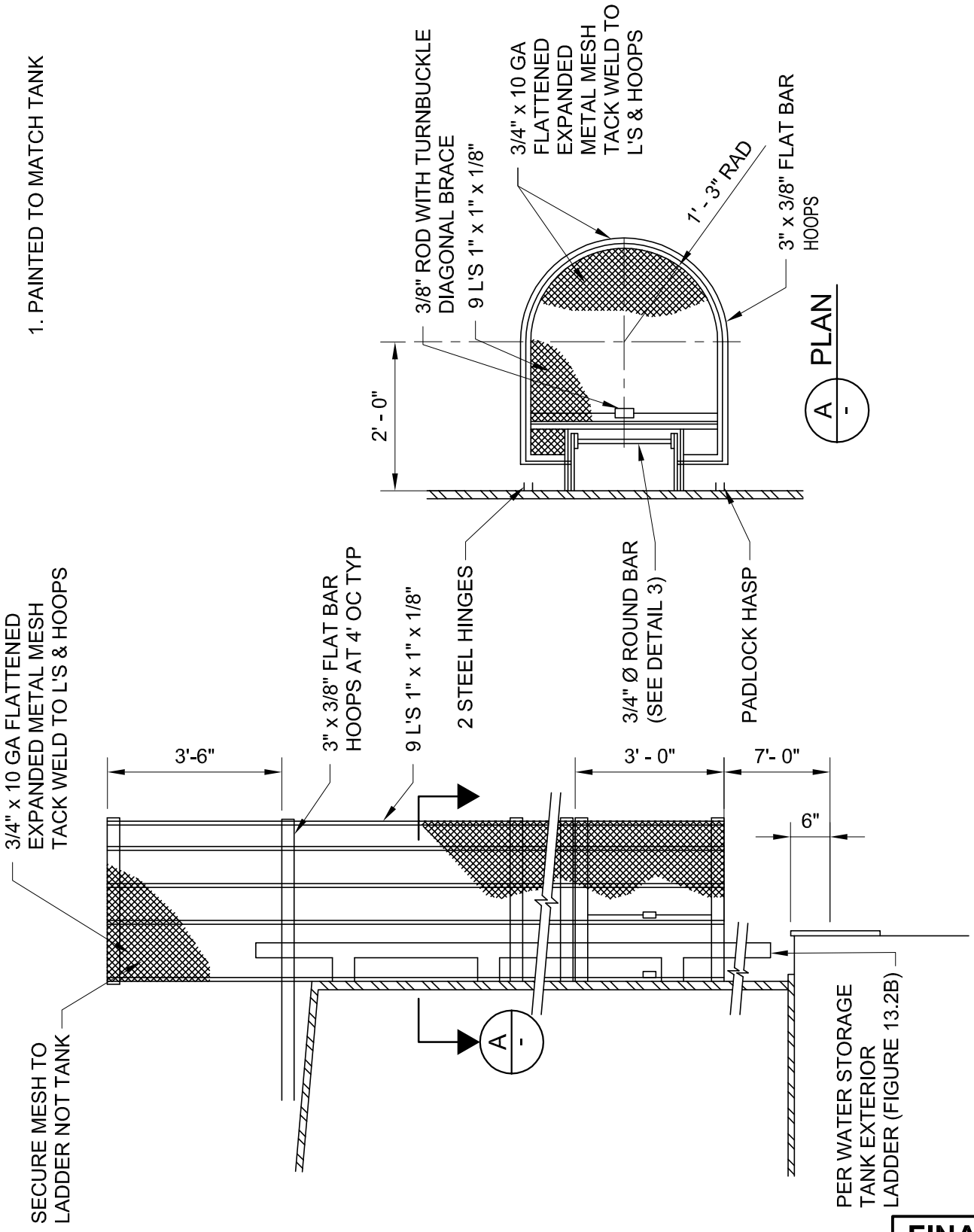

FINAL

REVISIONS	DWN	APVD	APVD	DATE

CITY OF SURPRISE

Maricopa County, Arizona

Water and Wastewater Guidelines

DESIGNED –
DRAWN ARE
CHECKED
APPROVED
APPROVED
DATE APRIL 2011

SURPRISE ARIZONA

WATER STORAGE TANK EXTERIOR CAGE DETAIL

SCALE NO SCALE

FIGURE	REV.
13.2A	0

NOTES:

1. PAINTED TO MATCH TANK

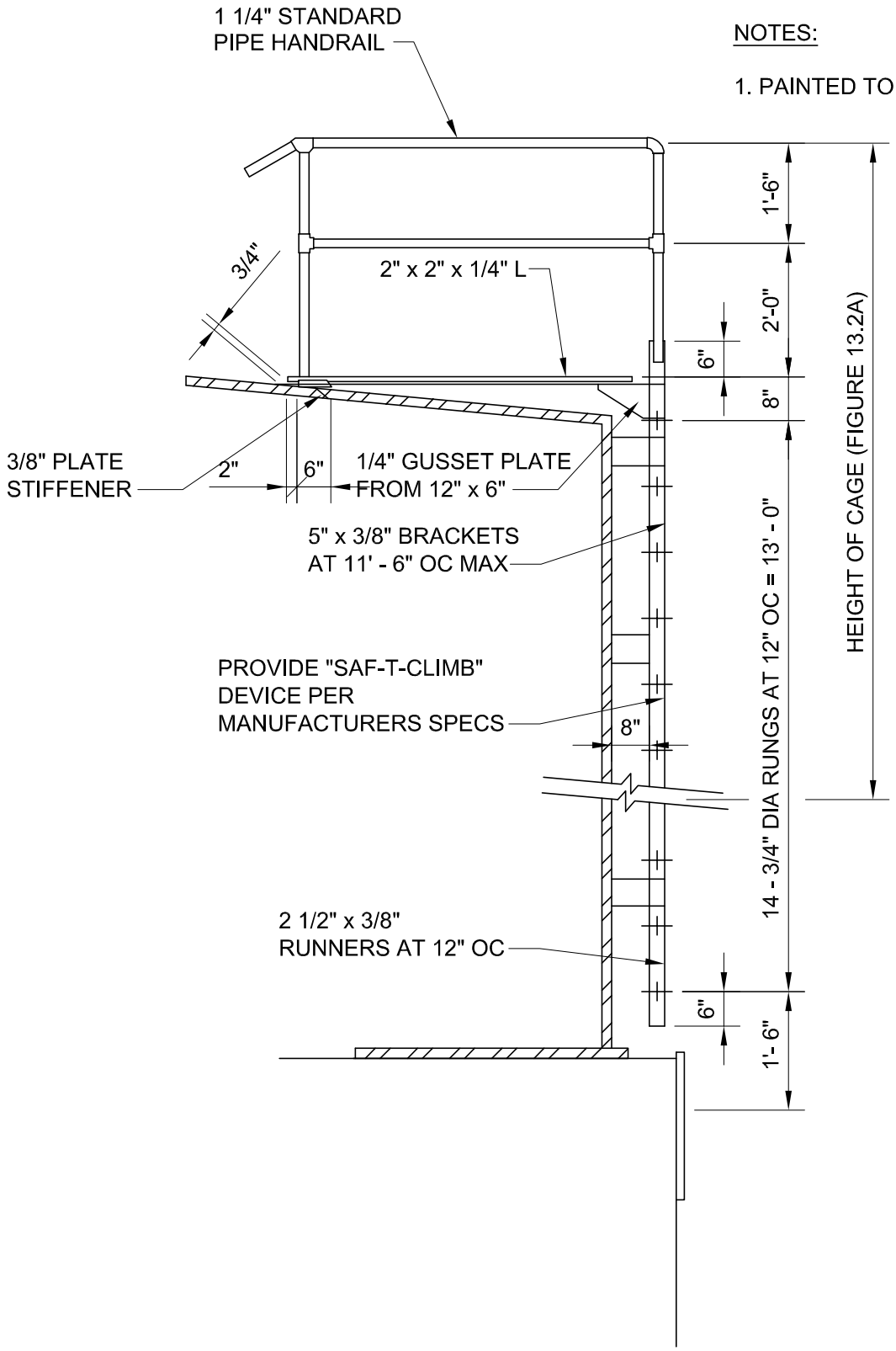

FINAL

REVISIONS	DWN	APVD	APVD	DATE

CITY OF SURPRISE

Maricopa County, Arizona

Water and Wastewater Guidelines

DESIGNED –
DRAWN ARE
CHECKED
APPROVED
APPROVED
DATE APRIL 2011

SURPRISE
ARIZONA

WATER STORAGE TANK
EXTERIOR LADDER DETAIL

SCALE NO SCALE

FIGURE	REV.
13.2B	0

NOTES:

1. PAINTED TO MATCH TANK

FINAL

REVISIONS	DWN	APVD	APVD	DATE

CITY OF SURPRISE

Maricopa County, Arizona

Water and Wastewater Guidelines

DESIGNED –
DRAWN ARE
CHECKED
APPROVED
APPROVED
DATE APRIL 2011

SURPRISE
ARIZONA

WATER STORAGE TANK
TOP PLATFORM
DETAIL

SCALE NO SCALE

FIGURE	REV.
13.2C	0

NOTES:

1. PAINTED TO MATCH TANK

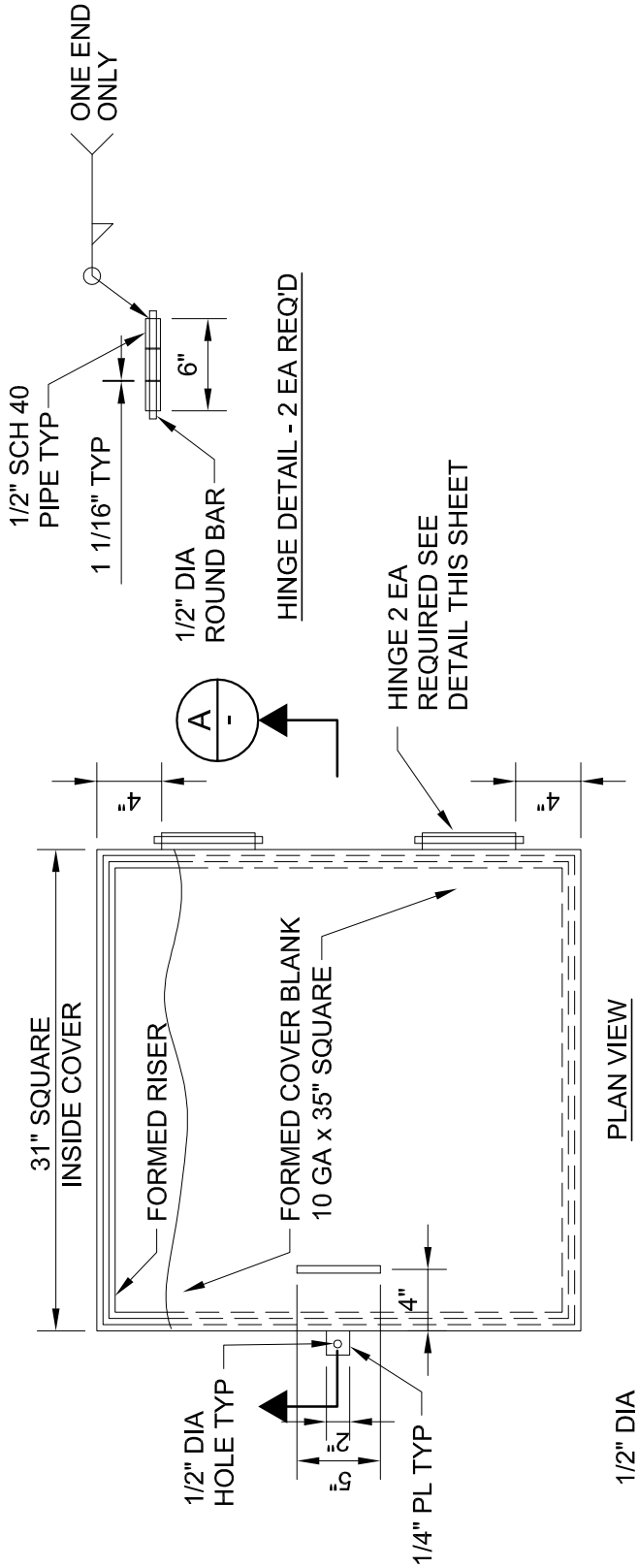

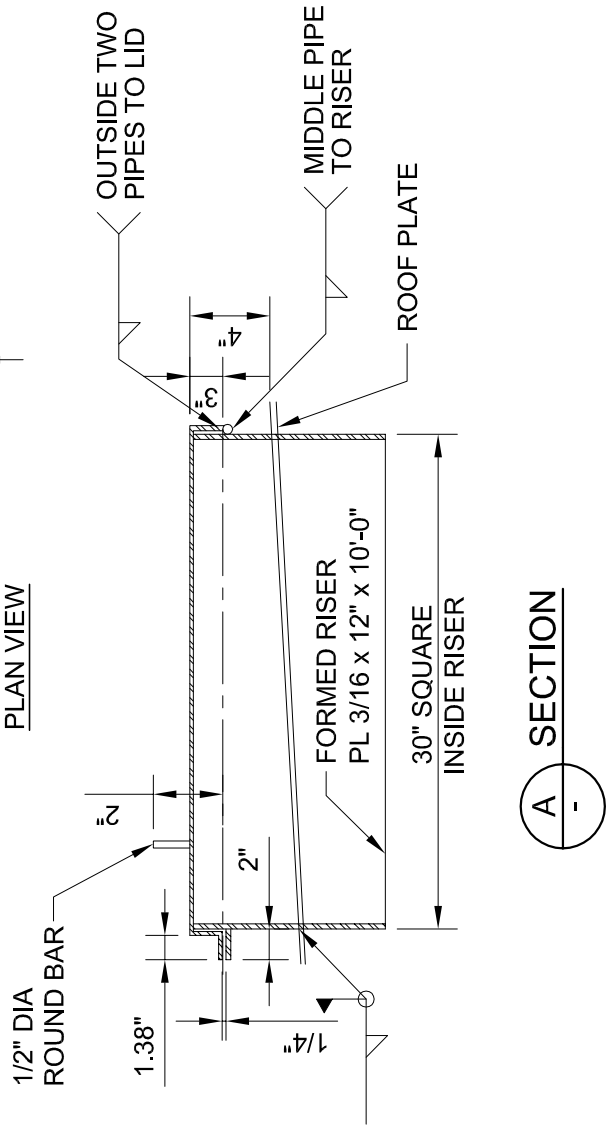

FINAL

REVISIONS	DWN	APVD	APVD	DATE

CITY OF SURPRISE

Maricopa County, Arizona

Water and Wastewater Guidelines

DESIGNED –
DRAWN ARE
CHECKED
APPROVED
APPROVED
DATE APRIL 2011

SURPRISE ARIZONA

WATER STORAGE TANK ROOF MANHOLE

SCALE

FIGURE	REV.
13.3	0

NOTES:

1. PAINTED TO MATCH TANK

FINAL

REVISIONS	DWN	APVD	APVD	DATE

CITY OF SURPRISE

Maricopa County, Arizona

Water and Wastewater Guidelines

DESIGNED –
DRAWN ARE
CHECKED
APPROVED
APPROVED
DATE APRIL 2011

SURPRISE ARIZONA

WATER STORAGE TANK OVERFLOW PIPE DETAIL

SCALE NO SCALE

FIGURE	REV.
13.4	0

FRONT VIEW

SECTION THRU VERT AXIS

SHELL MANWAY PLATE SUMMARY			
DESCRIPTION	SYMBOL	THICKNESS	PLATE TYPE
COVER PLATE	Tc	3/8"	ASTM A36
FLANGE PLATE	Tf	3/8"	ASTM A36
NECK PLATE	Tn	1/4"	ASTM A36
REINFORCEMENT PLATE	Tr	5/16"	ASTM A36

FINAL

REVISIONS	DWN	APVD	APVD	DATE

CITY OF SURPRISE

Maricopa County, Arizona

Water and Wastewater Guidelines

DESIGNED –
DRAWN ARE
CHECKED
APPROVED
APPROVED
DATE APRIL 2011

SURPRISE ARIZONA

WATER STORAGE TANK
SHELL MANWAY

SCALE NO SCALE

FIGURE 13.5

REV. 0

CHAPTER 14 WATER PRODUCTION WELLS

14.01 General

A. Purpose: The purpose of this chapter is to set forth guidelines and standards for the design, drilling, and equipping of water production wells in the Surprise water system. The following should be considered minimum standards for the development of a water production well and site, and should not be considered an all-inclusive list of requirements.

B. Groundwater Management: The City of Surprise lies within the Arizona Department of Water Resources (ADWR) Phoenix Active Management Area (AMA), and is therefore subject to the special requirements that apply to the AMA.

C. Special Permitting Requirements: The process of designing, drilling, and equipping a potable water production well involves applying for and securing a number of permits that are unique to drilling and equipping wells, and may include but not be limited to the following:

1. Application for Permit to Withdraw Groundwater for Hydrologic Testing Purposes within an AMA (ADWR): This type of permit is sometimes used to drill the pilot hole for the well for characterization of aquifer physical parameters and to perform initial testing for water quantity and quality. If a well is completed at this location, a permit to drill a Service Area Well must be filed to replace the Hydrologic Testing Permit before drilling of the well is completed.

2. Notice of Intention to Replace an Existing Non-Exempt Well (ADWR): This permit allows the permanent replacement of an existing well with a new well of the same or lesser capacity.

3. Application for a Permit to Drill or Operate a Service Area Well Within an AMA (ADWR): This type of permit is for a new well when there is no existing well to be replaced. This type of permit must be accompanied by a Well Impact Analysis to show the extent of disruption to existing area wells. If existing wells are found to be adversely affected, the owners of each affected well must sign a Well Impact Waiver before the new well permit is approved.

4. All water production wells, regardless of type, shall also be permitted as recovery wells.

5. New Groundwater Source Approval (MCESD): This document approves the use of the new well as a drinking water source, with or

without stipulations. It must be issued before the well can be used as a drinking water source.

6. The Engineer shall prepare and submit MCESD Applications for Approval to Construct and Approval of Construction at the appropriate times for the well equipping portion of the project.

7. NPDES/AZPDES and APP Permits: Depending on the circumstances for each individual well, temporary discharge permits and APP permits may be required if water discharges during development and testing of the well are expected to flow into waterways or affect groundwater in the area. Permanent permits may also have to be filed if the proposed method of disposing of well water that is pumped to waste discharges into a waterway or affects groundwater.

8. It is the Engineer's responsibility to determine the permits required for the well, and to prepare the documentation and permit forms necessary to complete the well drilling and equipping approval process. The well must be permitted for its full volume and all waivers must be obtained for the well to be accepted by the City.

D. Well Design Standards and Criteria: Water production wells shall satisfy the following minimum standards and criteria and meet the specified values outlined in the latest version of the City of Surprise Integrated Water Master Plan.:

1. Well capacity: The total required well capacity for a development shall be as specified in the latest version of the City of Surprise Integrated Water Master Plan. A typical production well detail is shown on Figure 14.1.

2. Well Discharge Rate: The maximum discharge rate for a water production well shall be 1,500 gallons per minute per well.

3. Specific Capacity: The specific capacity of a well shall be equal to or greater than 10 gallons per minute per foot of drawdown.

4. Efficiency: The maximum discharge rate of a well shall be based on a well efficiency of 85 percent.

5. Unless specifically noted otherwise herein, water production well design and construction shall conform to the following standards, in order of priority:
   a) ADWR well drilling requirements for wells drilled in an Active Management Area

b) ADWR Well Abandonment Handbook
c) COS Production Well Technical Specifications and Production Well Sampling Plan
d) All materials in contact with well water shall be certified to NSF Standard 61
e) ANSI/AWWA Standard A100 - Water Wells
f) AWWA Manual of Water Supply Practices M21 - Groundwater.

E. Site Selection and Layout: Site selection requires direct coordination with and approval of the Public Works Director to ensure the design meets the City's requirements of site location and layout. Typical site layout and wellhead detail are shown on Figures 14.2 and 14.3, respectively. The Site Civil Design described in Chapter 2 must be evaluated, along with the following:

1. Proximity to existing and future water reservoirs and pump stations.

2. Minimum size of well site is 150 feet by 150 feet, and shall be level and free from all riverbeds, stream beds, washes (including Section 404 washes), and other features that would diminish the use of the site.

3. Provision for other facilities on site (standby generator, electrical service, well head treatment, disinfection).

4. Distribution system hydraulic capacity requirements.

5. Access to facility, including staging plan and construction access.

6. Site drainage and pump-to-waste provisions.

7. Future expansion provisions, including two replacement well locations.

8. Adherence to Surprise Uniform Development Code.

14.02 General Design and Construction Procedure for Water Production Wells

A. General: Design, construction inspection, and performance testing of the water production well shall be performed directly by or under the direct supervision of a Professional Geologist who is registered in the State of Arizona, and who specializes in the design and drilling of water production wells. Construction of the well shall be performed by an Arizona licensed contractor who is also certified as a well driller by ADWR.

B. Procedure: Drilling and completing a water production well shall be accomplished in accordance with the COS Production Well Technical Specifications (see Appendix A), the COS Hydrogeologic Scope of Work and associated water quality and sampling requirements (see Appendix B) as well as the specific additional requirements of the Engineer/Consultant and the COS.

C. Well Completion Report: Using the data provided by the Contractor and others during the well drilling and completion process, the Engineer/Consultant will prepare a Well Completion Report that will serve as a compilation of all work and testing performed in the construction of the well. The report format shall generally follow the example index that is included in Appendix C.

Five copies of the Draft Well Completion Report plus one electronic copy in .pdf format shall be submitted for review. After receipt of COS comments, the report shall be finalized. Ten copies of the Final Well Completion Report plus five electronic copies in .pdf format shall be submitted.

D. Well Abandonment: The abandonment of existing wells shall be accomplished in accordance with the ADWR Well Abandonment Handbook, current edition. The Engineer shall prepare a Well Abandonment Plan for the COS review and approval that specifically addresses the site specific hydrogeologic conditions that could promote aquifer cross connections and contaminate or impair future use of potable aquifer sources. At a minimum, the COS also requires the Engineer to review and utilize the following information to develop the Well Abandonment Plan:

1. .Available well construction documents.
2. Available and/or nearby well lithologic logs.
3. Available geophysical logging data, depth sampling, and aquifer water quality data.
4. Water level and drawdown data from pumping tests.
5. Hydrogeologic data, depth sampling data, water levels, and water quality data from the replacement well drilling.

14.03 Concept Design Review (CDR) Phase

A. General: The CDR phase of the project shall be summarized and presented in a Concept Design Review (CDR). The CDR is the basis for the ensuing design process and must be presented in a fashion that allows the reader to gain a thorough and complete understanding of the scope of the project. Without an approved CDR, the Engineer will not receive City approval to proceed to the final design.

1. Noise level restrictions vary with the site location, ambient noise levels, land use in the area, and neighborhood sensitivity to elevated noise levels. The Engineer shall determine the appropriate noise level restrictions that apply to the site, based on MCESD APP restrictions and the requirements of the Surprise Unified Development Code. Restrict noise to 65 decibels unless more stringent requirements apply. The need for an acoustic enclosure on the well head will be determined by these restrictions.

B. Report: Prepare a CDR with the items below and all design calculations supporting decisions and/or recommendations. The report will be submitted to the City for review and acceptance. Submit the items below and other applicable items to support the CDR to the City for review and approval:

1. Executive Summary.
2. Table of Contents.
3. Project Background.
4. Existing conditions, including the completed well details.
5. Summary of utility conflict information, including pothole information or recommendations for utilities proposed to be potholed.
6. Topographic mapping information summary, per Chapter 2.
7. Draft Geotechnical Investigation Report, per Chapter 3.
8. Draft Environmental Investigation Report, per Chapter 1.
9. Draft Corrosion Control/Cathodic Protection Report, per Chapter 5.
10. Preliminary Drainage Report in accordance with requirements of Chapter 2.
11. Summary/overview of the applicable drainage and traffic study findings with references to those documents submitted separately.

12. Description of security features in accordance with the latest COS Security Master Plan.

13. Preliminary plans and centerline profiles (30 percent design drawings) illustrating at a minimum:
    a) Proposed site plan and improvements
    b) Preliminary grading plan
    c) Slope stabilization options, as required by the geotechnical report
    d) The recommended points of connection to existing and future facilities
    e) Any offsite improvements
    f) Appropriate sections, elevations, or details
    g) Existing topography
    h) Property ownership information
    i) Rights-of-way/easements
    j) P&IDs.

14. Site access, temporary and permanent, to include staging plan, as necessary.

15. Alternatives evaluation summary, if required.

16. Identification of appurtenant facilities and spacing criteria.

17. Opinions and recommendations for bidding packages, scheduling, contractor staffing, and impacts to public areas.

18. Identification of any permanent and temporary ROW/easement constraints and acquisitions.

19. Matrix summary of permits to be obtained and fees.

20. List of agencies and utilities to review and sign the drawings.

21. Outline of technical specification sections and list of final design drawings.

22. Preliminary quantity and associated cost estimates.

23. Preliminary construction schedule.

24. Project correspondence file, including meeting minutes.

25. Inventory of existing facilities and improvements.

26. Graphics, detail sketches, tables, and other displays to support analyses and recommendations.

27. List of relevant reports, plans, and maps reviewed and other relevant project information.

28. Work plan for how construction is to be accomplished if connecting into existing facilities (phasing, shutdowns, etc,).

29. Preliminary description of operations and controls to include communication with SCADA.

30. Design calculations.

31. Major equipment selection based on COS Preferred Equipment List.

14.04 Agency and Utility Coordination

A. The Engineer shall initiate contact and coordinate efforts with outside utilities and agencies in accordance with Chapter 1.

14.05 Final Design Phase

A. General Submittal Requirements: The Engineer may proceed with the final design of the project upon acceptance of the CDR, which will be considered the 30 percent Design Submittal. After review and approval of the preliminary documents, the Engineer shall produce final construction plans and specifications. Progress submittals are required to the COS at 60 percent and 90 percent level of completion in accordance with Chapter 1.

B. The design shall provide for the complete construction of a water production well facility including a well pump and motor; an acoustic enclosure (if necessary); a building (if necessary); associated site improvements; associated piping, well pump control valves, and appurtenances; manholes and/or storm drainage; electrical power; instrumentation and controls; interface to the City's SCADA system; and other associated work identified by the City as necessary to make the facility fully functional.

C. The final design of the water production well shall include:

1. A minimum design service life of 50 years. The facility shall also be capable of accommodating future components anticipated for projected growth in the service area.

2. The facility shall be architecturally compatible with the surrounding area.

3. Ease of access for operation and maintenance.

4. Site development for current and future expansion including adequate right-of-way for vehicular access and parking, supply pipeline and drain, security fencing, access gate(s), security lighting, drainage, site signage, and low maintenance landscaping which eliminates or minimizes the need for automated irrigation.

5. Well pump discharge and pump-to-waste piping with all necessary control valves and flow measurement features; and other appurtenances required for a complete and operable system. This includes the splash box on the pump-to-waste line as detailed on Figure 14.4, and piping connections to the site retention basin/dry well.

6. Water quality and sampling provisions as required.

7. Plumbing systems for potable water, non-potable water, sewer, and drainage.

8. Details of security features in accordance with the current COS Security Master Plan.

9. Electrical systems for grounding, lighting, power, and standby power generation in accordance with Chapter 7.

10. Instrumentation, control, SCADA in accordance with Chapter 8.

11. Provision for separate fenced area for APS electrical power service facilities.

12. A design that allows remote monitoring and remote manual control of the well through a connection with the City's SCADA system. The well shall have a SCADA system in accordance with City standards. A well pump PLC may be required in accordance with City standards.

D. Well Pump Design Criteria:

1. Shall be based on the results of the aquifer testing that was performed during the completion of the water production well, and confirmed by the Engineer to be in accordance with the approved Water Master Plan and the calculated demands of the proposed development.

E. Hydraulic Calculations:

1. The Engineer shall prepare calculations for supporting the sizing of the piping and control valves on the well discharge and pump-to-waste piping.
   a) The well pump discharge shall deliver water to the location designated in the CDR. There are two possible discharge modes:
      1) Pump to groundwater treatment facility.
      2) Pump to water storage facility.

   b) The pump-to-waste piping shall deliver water to the on-site retention basin.

F. Yard Piping:

1. Ductile Iron Pipe (DIP) shall be used for yard piping and shall be furnished and installed in accordance with Chapter 10. All mainline valves shall be the same diameter as the pipeline. Yard piping shall include aboveground isolation valves.

2. Well pump control valves shall be piped such that each control valve has a bypass for maintenance purposes.

3. For operation and maintenance, an 8-inch wastewater collection line with a terminal manhole will be required for any well site.

G. Security and Safety:

1. The site shall be enclosed with an eight-foot tall masonry perimeter wall with lockable entrance in accordance with Chapter 2.

2. Access and security features shall be in accordance with the Security Master Plan.

3. Lighting shall be in accordance with the requirements of Chapter 7.

4. All access, safety, and structural components shall be designed per current OSHA requirements for the safety of City personnel.
   a) Devices shall conform to all applicable state and federal requirements for occupational safety and health.

H. Paving, Curb, and Gutter:

1. Paving, curbs, and gutters shall be designed in accordance with Chapter 2.

I. Disinfection:

1. Water production wells, including all portions of the well pump that come into contact with the well water, must be disinfected before being put into service for the first time and after each repair or maintenance operation.

2. Disinfection shall be in accordance with AWWA A100 and C654.

14.06 Water Production Well Equipment

A. Vertical Turbine Well Pumps:

1. Based on information contained in the Well Completion Report, the Engineer shall determine the following performance requirements:
   a) Design Capacity (gpm)
   b) Total Head at Design Point (ft.)
   c) Capacity at Secondary Design Point (gpm)
   d) Total Head at Secondary Design Point (ft.)
   e) Maximum Shutoff Head (ft.)
   f) Minimum Pump Efficiency at Design Point (%)
   g) Minimum Pump Efficiency at Secondary Design Point (%)
   h) Bottom Elevation of Pump Bowls (ft.)
   i) Elevation of Well Pump Slab (ft.)
   j) Maximum Pump Speed (rpm)
   k) Minimum Required Brake Horsepower (hp)
   l) Maximum Well Water Temperature (degrees F)
   m) Maximum Number of Pump Bowls
   n) Maximum Size of Pump Bowls

2. Manufacturers: As noted on the City's Preferred Vendor List.

3. Pump Base: High-grade cast iron, able to mount motor and supporting pump column.

4. Surface Discharge Outlet: ANSI B16.1, Class 125 flanged.

5. Pump Bowls: Close grained cast iron, smooth and free of casting imperfections.

6. Impellers: Polished bronze, enclosed type, statically and dynamically balanced, securely fastened to impeller shaft with keys, taper bushings, or lock nuts. Adjustable, vertically, by a nut in the motor.

7. Pump Shaft: Stainless steel Type 416, minimum 11-13 chrome, ground and polished. Diameter sized for total axial thrust plus weight of rotating parts supported by the shaft and horsepower transmitted. Maximum combined shear stress of 30 percent of elastic limit in tension or minimum 18 percent of ultimate tensile strength of shaft material.

8. Line Shaft: ASTM 108 Class C1045 steel, maximum RMS 40 surface finish. Furnish in maximum 20-foot lengths with ends faced squarely to provide alignment after installation. Couple with steel couplings with safety factor of 1.5 times shaft safety factor. Use left-hand threads to tighten during pump operation.

9. Tube Couplings and Line Shaft Bearings: Schedule 80 steel tube, maximum 5-foot sections enclosing the line shaft. Tube couplings shall be integral with rubber line shaft bearings, each containing oil grooves or separate bypass hole that will readily allow oil to flow through and lubricate the bearing below.

10. Discharge Head Assembly: Cast iron ASTM A48, Class 30, with tubing tension nut installed in head assembly to allow tension to be placed on shaft enclosing tube, and with provisions for sealing off thread at tension nut.

11. Pump Lubrication System: Provide a properly sized lubrication system at the pump consisting of a solenoid-operated, sight-feed drip lubricator and oil reservoir, constructed integral to the head or as a separate unit. Provide a 55-gallon drum of food grade mineral oil and a horizontal drum stand with double containment vessel adjacent to the well pump, but provide adequate clearance between the drum and the well pump/acoustical enclosure.

12. Shaft Enclosing Tube: Provide extra strong steel pipe in maximum 5-foot long interchangeable sections machined and threaded relative to accurately prepared end diameters. Provide square ends with axis for butt joints to maintain accurate alignment. Stabilize the tube in column pipe by hard rubber spiders at 40 feet on center.

13. Discharge Column Pipe: Provide standard weight steel pipe in nominal 20-foot long interchangeable sections, with a standard inside diameter of a minimum 10 inches or the size required to limit fluid friction loss to 4 feet per 100 feet of column length, whichever is greater. Machine ends and threads for proper alignment. Do not use seamless pipe, and lining and coating column pipe is not required.

14. Sounding Tube: Provide a stainless steel Type 304, 3/4-inch diameter, Schedule 40 sounding tube with threaded Type 304 stainless steel couplings. Furnish tube in nominal 20-foot lengths. Strap the tube to the column pipe every 20 feet using Type 316 stainless steel straps from the discharge head to the top of the bowl assembly.

15. Strainer: Provide a bronze strainer on the pump suction inlet.

B. Well Pump Motor:

1. Provide a vertical hollow shaft squirrel cage induction type motor with the following characteristics. Water-cooled motors are not acceptable.
   a) Speed: Compatible with the selected pump speed. Maximum allowable speed for well pump motors shall be 1,800 rpm.
   b) Insulation: Class F insulation with Class B temperature rise.
   c) Enclosure: Weather protected Type 1.
   d) Power: Suitable for operation on 480 volt, 3 phase, 60 Hz.
   e) Horsepower: Size to satisfy pump horsepower requirements.
   f) Service Factor: 1.15, not to be used in sizing motors.
   g) Mounting: On pump head.
   h) Rated premium efficiency.
   i) Temperature rating: Per Engineer and City requirements.

2. Stator Moisture Protection: Vacuum impregnation of epoxy.

3. Windings: Copper.

4. Space Heater in Each Motor Frame: 120 volt, 60 Hz, single phase.

5. Bearings: Selected to have AFBMA rated life of minimum 60,000 hours when operated continuously at rated motor speed and at total load.

6. Bearing Lubrication: Upper bearing shall be oil lubricated with visual level indicator, accessible drain, and filling plugs. Lower bearing shall be grease lubricated with easily accessible fittings.

7. Accessories: Lifting hooks and suitable base.

8. Over-Temperature Protection: Per Engineer and City requirements, with control modules as required based on type of protection.

9. Motor Plate: Stainless steel, indicating essential lubricating information such as type, viscosity, and frequency of changes.

10. Conduit Boxes: Provide bolted oversized conduit boxes with neoprene gaskets for electrical motor leads, and a separate conduit box for over-temperature protection leads.

C. Well Pump Solenoid Check Valve:

1. Provide a well pump solenoid check valve on the well pump discharge line with the following characteristics:
   a) Design: Globe pattern solenoid/check valve with ductile iron body, flanged ends, bronze trim, Buna N rubber diaphragm, suitable for a rated working pressure of 150 psi.
   b) Valve shall function as a check valve during power failure.
   c) Valve shall be normally closed and energized to open.
   d) Cla-Val example model number 636G-03BCDFSYKCX, size as determined by the Engineer. Acceptable manufacturers per the COS Preferred Equipment List

2. Valve shall be furnished with the following features and accessories:
   a) Adjustable opening and closing speed control (pilot valve) with stainless steel trim.
   b) Independent operating pressure line connection.
   c) Pilot system ball valves and wye strainer.
   d) Pilot valve shall be 120 volts single phase, with Class F coil and NEMA 4 enclosure.
   e) Limit switch shall be 120-volt single phase, with double pole, double throw switches, in a NEMA 4 enclosure. Cla-Val example model number X105L2W. Acceptable manufacturers per the COS Preferred Equipment List.
   f) Provide a service water connection to the valve from the potable water source for use in activating the pilot system

D. Well Pump Control Valve:

1. Provide a well pump control valve on the well pump to waste line with the following characteristics:
   a) Design: Globe pattern solenoid deep well pump control valve with ductile iron body, flanged ends, bronze trim, Buna N rubber diaphragm, suitable for a rated working pressure of 150 psi.
   b) Valve opening and closing rates shall be adjustable over a minimum range of 30 seconds to 2 minutes.
   c) Valve shall be normally open, and energized to close.

d) Cla-Val example model number 661G-02KCX, size as determined by the Engineer. Acceptable manufacturers per the COS Preferred Equipment List.

2. Valve shall be furnished with the following features and accessories:
   a) Adjustable opening and closing speed control (pilot valve) with stainless steel trim
   b) Independent operating pressure line connection.
   c) Pilot system ball valves and wye strainer.
   d) Four-way solenoid pilot valve, 120 volts single phase, with Class F coil and NEMA 3 enclosure.
   e) Limit Switch shall be 120-volt single phase in a NEMA 4 enclosure.
   f) Provide a service water connection to pilot system from the potable water source.

E. Acoustic Enclosure for Well Pump:

1. If the City determines in the CDR Phase that an acoustical enclosure is required, the Engineer shall make provisions to furnish and install the enclosure as described below. A photograph of an acoustic enclosure is shown on Figure 14.5.

2. Description: Furnish and install an 8-foot by 8-foot by 10-foot high prefabricated acoustical enclosure over the well pump and motor. The enclosure shall include two 36-inch by 7-foot high man doors and one discharge pipe double door. Walls, roof, and doors shall be of an all welded box construction consisting of an outer solid sheet and an inner perforated sheet with an absorptive material between.

3. Structural Performance: All wall panels shall be designed and constructed to withstand a 40 PSF loading. Roof panels shall withstand a 25 PSF live loading plus the loading of any roof-mounted equipment. The roof shall be designed for easy removal and replacement when well service is required. Stainless steel eyebolts shall be supplied integral to the roof for lifting.

4. Structural Calculations: All drawings, erection and assembly details, and structural calculations must be signed and sealed by an Engineer registered in the State of Arizona.

5. Acoustical Performance: The acoustical panels and components shall provide a minimum Sound Transmission Class (STC) rating per ASTM E90 of 41 dB and a minimum Noise Reduction Characteristic (NRC) per ASTM C423 of 1.00. The enclosure shall also be capable

of reducing the noise level of the pump, motor, and ventilation system to a maximum of 50 dB at a distance of 50 feet in any direction. The noise level of the pump motor shall be considered to be 85 dB at the source (based on an average of dB levels at each octave band ranging from 125 hertz to 8,000 hertz). Therefore, the enclosure shall be capable of reducing the noise level by a total of 35 dB (minimum) at a distance of 50 feet in any direction from the source.

6. Ventilation System: Provide a ventilation system consisting of silenced and screened intake and exhaust panels, a minimum of two 1,000 CFM wall mounted exhaust fans, and a thermostatically controlled control circuit.

7. Doors: Doors shall be of the same acoustical panel type and have the same acoustical characteristics as the wall and roof panel components. Provide heavy-duty industrial full mortise hinges, a passage set, magnetic jamb and header seals, and automatic drop seal type threshold. Door locks shall be keyed to match City master key system.

F. Other Provisions:

1. Any equipment or item that is required to complete the water production well installation, but is not specifically described in this chapter, shall be furnished and installed in accordance with applicable sections of the following chapters:
   a) Chapter 2 for miscellaneous site work
   b) Chapter 10 for pipe, fittings, valves, and appurtenances
   c) Chapter 11 for support systems.

14.07 Support Systems

A. Provide a potable water supply to the well site and protect the system by a RPPA in accordance with currently adopted code requirements. If the backflow preventer is mounted adjacent to a wall, it shall be mounted a minimum of 8 inches away from the wall and no greater than 4 feet high to allow for maintenance.

B. Service Water: Provide service water for housekeeping and landscaping from the potable water supply, downstream from the RPPA. Provide 3/4-inch frost-proof hose bibs with galvanized or epoxy-coated steel hose rack with 50 feet of 3/4-inch rubber hose.

C. Telephones and Communication: Well sites shall be furnished with a telephone board and four 2-inch buried conduits for telephone and security wiring in accordance with the following:

1. Conduits shall be extended to suitable junction boxes outside the well site facility.

2. Submit approved telephone company drawings as part of the project as-built drawings.

D. Freeze Protection: Provide heat tracing and insulation of small diameter water or chemical piping, including the small pilot control tubing on the control valves located outdoors, that is subject to freezing temperatures in accordance with the following:

1. Heat Tracing: Suitable for 120 volt, 60 Hz single phase power, equipped with a controller and designed to maintain the desired temperature for a useful life of 20 years. Heat tracing shall be in accordance with IEEE P515 - Testing, Design, Installation, and Maintenance of Electrical Resistance Heat Tracing for Industrial Applications, and IEEE 622 - Design and Installation of Electric Heat Tracing.

2. Pipe Insulation: Closed cell, elastomeric foam insulation suitable for temperatures of 0 degrees F to 220 degrees F. Provide UV resistant 26-gauge aluminum jacket.

E. Other Support Systems: Systems not specifically addressed herein, such as sanitary sewer and restroom facilities, will be evaluated by the City on a project-specific basis.

14.08 Electrical Systems

A. Electrical systems shall be designed in accordance with the requirements of Chapter 7.

B. The electrical system providing power to components of the water production well shall be designed by a qualified electrical engineer registered in the State of Arizona.

C. Standby Power: Water production well power distribution systems shall be designed with redundant or standby power in accordance with Chapter 7 such that:

1. Fault or loss of utility power will result in the disruption of greater than 30 minutes of electrical service to the water production well, including vital components and controls.

2. Standby generators shall be designed to operate water production wells and associated equipment and controls at rated capacity for not less than 24 hours.

14.09 Instrumentation and Control

A. The Engineer shall prepare a comprehensive controls strategy for the facility with the technical specifications for all SCADA, PLC, and instrumentation. All instrumentation and control shall be provided per the requirements of Chapter 8.

B. Instrumentation shall meet the requirements of Chapter 8, including switches, flow measurement, level measurement, and pressure measurement.

C. The Engineer shall require that a single integrator or subconsultant be responsible for all PLC programming and SCADA. This includes instrument installation, calibration, startup, testing, and loop checks.

D. The Engineer shall also require that the integrator provide detailed descriptions of each operation for every loop associated with the facility.

E. All SCADA and PLC programming will be provided with software licenses as well as unrestricted access so that the City can modify as needed.

F. Well Pump Controls, Alarms, and Monitoring: Instrumentation and switches for controls, monitoring, and alarms to SCADA shall be provided in accordance with requirements of Chapter 8. Provide the following:

1. START/STOP well pump function from remote work station.

2. AUTO or HAND mode of operation indication at SCADA.

3. RUN or STOP status indication at SCADA.

4. HIGH TEMPERATURE alarm indication at SCADA.

5. HIGH DISCHARGE PRESSURE alarm indication at SCADA.

6. ALARM reset command function from remote workstation.

7. Well pump discharge flow indication at SCADA.

8. Well pump-to-waste flow indication at SCADA.

9. Well pump discharge pressure indication at SCADA.

10. OPEN or CLOSED status indication for solenoid check valve at SCADA.

11. OPEN or CLOSED status indication for well pump control valve at SCADA.

14.10 Basic Control Descriptions

A. General: The On-Off operation of water production wells varies with the discharge mode. The following information is intended to be a brief description of the operation of a water production well, and is not intended to be a complete control description.

1. If the well is pumping directly to a water storage reservoir or to a groundwater treatment facility, pump control is based on the water level in the receiving reservoir. Both the high level (well pump off) and the low level (pump on) are user-adjustable to suit desired water volume and quality, and/or to control the number of well pump starts and stops per day.
   a) When a start request is received, the well pump starts and an adjustable timer circuit for the control valves energizes. With the well pump control valve on the pump-to-waste line normally open and the solenoid check valve on the pump discharge line normally closed, water from the well initially flows to waste. When the timer circuit times out (indicating that the well water has cleared up to an acceptable level), the well pump control valve begins to close and the solenoid check valve begins to open simultaneously. When these valve operations are complete, the well water is being delivered to the treatment process or the storage reservoir.
   b) When a stop request is received, the well pump control valve opens and the solenoid check valve closes. When these valve operations are complete, the well pump stops and the discharge water flows to waste while the pump stops. While the pump is stopping, a backspin timer is energized which prevents the well pump from re-starting until the pump has come to a complete stop.

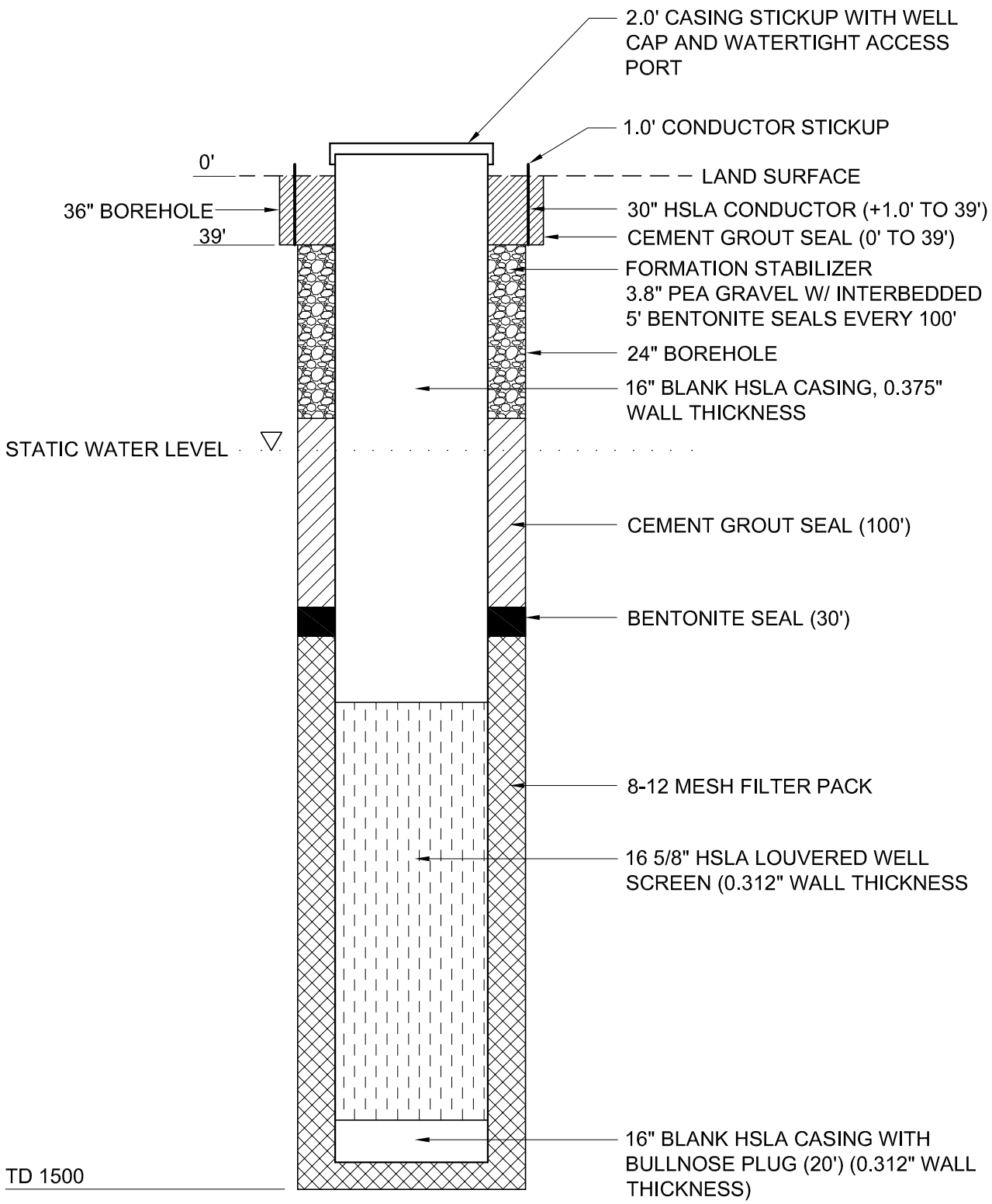

NOT TO SCALE

CASING CENTRALIZERS EVERY 40 FEET

FINAL

REVISIONS	DWN	APVD	APVD	DATE

CITY OF SURPRISE

Maricopa County, Arizona

Water and Wastewater Guidelines

DESIGNED G.S.
DRAWN PAT
CHECKED
APPROVED
APPROVED
DATE APRIL 2011

SURPRISE
ARIZONA

TYPICAL PRODUCTION WELL

SCALE

FIGURE 14.1

REV. 0

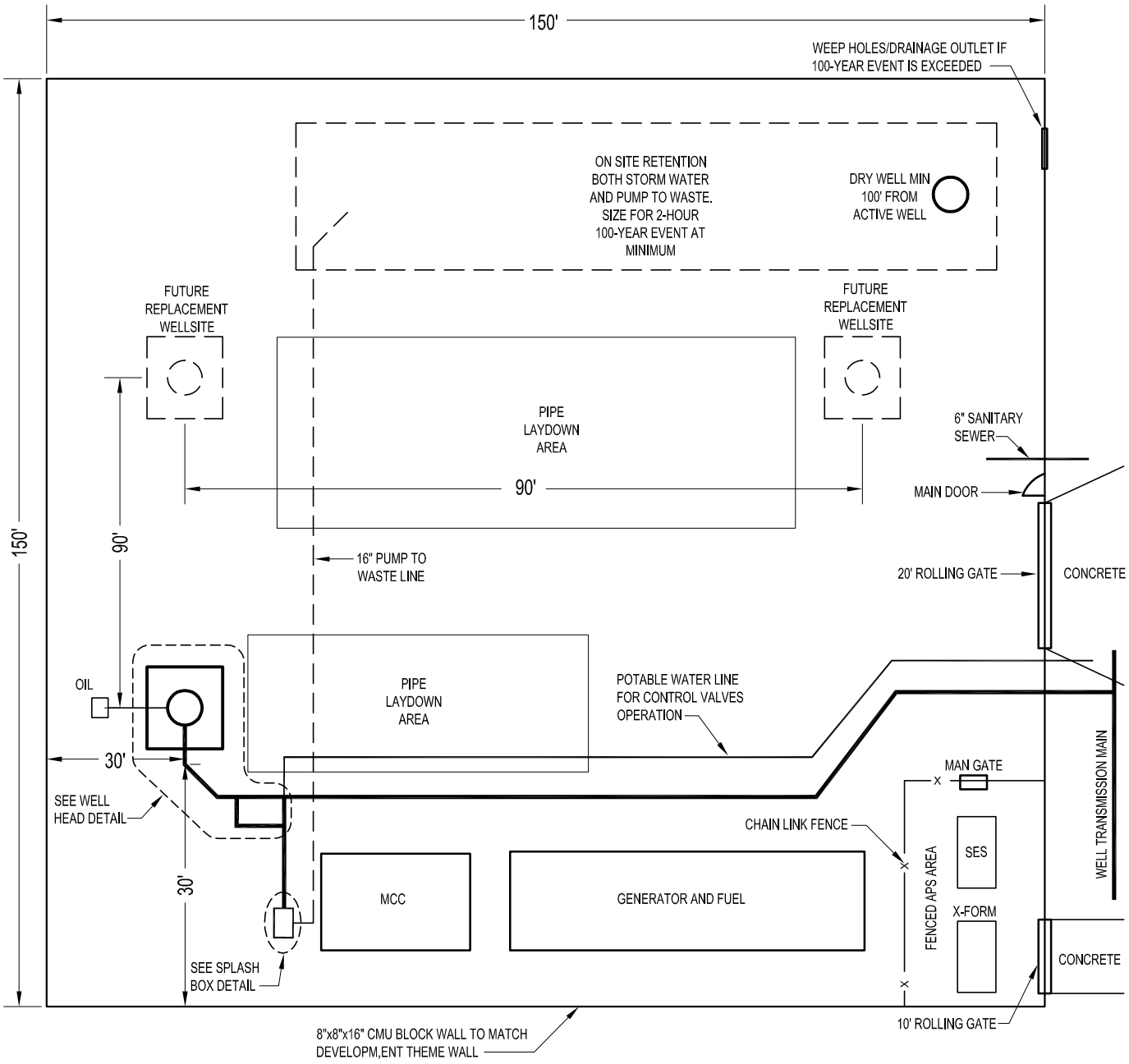

NOTE: ENTIRE WELL SITE FINISHED WITH AGGREGATE (MADISON GOLD PREFERRED) $\frac{1}{4}$" MINUS 1 $\frac{1}{2}$" DEEP OVER 3" OF COMPACTED AB, EXCEPT FOR THE RETENTION BASIN.

FINAL

REVISIONS	DWN	APVD	APVD	DATE

CITY OF SURPRISE

Maricopa County, Arizona

Water and Wastewater Guidelines

DESIGNED G.S.
DRAWN PAT
CHECKED
APPROVED
APPROVED
DATE APRIL 2011

SURPRISE ARIZONA

PRODUCTION WELL SITE PLAN

SCALE NO SCALE

FIGURE 14.2

REV. 0

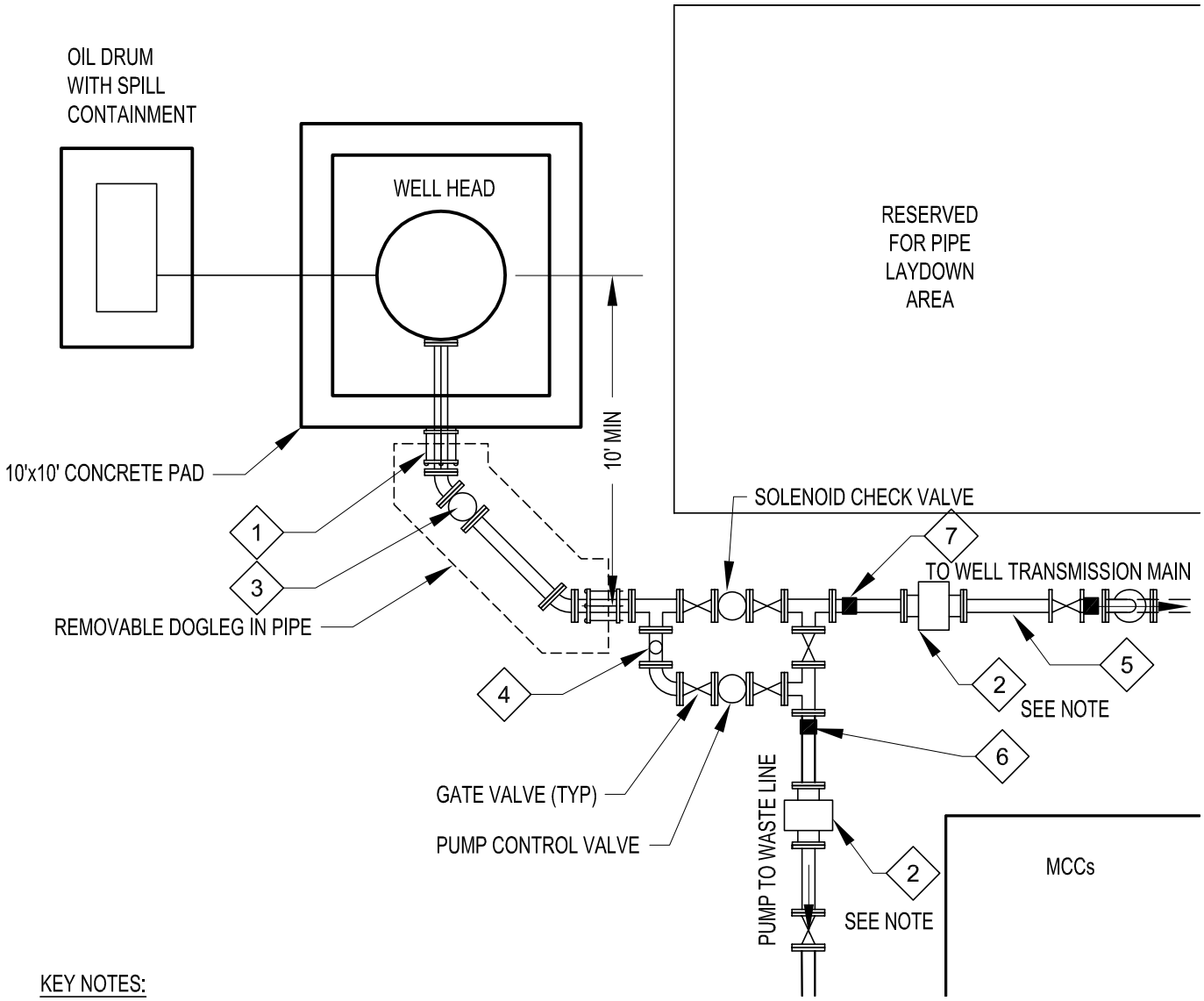

KEY NOTES:

1. HARNESSED FLEX COUPLING (TYP)
2. MAGNETIC FLOW METER (TYP)
3. AIR VALVE
4. PRESSURE SWITCH
5. COMBINATION AIR VALVE
6. SAMPLE TAP
7. SAMPLE TAP, PRESSURE GAUGE AND PRESSURE TRASMITTER

NOTE:

PROVIDE STRAIGHT PIPE (NO VALVES OR FITTINGS) MINIMUM 10 PIPE DIAMETERS UPSTREAM AND 5 PIPE DIAMETERS DOWNSTREAM OF FLOW METERS.

FINAL

REVISIONS	DWN	APVD	APVD	DATE

CITY OF SURPRISE

Maricopa County, Arizona

Water and Wastewater Guidelines

DESIGNED G.S.
DRAWN PAT
CHECKED
APPROVED
APPROVED
DATE APRIL 2011

SURPRISE ARIZONA

WELL HEAD DETAIL

SCALE NO SCALE

FIGURE 14.3

REV. 0

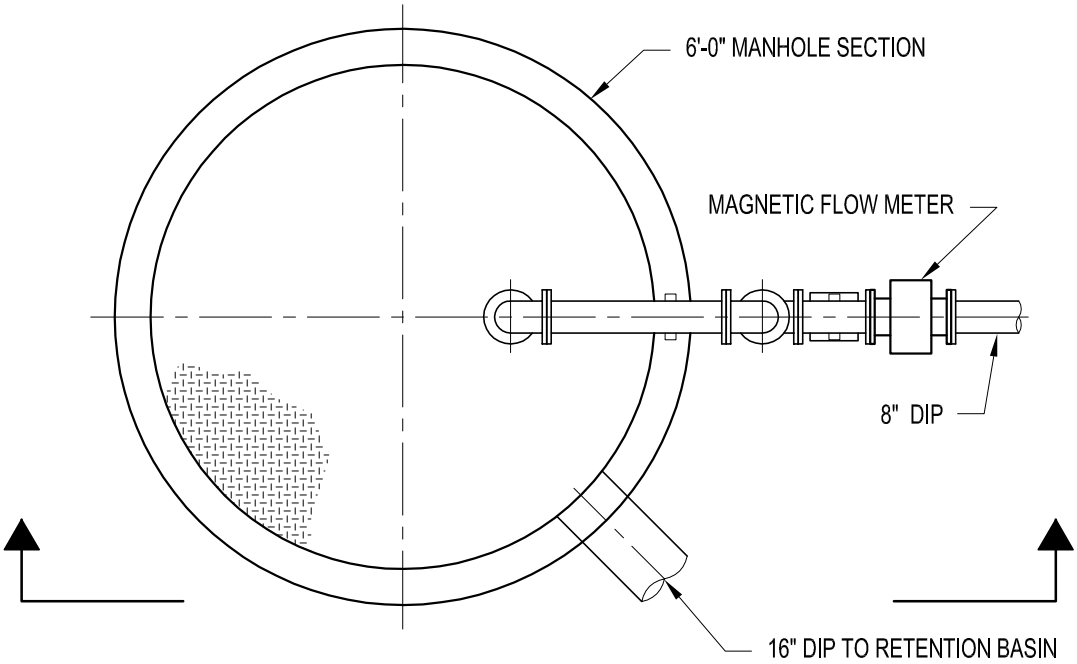

PLAN

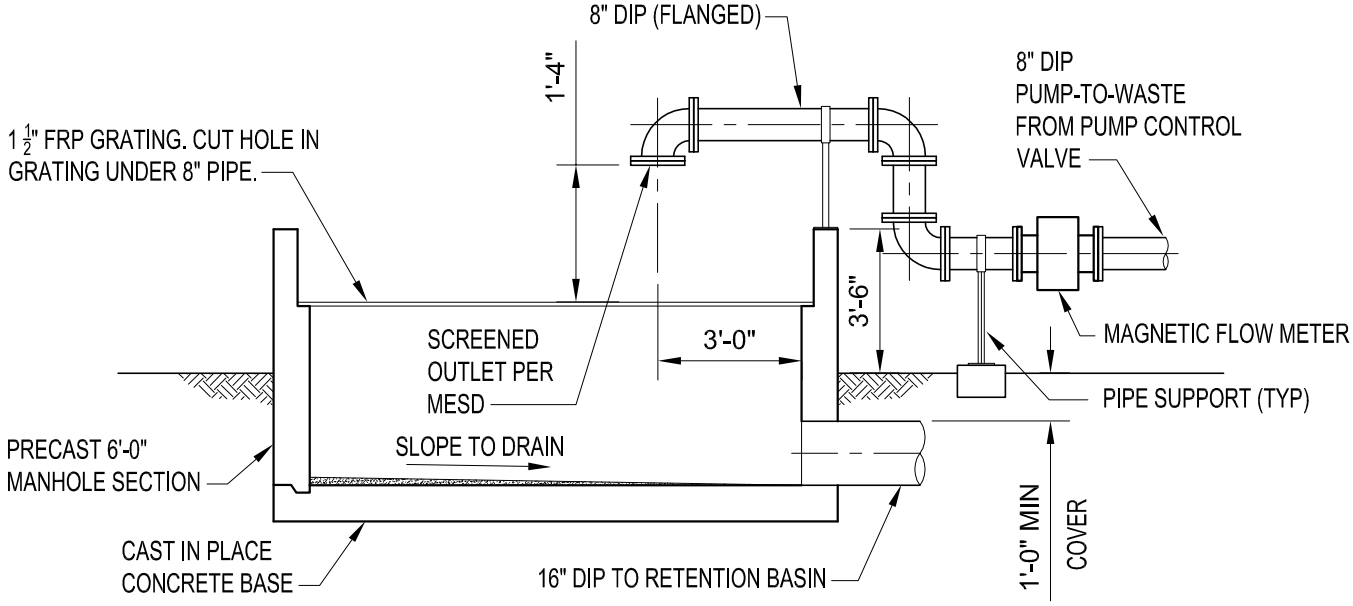

SECTION

FINAL

REVISIONS	DWN	APVD	APVD	DATE

CITY OF SURPRISE

Maricopa County, Arizona

Water and Wastewater Guidelines

DESIGNED G.S.
DRAWN PAT
CHECKED
APPROVED
APPROVED
DATE APRIL 2011

SURPRISE
ARIZONA

SPLASH BOX DETAIL

SCALE NO SCALE

FIGURE 14.4

REV. 0

FINAL

REVISIONS	DWN	APVD	APVD	DATE

CITY OF SURPRISE

Maricopa County, Arizona

Water and Wastewater Guidelines

DESIGNED G.S.
DRAWN PAT
CHECKED
APPROVED
APPROVED
DATE APRIL 2011

SURPRISE
ARIZONA

ACOUSTIC ENCLOSURE

SCALE

FIGURE	REV.
14.5	0

Appendix A

WELL TECHNICAL SPECIFICATIONS

SURPRISE
ARIZONA

CITY OF SURPRISE

Production Well
Technical Specifications

Revised
September 8, 2006

City of Surprise
Production Well Construction
Technical Specification

Table of Contents

1.0 General
- 1.1 Scope of Work
- 1.2 Definitions
- 1.3 Qualifications
- 1.4 Performance of Work
- 1.5 Contractor Responsibilities
- 1.6 Consultant Responsibilities
- 1.7 Visitation and Inspection
- 1.8 Confidentiality
- 1.9 Submittals
- 1.10 Daily Driller's Report
- 1.11 Delivery, Storage, and Handling of Materials
- 1.12 Rejection of Materials, Work, or Equipment
- 1.13 Site Protection
- 1.14 Site Safety Plan
- 1.15 Dust Control Plan
- 1.16 Construction Water Plan

2.0 Well Abandonment and Replacement

3.0 Drilling Fluids

4.0 Surface Casing Drilling, Materials, and Installation

5.0 Pilot Borehole and Reamed Borehole Drilling

6.0 Pilot Borehole Geophysical Logging

7.0 Pilot Borehole Zonal Sampling and Testing

8.0 Reamed Borehole Geophysical Logging

9.0 Production Well Materials and Installation

10.0 Production Well Development

11.0 Production Well Aquifer Testing

12.0 Production Well Spinner Survey

13.0 Production Well Plumbness and Alignment

14.0 Production Well Video Survey

15.0 Acceptance of Work

1.0 General

1.1 Scope of Work

The work includes the installation of a production well that consists of drilling and completing a well to the depth specified in the design plans using the reverse circulation rotary drilling method. The work also includes the collection of drill cutting, performing geophysical logging, zonal sampling and testing to aid in the design of the final production well, which will be developed by the Consultant and approved by the City. After the final design of the well has been completed the Contractor shall install the well casing, screen, and annual materials and develop the well by swabbing, airlifting, and pump and surge methods. Aquifer testing will follow the well development and will include a step-rate pumping test, constant rate pumping test, a recovery test, and a dynamic spinner flow meter survey; followed by a well video and plumbness and alignment test of the well. The Owner reserves the right to drill beyond the depths specified, or to stop at lesser depths, depending on subsurface conditions.

The work includes the furnishing of all labor, materials, equipment, tools, supplies, transportation, appurtenances, drill rigs, pumps, motors, piping, drilling makeup water, and services, unless specifically excepted herein, necessary for the complete and satisfactory drilling, construction, development, and testing and equipping of the well.

The well shall be drilled and completed pursuant to the plans, specifications, and AWWA A100. Any conflicts in these documents shall be brought to the attention of the Consultant for resolution.

1.2 Definitions

A. Owner. Shall be understood to represent the developer and/or property Owner.
B. Consultant. Shall be understood to represent the person, firm, or corporation with whom the Owner will execute an agreement setting forth the terms and conditions for the work to be performed as specified herein.
C. City. Shall represent the City of Surprise.
D. Contractor. Shall represent the person, firm, or corporation with whom the Owner will execute an agreement setting forth the terms and conditions for the work to be performed, as specified herein.
E. Subcontractor. Shall represent the person, firm, or corporation with whom the Contractor executes a secondary agreement for a portion of the scope of work.
F. Geophysical Logger. Shall represent the person, firm, or corporation with whom the Contractor executes a secondary agreement for the geophysical logging of the well.
G. Drilling Fluid Engineer. Shall represent the person, firm, or corporation with whom the Contractor executes a secondary agreement for the control and testing of the drilling fluid.

1.3 Qualifications

The Contractor shall have no less than five (5) years of local (within the Basin and Range geologic province of Arizona) experience using reverse circulation rotary drilling. The Contractor must have successfully completed no less than five (5) separate well installation

projects in the Phoenix, Arizona metropolitan area, within the past three (3) years involving installation of public water supply well with similar casing dimensions and well depths as specified in the plans.

The Contractor shall hold 1) a valid Arizona Department of Water Resources (ADWR) Well Driller's License in the reverse circulation category; 2) a Registrar of Contractor License type A, A-4, A-16 or L-53; 3) a City of Surprise business license; and 4) all other licenses required by federal, state, county, or municipal rules and regulations. Subcontractors may also hold a valid Well Driller's License in addition to that of the Contractor but not in lieu of the Contractor's License.

1.4 Performance of Work

The Contractor shall provide all the labor, equipment, and materials necessary to complete the work. The Contractor shall employ only competent employees for the execution of the work. The Contractor work crew shall include no less than three (3) workers at all times when drill pipe is being installed or removed (i.e., at all times while the Contractor work crew is tripping or running pipe). In addition, the Contractor shall maintain no less than three (3) workers on site throughout the well installation operations (including installation of the well casing, well screen, centralizers, filter pack sand, bentonite seals, cement seals, and formation stabilizer). All operations shall be performed under the direct and personal supervision of an Arizona-licensed well driller. The Contractor shall assign a foreman (tool pusher) who has been approved by the Consultant to oversee all work. The Contractor foreman shall be present at the well site at least once daily during each drilling crew shift, during all critical operations, and as requested by the Consultant. The Contractor foreman shall provide to the Consultant a written certification that they have read and fully understands this technical specification prior to mobilization to the well site.

The Contractor shall construct the well in accordance with the Rules and Regulations of the ADWR, Article 8, Well Construction and Licensing of Well Drillers. The well construction shall also comply with the guidelines of the Arizona Department of Health Services Engineering Bulletin No. 10, and all other applicable Federal, State, County, or local regulations.

Rejection of any materials, work, or equipment by the Consultant shall be at the Contractor's expense, and at no cost to the Owner. Replacement materials, work, or equipment that is in accordance with these specifications and approved by the Consultant will be paid for by the Owner in accordance with this specification.

The Contractor shall provide, at its own cost, all water required for its operations under the contract. This includes, but is not limited to, water used for drinking, dust control, and construction of the well.

The Contractor shall provide, at its own cost, all power required for its operations under the contract.

The Contractor shall provide, at its own cost, trash service at the well site during all operations of this project. The trash service shall be adequately maintained, and shall be made available to the Consultant, Owner, and City personnel for reasonable use, at no cost.

The Contractor shall provide, at its own cost, a portable restroom facility at the well site during all operations of this project. The restroom shall be adequately maintained, and shall be made available to the Consultant, Owner, and City personnel for reasonable use, at no cost.

1.5 Contractor Responsibilities

If a work delay, deficiency of work performance and/or a material deficiency is caused by the Contractor failing to comply with any item of these specifications, the Contractor shall bear the burden of additional expenses, including any additional Consultant charges assessed to the Owner as a direct result of the delay or deficiency. This includes delays due to equipment failure, if the Consultant determines that the equipment failure could have been prevented through proper maintenance.

1.6 Consultant Responsibilities

The Consultant shall obtain the necessary drilling permits from the Arizona Department of Water Resources (ADWR) prior to commencement of drilling. The Consultant will also obtain a National Pollution Discharge Elimination System (NPDES) permit for the discharge of fluids into a local drainage, if needed. The Consultant shall manage the field activities on behalf of the Owner and shall have authority over the Contractor as directed by the Owner. The Consultant shall review and approve invoices submitted by the Contractor.

1.7 Visitation and Inspection

The Consultant, Owner, or City representatives shall, at any reasonable time during the term of work be entitled to review the Contractor's facilities, its program operation, and the records that pertain to the work.

The Contractor agrees that the Consultant, Owner, or City, or any of their duly authorized representatives, shall have access to the Contractor's facilities and have the right to examine books, documents, and records of the Contractor involving transactions related to these specifications.

The Contractor further agrees to include in all subcontracts hereunder, if any, a provision that the Subcontractor agrees that the Consultant, Owner, or City, or any of their duly authorized representatives, shall have access to the Subcontractor's facilities and have the right to examine any books, documents, and records of the Subcontractor involving transactions related to the subcontract and these specifications.

1.8 Confidentiality

The Contractor shall not disclose any information relating to this project or any well site to anyone other than the Owner, Consultant, or City without written permission from the Owner, except as may be required by law. At all times during the performance of the Contractor's services, the Contractor, Subcontractor, and agents shall treat the work conducted by the Contractor and its Subcontractors and the results thereof as confidential and proprietary to the Owner and the City.

Any questions regarding the purpose or scope of work that are directed to the Contractor from individuals or entities other than representatives of the Owner, Consultant, or City while work is being conducted for this project, should be directed by the Contractor to the Consultant or Owner.

The Contractor shall inform its employees of this confidentiality requirement, and shall obtain non-disclosure agreements from all Subconsultants who will have involvement in the performance of any of the work, and provide the Consultant with copies of the executed non-disclosure agreements. This provision shall survive the termination of the contracted work tasks.

1.9 Submittals

The Contractor shall be responsible for the timely and accurate submission of all submittals. This includes all shop drawings, materials, data, records, test results, reports, and invoices.

Shop drawings and material submittals shall be reviewed and approved by the Consultant prior to being ordered, purchased, and installed. This includes, but is not limited to, the following: well casing, well screen, and annular materials. The Consultant may, at its discretion, reject any materials that do not meet the specifications or the requirements of the Consultant and the City.

Data, records, test results, and reports shall be reviewed and approved by the Consultant.

Any additional standby time or other costs incurred by the Contractor as a result of the rejection of a submittal shall not be compensated by the Owner and shall be the sole responsibility of the Contractor.

Approval of a submittal shall not in any way relieve the Contractor of the responsibility for completeness, accuracy, errors, and omissions.

1.10 Daily Driller's Report

The Contractor shall maintain a daily log of the activities at the site from the time the Contractor mobilizes to the site until the Contractor demobilizes and shall provide a copy to the Consultant daily. The Daily Driller's Report shall be recorded on forms approved by the Consultant. The reports shall give a complete description of all formations encountered; number of feet drilled; number of hours on the job; shutdown due to breakdown; any occurrence of lost circulation conditions, low penetration, fluid additives used; length and type of casing set; volumes of filter pack and annular seal installed; and such other pertinent data as may be requested by the Consultant. Contractor personnel will submit the reports to the Consultant daily.

1.11 Delivery, Storage, and Handling of Materials

The Contractor shall be responsible for the timely delivery of materials to the work site. This includes, but is not limited to, the following: well casing, well screen, and annular materials. All materials shall be delivered to the site or to an approved storage yard in accordance with the manufacturer's instructions and requirements, except as modified by the plans, specifications or as directed by the Consultant or the City. The materials shall be stored in such a manner as to

prevent any damage or contamination. Any damage to the materials shall be reported to the Consultant and all repairs must be approved by the Consultant.

1.12 Rejection of Materials, Work, or Equipment

Rejection of any materials, work, or equipment by the Consultant or the City shall be at the Contractor's expense and at no cost to the Owner. The Contractor shall be responsible for the compliance of all material requirements and any materials that do not meet the material requirements as determined by the Consultant or the City shall be rejected.

1.13 Site Protection

The Contractor shall take all necessary precautions to preserve the each well site, as nearly as practical, in their present condition. The Contractor shall be responsible for replacing any damaged items. The Contractor shall provide, at its own cost, an adequate roll-off bin to contain all debris and trash collected at the site. All litter and debris will be cleaned up daily and placed in the roll-off bin for off-site disposal. The Contractor is responsible for the location and clearance of all underground utilities using Blue Stake, a private utility location service, or both. The Contractor shall be responsible for any damage resulting from its failure to identify and avoid underground utilities.

A plastic tarp (at least 6 mil) and berm shall be placed beneath the drilling rig during mobilization to protect the site and contain any oil or hydraulic fluid spills or leaks, and will remain beneath the rig until demobilization. A plastic tarp and berm shall also be placed beneath other stationary equipment such as air compressors, auxiliary lights, welding devices and fuel tanks, and beneath the pump rig and auxiliary equipment during the well testing activities. Compressed air introduced into the well during drilling, sampling, or well development must be treated by passage through a carbon or coalescing filter to remove organic contaminants (e.g., compressor lubrication oil).

If there is an interruption in work, such as mechanical delay, waiting periods required for cement cure, installation of a test pump, or other instances when the tools are removed from any wells and the well is left unattended, a locking cover, tack-welded steel cover, or other Consultant-approved method of securing the well head shall be installed. During interruptions of work when the tools remain in the well, such as inclement weather or other circumstances, the well opening shall be covered to prevent the introduction of undesirable material into the well and to ensure public safety.

The Contractor shall secure the working area around the well site with temporary chain link fencing to prevent unauthorized access to the site and the accidental injury of people or animals. In addition, all open pits must be fenced or flagged to prevent the accidental injury of people or animals. The Contractor will provide all fencing and flagging at its own cost. All fencing and flagging shall be approved by the Consultant.

Water pumped from the well during drilling, sampling, and development operations shall be directed to an area adjacent to the well site, or as directed by the Owner or Consultant, where it will not cause damage to the property, contamination of other wells or waterways, or creation of a nuisance.

After completion of the work, the Contractor shall remove all debris, waste, trash, oil-stained dirt, and unused materials or supplies and shall obliterate all temporary construction facilities such as temporary work areas, temporary structures, and stockpiles of excess or waste materials and shall restore the site, as nearly as possible, to its original condition. In addition, any residual mineral oil within the well casing resulting from the use of test pumping equipment shall be removed prior to final acceptance of the well. The cuttings disposal and site cleanup must be approved by the Consultant.

1.14 Site Safety Plan

The Contractor must institute a Site Safety Plan for this project, in accordance with applicable Occupational Safety and Health Administration (OSHA) requirements. The Contractor is responsible for assuring that Contractor personnel and Subcontractors are thoroughly familiar with the Site Safety Plan for the proposed work. Contractor personnel are required to have been trained in the use of personal safety equipment required by the Site Safety Plan. A copy of the Site Safety Plan must be kept at the well site and shall be available to all Contractor personnel for review. The Contractor shall be responsible for having sufficient personal safety equipment at the work site for each of the Contractor personnel to comply with provisions of the Site Safety Plan. At a minimum, this shall include the following:

1. A first aid kit;
2. A fully recharged and operable type ABC dry chemical fire extinguisher; and
3. An operable mobile telephone located at each well site. The rig mobile phone will be made available to the Consultant, Owner, and City personnel for reasonable use, at no charge.

The Contractor shall meet the requirements of the Site Safety Plan at its own cost.

1.15 Dust Control Plan

The Contractor is responsible for dust control as required by public authorities and the Owner. The Contractor will be required to adhere to the Owner's approved Dust Control Plan. Any violations of the Dust Control Plan will be the responsibility of the Contractor and the Contractor shall pay all applicable fines.

The Contractor is responsible to apply water for dust control to work areas or access roads as required to meet State, County, or local dust control ordinances, or as requested by the Consultant or Owner. The Contractor is responsible for acquiring necessary permits required by Maricopa County for dust control and shall meet these requirements at its own cost.

The Contractor shall effectively subdue (palliate) dust in the working area, access roads, and storage areas related to this specification, except during such periods as other Contractors may be performing work in these areas. Such dust palliation shall consist of intermittent watering and sprinkling of such frequency as will satisfactorily allay the dust during all hours that work is being performed.

1.16 Construction Water Plan

Water used for the construction of the well shall be reviewed and approved by the Consultant prior to construction. The Contractor will be responsible for obtaining an adequate flow rate of construction water for all operations under this specification. The Contractor will also be responsible for any and all costs to provide and transport the water, and for any coordination, permits, and/or costs associated with traffic control and road crossings that may be required to convey water to the well site.

The Contractor shall submit to the Consultant a Construction Water Plan for review and approval. At a minimum, the Plan shall identify the source and quantity of water to be used, shall allow for the Consultant to obtain a representative sample of the water for testing, and a drawing showing the location of the well site, the source water location, and the water lines necessary to convey the water to the well site. The drawing shall also include any road crossings and the method used to cross the roads and traffic control.

*** End of Section ***

2.0 Well Abandonment and Replacement

2.1 General

Should the well be lost due to any negligent action on the part of the Contractor or their Subcontractor (as determined by the Consultant), including a result of a material or equipment defect or deficiency, the well shall be abandoned at no cost to the Owner. The Contractor shall credit the Owner for any and all costs associated with the lost well, and this credit shall be applied against any additional Contractor charges associated with the replacement well.

If the loss of the well was not due to any negligent action of the Contractor (as determined by the Consultant), the Owner shall provide reimbursement for the replacement well on the basis of the unit costs presented in the Contractor's Bid Schedule.

The exact method of the well abandonment shall be reviewed and approved by the Consultant and the City. At a minimum, the well shall be abandoned in accordance with AAC R12-15-816.

The Consultant shall recommend for approval by the Owner and the City a suitable location for the replacement well. The replacement well shall be completed in accordance with the plans, specifications, terms, and conditions herein.

2.2 Submittals

A. Proposed well abandonment plan.
B. Determination by the Contractor of the amount of the credit to be applied against the replacement well costs.

2.3 Measurements and Payments

A. If the loss of the well was due to any negligent action of the Contractor, the Contractor shall credit the Owner for any and all costs associated with the lost well, and this credit shall be applied against any additional Contractor charges associated with the drilling and completion of the replacement well.
B. If the loss of the well was not due to any negligent action of the Contractor, the Owner shall provide reimbursement for the replacement well on the basis of the Contractors unit costs.

*** End of Section ***

3.0 Drilling Fluids

3.1 General

The Contractor shall be responsible for maintaining the quality of the drilling fluid to ensure, at a minimum, the following.

1. Protection of water-bearing and potential water bearing formations exposed to the borehole
2. Representative samples of the formation materials and groundwater
3. Maximum development capacity and optimum potential yield of the completed well
4. Inhibition of the formation and prevention of formation-caused drilling problems (e.g., heaving sands, swelling clays, lost circulation)
5. Protection of the integrity of the borings during drilling, zonal sampling, and well installation operations
6. Complete and accurate geophysical logging of the boreholes

During the drilling of the pilot borehole and production borehole, and the installation of the well casing, screen, and annular materials, the Contractor will be responsible to minimize the chemical and biological disturbance of the vadose zone and saturated alluvial matrix. The use of organic drilling fluid materials (such as starch, guar, or cottonseed hulls) will not be accepted for drilling. Material Data Safety Sheets (MSDSs) from the manufacturer for all drilling fluid additives must be provided to the Consultant for review and approval prior to their use. The Consultant reserves the right to reject any and all proposed additives.

3.2 Makeup Water

The Contractor shall take all necessary precautions to ensure that chemical quality of the construction water is not impaired during transport from the source area to the storage area or well site. The Contractor shall provide the Consultant the ability to obtain samples of the construction water for laboratory chemical analyses to ensure that no contaminates are present and that the water is suitable for drilling and construction of the well. The makeup water shall be reviewed and approved by the Consultant prior to use.

3.3 Drilling Fluid Control Plan

The Contractor shall provide a drilling fluid control plan to the Consultant prior to the start of drilling. The plan will outline specific drilling fluid additives the Contractor plans to use, how anticipated changes in the drilling conditions will affect the drilling fluid control plan, fluid testing procedures, and equipment that will be used. The Consultant must approve the drilling fluid control plan. Drilling fluid additives shall be certified by the National Sanitation Foundation (NSF) and approved by the Consultant.

3.4 Drilling Fluid Testing

The Contractor shall retain an experienced Drilling Fluid Engineer as a Subcontractor. The Contractor's selection of a Drilling Fluid Engineer will be subject to review and approval by the

Consultant. The Drilling Fluid Engineer will be available within a 2-hour travel time of the site during all drilling and well construction operations.

Drilling fluid tests shall be performed by the Drilling Fluid Engineer during periods when any drilling fluid additives (not only clear water) are being circulated in the borehole. Physical and chemical properties of the drilling fluid are to be measured in accordance with the procedures of the API Standard RP 13B, "Standard Procedures for Testing Drilling Fluids". Samples tested are those collected at the rig discharge line, with care taken to assure a true and representative sample is collected. Drilling fluid tests shall be conducted by the Drilling Fluid Engineer at a minimum of 1) every 24 circulating hours, 2) when significant changes to the drilling fluid are made, 3) whenever conditions appear to have changed or when problems arise, or 4) at the request of the Consultant.

The Contractor shall have an Imhoff Cone, Marsh-type viscosity funnel, and a mud scale at the site and, upon request, will be made available to the Consultant.

The Contractor shall maintain current records at the site at all times to show 1) the time, depth, and results of all drilling fluid tests, 2) all materials added to the system, (i.e., kind, amount, time, and depth), and 3) variances or modifications from the agreed-upon fluid program, such as time, depth, reason, and authorization.

The Contractor is responsible for maintaining an adequate supply of drilling fluid additives at the drilling site and for the removal of all drilling fluids and additives from the borehole during development of the well.

3.5 Drilling Fluid Reconditioning

In accordance with applicable provisions of the AWWA Standard A100 for water wells, these specifications, or at the direction of the Consultant, the drilling fluid shall be reconditioned prior to the installation of the filter pack, until it has the following properties.

1. Weight – no greater than 9.1 lb/gal (68 lb/ft3);
2. Viscosity – no greater than 30 seconds per quart; and
3. Sand content – no greater than 1 percent by volume.

At the discretion of the Consultant, the above standards may be exceeded in cases where different drilling fluid properties are required to protect or stabilize the well due to unstable borehole conditions, or other site-specific circumstances. The Contractor shall adhere to the standards listed above, unless otherwise approved by the Consultant.

3.6 Mud Pit

The drilling fluids and drill cuttings shall be contained at the site in temporary excavated or above ground mud pits to be provided by the Contractor. The mud pit shall have a minimum depth of 6 feet and a total volume no less than that of the reamed borehole. The pits shall contain at least one baffle, to assist with the separation of cuttings and suspended solids from the drilling fluid. The specific dimensions and design of the mud pits must be approved by the Consultant.

Upon completion of the work, the excavated mud pits shall be drained and allowed to dry to the maximum extent possible before backfilling. The mud pit excavation shall be filled with self-compacting aggregate to avoid future subsidence of the pit area. The compaction of the fill material must meet the approval of the Owner or Consultant. Drilled cuttings shall be spread evenly in a thin layer at the well site, such that they do not pose a threat to the existing vegetation or drainage or impact future construction at the well site.

3.7 Lost Circulation

Lost circulation is a loss of drilling fluid to the formation that exceeds the maximum available discharge rate of water into the borehole, to the extent that the fluid level in the annulus outside the drill pipe cannot be maintained to a level above the base of the surface casing for at least one (1) hour, due to no fault of the Contractor.

During pilot borehole or production borehole drilling operations, if lost circulation occurs at no fault to the Contractor the Owner will compensate the Contractor. If circulation is lost due to the actions of the Contractor (e.g., excessive fluid weight) then the Contractor shall regain circulation at no cost to the Owner.

The Contractor is responsible to notify the Consultant immediately upon each occurrence of lost circulation and to document the times, quantities, and circumstances of lost circulation during each occurrence. Failure of the Contractor to promptly notify the Consultant of lost circulation will void the Contractor's opportunity to implement this clause, but will not affect the Contractor's responsibility to maintain the integrity of each borehole.

The conditions of this Section shall apply from the beginning of the period of lost circulation, and shall continue only until such time that the drilling fluid level can be maintained within the surface casing. After an initial lost circulation event has occurred, should circulation be lost again, the conditions of this paragraph will go into effect immediately, and continue until such time as drilling fluid circulation is regained.

3.8 Submittals

A. Drilling Fluid Log. During the drilling of the borehole, the Contractor shall log the drilling fluid properties. The drilling fluid properties shall be recorded on an American Petroleum Institute (API) approved form. The drilling fluid records shall be available for review by the Consultant, Owner, and City. The drilling fluid log shall be submitted to the Consultant upon completion of each day's work activities.
B. Drilling Fluid Control Plan.
C. Material Data Safety Sheets (MSDSs) from the manufacturer for all drilling fluid additives must be provided to the Consultant for review and approval prior to their use.
D. The specific dimensions and design of the mud pits must be approved by the Consultant.

3.9 Measurements and Payments

A. Payment for all labor, equipment, and materials will be made on a lump sum basis.

B. Lost circulation due to no fault of the Contractor. The Owner will compensate the Contractor for the period of drilling at the Contractor's hourly rate, in lieu of footage compensation. The Owner will also provide compensation at a rate of cost plus 10 percent markup to the Contractor for all drilling fluid materials and additives used during the period of Lost Circulation Conditions.
C. Lost circulation due to fault of the Contractor. All costs to regain circulation shall be at no cost to the Owner.

*** End of Section ***

4.0 Surface Casing Drilling, Materials, and Installation

4.1 Surface Borehole Drilling

The surface casing borehole may be drilled using the rotary or bucket auger (solid stem auger) drilling method. The borehole shall be drilled to a minimum 36-inch diameter and to a minimum depth of 39 feet or as directed by the Consultant.

4.2 Plumbness and Alignment

The borehole shall be sufficiently straight and plumb as to allow for the unobstructed installation of the surface casing and the uniform placement of the sand cement grout seal.

The surface casing shall be sufficiently straight and plumb as to allow for the uniform placement of the sand cement grout seal and to allow for the unobstructed drilling of the pilot borehole, reaming of the pilot borehole, and installation of the well casing.

The Consultant shall review and determine compliance with the plumbness and alignment requirements. If the borehole or surface casing fails to meet the plumbness and alignment requirements the Contractor must correct the plumbness and alignment to the satisfaction and approval of the Consultant and the City. Plumbness and alignment correction costs will be borne by the Contractor.

4.3 Drill Cuttings

During the drilling of the surface borehole the Contractor shall collect and preserve two (2) unwashed samples of the drill cuttings at ten (10) foot intervals. The first sample shall be a quart-sized sample and shall be placed in a plastic bag and clearly labeled with the sample interval. The second sample shall be preserved in 4½-inch by 6-inch cloth sacks (Hubco or approved equivalent) and clearly labeled with the depth interval. At the completion of the surface borehole drilling the Contractor shall provide the sacked drill cuttings to the Consultant. The remaining drill cuttings shall be spread in a thin layer over the surface of the well site.

4.4 Surface Casing Materials

The surface casing shall be new low carbon steel (LCS) and manufactured in accordance with American Society for Testing and Materials (ASTM) Specification A53 Grade B steel or ASTM Specification A139 Grade B steel and be free from any material defects. The surface casing shall be 40-feet long, 30-inch outside diameter, and have a minimum 0.375-inch wall thickness.

4.5 Cement Grout Seal Materials

The following materials are acceptable for the sealing of the surface casing.

1. Sand Cement
2. Neat Cement

The sand cement grout seal material shall consist of cement slurry containing 5.2 to 6.0 gallons of water per 94-pound sack of Portland cement. The Portland cement shall conform to ASTM Standard C150, Type II. The sand shall not exceed 50 percent by volume of the cement. The cement grout slurry shall not exceed 17.0 pounds per gallon and shall be free of lumps, to the satisfaction of the Consultant. Water used for preparing the cement grout shall be potable. Bentonite may be used as an additive, and must be in powder form and shall not exceed 4 percent by volume of the cement, or cement and sand. Water added for bentonite shall not exceed 1.3 gallons per 1.88 pounds of bentonite (2 percent by weight in cement). Accelerator additives, such as calcium chloride, shall not be used.

The neat cement shall consist of a cement slurry containing 5.2 to 6.0 gallons of water per 94-pound sack of Portland cement. The Portland cement shall conform to ASTM Standard C150, Type II. The cement grout slurry shall not exceed 15.6 lb/gal and shall be free of lumps, to the satisfaction of the Consultant. Water used for preparing the cement grout shall be potable. The neat cement grout slurry may contain pozzolanic material (fly ash) as an additive, which complies with ASTM Standard C618, and which shall not exceed 50 percent by volume of the cement. No non-pozzolanic aggregate, sand, or accelerator additives may be added, unless approved by the Consultant.

The Contractor must provide a cement mix design, the mix water source, and the specific constituents of the cement grout to the Consultant for approval prior to the installation of the cement grout.

The Contractor shall make provisions and allow for the Consultant to collect and preserve a representative sample of the cement grout. The Consultant shall weight the cement grout prior to installation, as an indicator of the cement-water ratio.

Cement grout that does not comply with the above requirements as determined by the Consultant will be rejected.

4.6 Surface Casing Installation

The surface casing shall be placed from 1 foot above the ground surface to at least 39 feet below the ground surface. The surface casing installation shall be conducted under the observation of the Consultant.

4.7 Cement Grout Seal Installation

The installation of the cement grout seal shall be conducted under the observation of the Consultant and placed in the annular space between the well casing and the wall of the surface borehole from the base of the surface casing to the ground surface. The Contractor shall be responsible to maintain an equalization of pressures to the extent necessary to prevent collapse of the surface casing during cement grout installation. The grout seal shall completely fill the annular space and form a uniform continuous seal between the surface casing and the wall of the borehole.

The surface casing shall be maintained centered in the borehole during and after cement grout installation. The Consultant must approve the method of grout installation. A minimum curing time for the surface casing cement grout seal is 12 hours, with the cement grout obtaining a compressive strength of at least 500 pounds per square inch (psi).

4.8 Submittals

A. The Contractor shall submit the required drill cuttings to the Consultant.
B. Prior to the installation of the surface casing, the Contractor shall submit a certified test report to the Consultant demonstrating compliance with the physical and chemical properties of the surface casing.
C. The cement grout must be approved by the Consultant prior to installation.
D. The Consultant must approve the method of the cement grout seal installation.

4.9 Measurements and Payments

Payment for all labor, equipment, and materials will be made on a linear foot basis.

*** End of Section ***

5.0 Pilot Borehole and Reamed Borehole Drilling

5.1 Equipment

The Contractor shall furnish and maintain in safe and efficient working condition all equipment necessary to perform the work. This shall include a drill rig capable of performing the specified operations to the specified depths and auxiliary equipment as specified or required to complete the work.

The Contractor shall submit a statement indicating the drilling equipment to be used. The drilling rig used for the installation of the production well shall have a mast capacity no less than 1½ times the string weight of the well casing and screen. Additonally, the well shall be installed without the use of a float plate. The drill pipe shall have a minimum 5½-inch inside diameter (ID).

The equipment supplied by the Contractor shall include, but not be limited to the following.

1. A wire line depth indicator capable of measuring depths equal to the total depth of the borehole, and equipped with a counter device which provides for a depth measurement accuracy of ± 1 foot
2. A water level sounder that provides for a depth measurement accuracy of ± 0.1 foot
3. Specified devices for measurement of the drilling mud viscosity and weight
4. An operating and accurate 3-degree inclinometer tool
5. An operating and accurate penetration rate indicator (Geolograph or approved equal)
6. An operating and accurate gauge that indicates the hook load (weight) of the drill string

The Contractor shall also maintain at the well, or have the ability to rapidly fabricate, commonly used fishing tools (such as overshots, wall hooks, junk baskets, etc.) to accommodate the event that lost tools in the borehole require fishing operations.

The drilling rig and auxiliary equipment shall be well maintained and shall meet the standards of the Occupational Safety and Health Administration (OSHA). Rig walkways and stairways shall be guarded with rails, and Contractor personnel shall use a safety harness at all times when ascending the rig mast. All high-pressure hoses shall be equipped with a safety chain to protect against the event of hose failure.

Prior to the start of drilling, the Contractor shall decontaminate the drill rig and downhole tools by steam cleaning. The method and extent of steam cleaning must be approved by the Consultant. The Contractor will be required to provide a letter of certification of the decontamination of the Contractor's equipment, prior to utilization. The Contractor may certify, in writing, the decontamination of critical (downhole) pieces of drilling equipment in lieu of actual steam cleaning, provided the downhole pieces of drilling equipment have not been in contact with any hazardous or toxic materials since the last decontamination. All necessary steam cleaning will be conducted at the Contractor's expense.

5.2 Plumbness and Alignment

The plumbness and alignment of the pilot borehole and reamed borehole shall allow for the installation of a well that complies with AWWA Standard A100, where the maximum allowable horizontal deviation (drift) of the completed well casing from vertical shall not exceed 10.66 inches per 100 feet of depth (for a 16-inch inside diameter casing).

A magnetic deviation survey or gyroscopic survey shall be conducted after the completion of the pilot borehole and reamed borehole drilling to determine compliance with the plumbness and alignment requirements.

If the boreholes fail to meet the plumbness and alignment requirements, as determined by the magnetic deviation survey or gyroscopic survey, the Contractor must correct the plumbness and alignment to the satisfaction and approval of the Consultant and the City. Plumbness and alignment correction costs will be borne by the Contractor.

5.3 Low Penetration

Low penetration is defined as a drilling rate of less than 4.0 feet per hour for a period of two (2) continuous hours, while at least 1,500 pounds per diameter inch is applied to the drill bit and the drill bit is in good working condition.

The Contractor shall notify the Consultant within one (1) hour of the following drilling condition: a penetration rate of less than 4.0 feet per hour for a period of two (2) continuous hours, while at least 1,500 pounds per diameter inch is applied to the drill bit.

At the request of the Consultant, the Contractor shall trip the drill string out of the hole for inspection of the drill bit by the Consultant.

If the Consultant 1) was notified as outlined above and 2) determines that there is no excessive bit wear then the Contractor shall be compensated on an hourly basis for low penetration conditions and for the time expended to remove and re-install the drill bit.

If the Consultant was not notified, as outlined above, or if the Consultant determines that there is excessive bit wear then this Section will not apply.

5.4 Pilot Borehole Drilling

After the completion of the surface casing, the pilot borehole shall be drilled to the depth noted on the plans and specifications and shall have a diameter no less than 16 inches and no greater than 17½ inches unless otherwise approved by the Consultant. The borehole shall be drilled in compliance with the drilling fluid requirements. During the drilling of the pilot borehole, all operations shall be conducted on a 24-hour per day, 7-day per week basis.

5.5 Reamed Borehole Drilling

After the completion of pilot borehole geophysical testing and zonal sampling operations, the pilot borehole shall be reamed to a diameter of 24-inches and to the depth noted in the plans and specifications, unless otherwise approved by the Consultant. The borehole shall be drilled in compliance with the drilling fluid requirements. During the drilling of the reamed borehole, all operations shall be conducted on a 24-hour per day, 7-day per week basis.

5.6 Inclinometer Survey

As an indication of the plumbness and alignment and not a determination of the plumbness and alignment, the Contractor shall conduct an inclinometer survey during the drilling of the pilot borehole using an inclinometer (TOTCO tool or approved equal) at 100-foot intervals. A 3-degree unit shall be used with the inclinometer. The inclinometer results shall be provided by the Contractor to the Consultant.

5.7 Drill Cuttings

During the drilling of the pilot borehole the Contractor shall collect and preserve a one (1) quart unwashed sample of the drill cuttings at ten (10) foot intervals for inspection by the Consultant.

The Contractor shall provide an acceptable means of sampling the drilled cuttings at the discharge pipe. A sump-type or baffle-type sample catching device shall be provided by the Contractor. Each cutting sample shall be carefully collected from the sampling point, and the sample catching device shall be cleaned of all cuttings after each sample is taken.

The sample shall be placed in a sample storage area on a plastic tarp at least 6 mils thick. The storage area and plastic tarp must allow samples to be maintained in sequence and unmixed with surface material or other samples until they have been examined and logged by the Consultant. During times of inclement weather the samples shall be covered with a plastic tarp at least 6 mils thick.

Each sample shall be laid out in descending order. A portion of each sample shall then be transferred into a 4½-inch by 6-inch cloth sack (Hubco or approved equivalent) and clearly labeled with the depth interval.

Prior to the start of drilling, the Contractor shall submit details of the proposed formation sampling method to the Consultant, including the specific sampling equipment sampling to be used (e.g., sample collection box). The sampling program and equipment must be approved by the Consultant.

5.8 Reports, Logs, and Records

The Contractor shall keep an accurate and legible daily log and record of all drilling, testing, and construction, describing all geologic material encountered during drilling, the depths at which changes in formation occur, and all difficulties or unusual conditions encountered.

5.9 Penetration Rate Log

During the drilling of the borehole, a time log shall be kept showing the actual penetration time required to drill each foot of the borehole. Every foot drilled shall be clearly marked on a geolograph strip chart. The types of bits used in each interval of the borehole shall be noted on this log and whether designed for soft, medium, or hard formations, including approximate weight on the bit, the rotation speed (RPM) of the bit, and any other information that may be requested by the Consultant. These logs shall be available for review by the Consultant throughout the drilling program, and a copy of the log shall be delivered to the Consultant daily.

5.10 Driller's Log

During the drilling of the borehole, the Contractor shall prepare a detailed driller's log in compliance with the requirements of the Arizona Department of Water Resources (ADWR). The log shall include the reference point for all depth measurements, a generalized description of each formation, the depth at which each formation is encountered, and the thickness of each formation. The lithologic log prepared by the Consultant will be made available to the Contractor to assist in the preparation of the driller's logs. A copy of the driller's log shall be submitted to the Consultant.

5.11 Submittals

A. Prior to the start of drilling, the Contractor shall provide a letter of certification of the decontamination of the Contractor's equipment, prior to utilization.
B. Formation Sampling Plan
C. Driller's Log
D. Penetration Rate Log
E. Statement of the drilling rig to be used and the mast capacity.
F. Inclinometer survey results

5.12 Measurements and Payments

A. Payment for the labor, equipment, and materials used to drill the pilot borehole and production borehole will be made on a linear foot basis.
B. Payments for low penetration conditions will be based on the Contractor's hourly drilling rate in lieu of the linear foot basis. The Owner will also provide compensation at a rate of cost plus ten (10) percent markup to the Contractor for all drilling bits used during Low Penetration Conditions. During Low Penetration Conditions, the Contractor will credit the prorated values of used drilling bits to the Owner.

*** End of Section ***

6.0 Pilot Borehole Geophysical Logging

6.1 General

Geophysical logging of the total depth of the pilot borehole shall be conducted at the completion of the pilot borehole drilling. The Contractor shall retain a geophysical logging company as a Subcontractor. The Consultant shall review and approve the Geophysical Logger prior to the start of logging. All geophysical logging activities shall be conducted under the observation of the Consultant and the City. The geophysical logging suite for the borehole shall include the following.

1. Spontaneous Potential Log (Electric Log)
2. Resistivity Log (Electric Log)
3. Acoustic Log (Sonic Log)
4. Natural Gamma Ray Log
5. Caliper Log
6. Focused Guard Log
7. Magnetic Deviation or Gyroscopic Log

The Contractor shall recondition the drilling fluid prior to the geophysical logging and shall keep the borehole full of drilling fluid at all times during geophysical logging, to stabilize the borehole and provide log integrity. The Contractor shall assist the geophysical logger in rigging of the geophysical survey equipment. The Contractor shall ensure that the logging tools can be run to the total depth of the pilot borehole without interference by obstructions or tight sections in the borehole.

At the request of the Consultant, the Geophysical Logger shall conduct repeat sections of geophysical logs in intervals of the borehole selected by the Consultant. The repeat logging intervals will not exceed 50 feet.

The magnetic deviation log or gyroscopic survey shall be used to determine the conformance of the pilot borehole to the plumbness and alignment requirements. The geophysical logging Subcontractor shall prepare a written plumbness and alignment report. The report shall include numerical values of the well deviation, and also graphical diagrams of the well alignment, from both a profile perspective (both Northing and Easting views), and a vertical perspective. The quality and clarity of the gyroscopic logs must be approved by the Consultant.

6.2 Submittals

A. The Contractor shall submit to the Consultant for review and approval the geophysical logging Subcontractor.
B. The Geophysical logger shall provide five (5) field copies of each geophysical log survey to the Consultant and one (1) field copy to the City upon the completion of logging. Within 10 days after completion of logging, 12 final copies of the geophysical logs shall be provided to the Consultant, as well as an electronic original of the logging data in Windows Metafile and PDF format.

C. The Geophysical Logging Subcontractor shall within 48 hours after completing the gyroscopic survey provide the Consultant with 12 final copies of the gyroscopic survey, plumbness and alignment report; one (1) electronic copy of the gyroscopic survey in a Windows Metafile and a PDF format, and one (1) electronic copy of the plumbness and alignment report in a PDF format.

6.3 Measurements and Payments

Payment for all labor, equipment, and materials will be made on a lump sum basis.

*** End of Section ***

7.0 Pilot Borehole Zonal Sampling and Testing

7.1 General

After the completion of the pilot borehole geophysical logging, the Contractor shall conduct depth specific groundwater sampling, as directed by the Consultant. The results of this testing will aid in the final design of the well. Zonal samples will be collected at locations specified by the Consultant and approved by the City, within the pilot borehole. The Consultant may add or omit zonal samples based on subsurface conditions encountered. The City shall review and approve the depths and number of zonal samples.

For bidding purposes only, it is anticipated to collect seven (7) zonal samples in a 1,500 foot well.

7.2 Equipment

For airlifting purposes, the Contractor shall provide a compressor capable of supplying a minimum of 750 cubic feet per minute and 350 pounds per square inch.

For sample collection purposes, the Contractor shall provide a pump capable of providing a discharge of no less than 50 gallons per minute with the pump set at a depth of 10-feet above the bottom of the borehole.

Pup joints of drill pipe in lengths of 5 and 10 feet (at least one of each) to be available for use during zonal sampling operations. The well screen and drill pipe must have a minimum 4-inch inside diameter and be capable of the installation of a submersible pump and sounding tube.

7.3 Pea Gravel Material

The pea gravel used for zonal sampling shall be a clean durable well-rounded siliceous pea gravel that is smooth and uniform. Samples of the pea gravel shall be provided to the Consultant for approval no less than 24 hours prior to installation.

7.4 Bentonite Seal Material

The bentonite seal material shall consist of sodium bentonite pellets or chips. The bentonite seal material shall contain no hazardous materials or gypsum. Samples of the bentonite material shall be provided to the Consultant for approval no less than 24 hours prior to installation.

7.5 Installation

The sample zone shall consist of a 5 foot bottom bentonite seal, a 30 foot envelope of pea gravel surrounding the screen and casing, and capped with a second 5 foot bentonite seal. The pea gravel and bentonite shall be installed through a tremie pipe, unless otherwise approved by the Consultant.

The well screen shall be approximately 20 feet in length and shall be placed approximately five (5) feet from the top and bottom of the bentonite seals, or as directed by the Consultant. The Contractor shall use pup joints when necessary to set the well screen at the required depth.

The materials and well screen shall be installed to the appropriate depth and measured with a wireline. After the drill string, eductor pipe, gravel pack, and bentonite seals are installed, the interval shall be developed by airlifting and pumping.

7.6 Airlifting

The Contractor shall airlift from the sample zone using an air line inside the drill string. It is anticipated that 10 hours of airlifting will be required for each sample interval. Airlifting of water from the zone will continue to the satisfaction of the Consultant. The discharge from the zone need not be free of sand grains, but must be reasonably clear to the satisfaction of the Consultant.

The specific zonal airlifting procedure and the point of discharge for purged water must be approved by the Consultant.

7.7 Pumping

After the airlifting of the zone, the Contractor shall install a submersible pump and a 1-inch sounding tube. During the pumping of water from each zonal sample interval, the Contractor shall operate the pump and shall assist the Consultant with the collection of water levels and zonal groundwater samples for testing and analysis by the Consultant. It is anticipated that approximately 2 hours will be need to complete the work.

7.8 Submittals

The Contractor shall submit to the Consultant for review and approval the bentonite and pea gravel materials.

7.9 Measurements and Payments

A. Payments for all labor, equipment, and materials will be made on a per zonal sample basis.
B. Payments for all standby time will be made on an hourly basis.

*** End of Section ***

8.0 Production Borehole Geophysical Logging

8.1 General

After the completion of the borehole reaming, the Contractor shall conduct the following geophysical logs of the borehole.

1. Magnetic Deviation Log or Gyroscopic Log
2. Caliper Log

The surveys shall be conducted under the observation of the Consultant and the Consultant shall review and approve the geophysical logging Subcontractor prior to the start of logging.

The Contractor shall keep the reamed borehole full of drilling fluid at all times during geophysical logging, to stabilize the borehole and provide log integrity. The Contractor shall assist the geophysical logger in rigging of the geophysical survey equipment. The Contractor shall ensure that the logging tools can be run to the total depth of the production borehole without interference by obstructions or tight sections in the borehole.

The magnetic deviation log or gyroscopic survey tool shall be centralized in the well and at the request of the Consultant, the geophysical logging Subcontractor shall conduct repeat sections of geophysical logs in intervals of the borehole selected by the Consultant. The repeat logging intervals will not exceed 50 feet.

The magnetic deviation log or gyroscopic survey shall be used to support a determination by the Consultant, of the conformance of the reamed borehole to the plumbness and alignment requirements. The geophysical logging Subcontractor shall prepare a written plumbness and alignment report. The report shall include numerical values of the well deviation, and also graphical diagrams of the well alignment, from both a profile perspective (both Northing and Easting views), and a vertical perspective. The quality and clarity of the gyroscopic logs must be approved by the Consultant.

8.2 Submittals

A. The Contractor shall submit to the Consultant for review and approval the Geophysical Logger.
B. The Geophysical Logging Subcontractor shall provide five (5) field copies of the geophysical logs to the Consultant and one (1) field copy to the City upon the completion of logging. Within 10 day after completion of logging, 12 final copies of the geophysical logs shall be provided to the Consultant, as well as an electronic original of the logging data in Windows Metafile (*.wmf) format and PDF format.
C. The Geophysical Logging Subcontractor shall within 48 hours after completing the gyroscopic survey provide the Consultant with 12 final copies of the gyroscopic survey, plumbness and alignment report; one (1) electronic copy of the gyroscopic survey in a Windows Metafile and a PDF format, and one (1) electronic copy of the plumbness and alignment report in a PDF format.

8.3 Measurements and Payments

Payment for all labor, equipment, and materials will be made on a lump sum basis.

*** End of Section ***

9.0 Production Well Materials and Installation

9.1 General

The well casing, well screen, and annular materials for the well must be approved by the Consultant prior to their installation.

The Consultant and the City will make a final determination of the well screen slot size and the final length and depths of the well casing and well screen will be determined by the Consultant based on analysis of the geophysical logging data and zonal sampling data from the pilot borehole.

The Contractor shall immediately commence well installation operations after the completion of the production well caliper log and gyroscopic survey.

9.2 Well Casing Material

The sump plate, sump casing, well casing, stickup casing, and cover plate shall be new and shall meet the requirements listed below.

Description	Steel	Outside Diameter	Wall Thickness	Casing Section Length
Cover Plate	HSLA, ASTM specification A606 Type 4, ASTM A139 Grade B	----	0.312-inch	----
Stickup Casing		$16^5/_8$-inch		4-feet
Well Casing		$16^5/_8$-inch		40-feet
Sump Casing		$16^5/_8$-inch		20-feet
Sump Plate		----		----

The casing sections shall contain one spiral seam along the casing axis, and shall contain no more than one circumferential seam per 10 linear feet, unless otherwise approved by the Consultant and City. The casing shall be marked in accordance with these standards. The well casing shall be factory-assembled.

The Contractor shall obtain from the well casing manufacturer, the tensile strength (pounds), collapse strength (psi), weight (pounds per linear foot), and maximum recommended hang weight (pounds) of the casing. This information shall be provided to the Consultant prior to delivery of the casing to the site.

Prior to casing installation, the Contractor shall submit certified test reports to the Consultant to demonstrate compliance with the physical and chemical properties of the well casing that are specified herein.

9.3 Well Screen Material

The well screen for the public supply well shall be new, high strength low alloy steel (HSLA) Full Flo Louvered screen. The well screen shall have a $16^{5}/_{8}$-inch nominal diameter and 0.312-inch wall thickness, with horizontal louvered openings and manufactured in 40-foot lengths.

The horizontal louvered openings shall be factory-installed in the well screen with an approximate 3-inch slot length, in rows that are spaced approximately 1 inch apart in the vertical direction. The openings in the screen shall be machine made, horizontal to the axis of the casing, and of a louver form with the aperture facing downward.

The Contractor shall obtain from the well screen manufacturer, the tensile strength (pounds), collapse strength (psi), weight (pounds per linear foot), and maximum recommended hang weight (pounds) of the screen. This information shall be provided to the Consultant prior to delivery of the well screen to the site.

Prior to well screen installation, the Contractor shall submit certified test reports to the Consultant to demonstrate compliance with the above requirements.

9.4 Welding Collars and Centralizers

The welding collars and centralizers shall be new and shall meet the requirements listed below.

Description	Steel	Wall Thickness	Length
Welding Collars	HSLA ASTM specification A606 Type 4	0.312-inch	5-inches
Centralizers		----	----

The welding collars shall fit the outside diameter of the well casing within 0.0625-inch diametrical clearance. The welding collars shall be delivered to well site connected to the casing sections at one end with factory-welded connections. The inside edge of the welding collars shall be ground or sufficiently scarified to remove sharp edges or burrs. Three alignment holes shall be provided in each welding collar (spaced at 120°), to ensure proper abutment of the casing sections. The alignment holes shall be no larger than 1 inch in diameter, and shall be completely filled with fillet welding.

9.5 Filter Pack Material

The filter pack shall be Colorado Silica Sand or approved equal, consisting of clean, well-rounded grains that are smooth and uniform. The filter pack shall be siliceous with a limit of 2 percent, by weight, calcareous material. The filter pack material shall be obtained from a source that has been approved by the Consultant, and shall consist of well-rounded particles with an average density of not less than 2.5 grams per cubic centimeter, and have a uniformity coefficient no greater than 1.5. Not more than 1 percent, by weight, of the material shall have a density of 2.25 grams per cubic centimeter or less. The filter pack shall contain no more than 2 percent by weight, thin, flat, or elongated pieces (pieces in which the largest dimension exceeds three times the smallest dimension) determined by hand-packing. The filter pack material shall be free of

shale, mica, clay, dirt, loam, organic impurities of any kind, and shall not contain iron or manganese in a form or quantity that will adversely affect the water quality.

Samples of the filter pack sand and a sieve analysis (percent retained through U.S. standard sieve numbers 4, 8, 10, 16, 30, 40, 50, 100, and 200) of the filter pack material shall be submitted to the Consultant for approval, a minimum of 3 days prior to delivery of the filter pack to the well site. The filter pack material shall be contained in a temporary storage area at the well sites in such a manner as to prevent contamination. The filter pack material shall be bagged in approximately 3,000-pound (about one cubic yard) "super sacks". Each bag must be labeled with its actual weight. Any filter pack material delivered unbagged or unlabeled will be rejected.

9.6 Disinfectant Material

A liquid sodium hypochlorite solution or granular calcium hypochlorite in accordance with NSF 61 and AWWA Standard C654 for disinfection of wells.

9.7 Pea Gravel Material

The pea gravel shall be clean durable well-rounded siliceous pea gravel that is smooth and uniform. The pea gravel shall be obtained from a source that has been approved by the Consultant. The pea gravel shall be free of sand, silt, clay, shale, mica, dirt, loam, organic matter or deleterious materials of any kind, and shall not contain any materials in a form or quantity that will adversely affect the water quality.

Samples of the pea gravel shall be submitted to the Consultant for approval, a minimum of 3 days prior to delivery of the pea gravel to the well site. The gravel pack material shall be contained in a temporary storage area at the well site in such a manner as to prevent contamination.

9.8 Bentonite Seal Material

The bentonite seal material shall consist of sodium bentonite pellets or chips. The bentonite seal material shall contain no hazardous materials or gypsum. Samples of the bentonite material for the well shall be provided to the Consultant for approval no less than 24 hours prior to installation.

9.9 Sand Cement Grout Seal Material

The sand cement grout seal material shall consist of cement slurry containing 5.2 to 6.0 gallons of water per 94-pound sack of Portland cement. The Portland cement shall conform to ASTM Standard C150, Type II. The sand shall not exceed 50 percent by volume of the cement. The cement grout slurry shall not exceed 17.0 pounds per gallon and shall be free of lumps, to the satisfaction of the Consultant. Water used for preparing the cement grout shall be potable. Bentonite may be used as an additive, and must be in powder form and shall not exceed 4 percent by volume of the cement, or cement and sand. Water added for bentonite shall not exceed 1.3 gallons per 1.88 pounds of bentonite (2 percent by weight in cement). Accelerator additives, such as calcium chloride, shall not be used.

The Contractor must provide a cement mix design, the mix water source, and the specific constituents of the cement grout to the Consultant for approval prior to the installation of the cement grout.

The Contractor shall make provisions and allow for the Consultant to collect and preserve a representative sample of the cement grout. The Consultant shall weight the cement grout prior to installation, as an indicator of the cement-water ratio.

Cement grout that does not comply with the above requirements as determined by the Consultant will be rejected.

9.10 Neat Cement Grout Seal Material

The neat cement grout seal material shall consist of a cement slurry containing 5.2 to 6.0 gallons of water per 94-pound sack of Portland cement. The Portland cement shall conform to ASTM Standard C150, Type II. The cement grout slurry shall not exceed 15.6 lb/gal and shall be free of lumps, to the satisfaction of the Consultant. Water used for preparing the cement grout shall be potable.

The cement grout slurry may contain pozzolanic material (fly ash) as an additive, which complies with ASTM Standard C618, and which shall not exceed 50 percent by volume of the cement. No non-pozzolanic aggregate, sand, or accelerator additives may be added, unless approved by the Consultant.

The Contractor must provide a cement mix design, the mix water source, and the specific constituents of the cement grout to the Consultant for approval prior to the installation of the cement grout.

The Contractor shall make provisions and allow for the Consultant to collect and preserve a representative sample of the cement grout. The Consultant shall weight the cement grout prior to installation, as an indicator of the cement-water ratio.

Cement grout that does not comply with the above requirements as determined by the Consultant will be rejected.

9.11 Well Casing and Screen Installation

During the installation of the well casing and screen the borehole shall be kept full of drilling fluid and be free from any obstructions detrimental to completing the casing installation. The well casing shall be hung in tension throughout the installation of the annular materials. The well casing shall be set centered in the hole so as not to interfere in any way with the installation of the annular materials. The Contractor will be required to work continuously, on a 24-hour per day, 7-day week basis, while installing and completing the well.

The well casing and well screen shall be set by the Contractor at the depth intervals specified by the Consultant and approved by the City. The centralizers shall be secured to the well casing and screen at intervals of not greater than 40 feet.

Joints in the well casing and well screen shall be field welded in accordance with applicable provisions of the AWWA Standard C206 for welded joints. The ends of each casing section shall not vary more than 0.010 inch at any point from a true plane at right angles to the axis of the casing. A welding sequence will be followed that will avoid excessive distortion, voids, and/or air pockets. All well casing joints or overlaps shall be made watertight to prevent the degradation of the water supply by the migration of poor quality water. All welding shall be performed by an experienced welder.

If the casing or screen sections are butt-welded without the use of welding rings, the ends of the casing lengths shall be ground, or sufficiently scarified, to remove sharp edges or burrs. Each casing and screen end shall be beveled at one end to allow complete penetration of the welds.

If the casing or screen sections are joined with welding rings, the ends of the casing lengths shall be ground, or sufficiently scarified, to remove sharp edges or burrs. One end of each casing section shall be furnished with a welding collar.

Prior to installation of the well casing and screen, the Contractor shall submit an installation plan to the Consultant for review and approval. The plan shall include the proposed method to install the well casing and screen.

9.12 Filter Pack and Disinfectant Installation

Prior to the installation of the filter pack and disinfectant, the Contractor shall recondition the drilling fluid. The filter pack shall be placed to completely fill the annulus between the reamed borehole and the well casing.

The drilling fluid shall be maintained throughout the full depth of the well to the land surface and the well casing and screen shall be maintained in tension, until the placement of the filter pack has been completed to the specified level. During the time of placement, fluid circulation shall be maintained through a Consultant approved swab block located no less than 40-feet below the fill depth of the filter pack. The swab block shall be periodically reciprocated to remove fine-grained material, prevent bridging, and aid in settling the filter pack in the borehole. Care shall be taken to avoid bridging during installation of the filter pack.

The filter pack and disinfectant shall be installed with potable water by use of a tremie pipe. At no time shall the bottom of the tremie pipe be located at a distance of greater than 30 feet above the interval being filled during filter pack placement. The level of the filter pack shall be measured periodically during placement with a wireline sounder, as required by the Consultant. Placement of the filter pack and disinfectant will be continuous, except when additional precautions are necessary to prevent bridging, or while measurement of the filter pack level is being conducted.

The quantity of filter pack material placed in the annulus shall not be less than that of the calculated volume as determined by the production borehole caliper survey. Upon completion of the filter pack placement, excess filter pack material will be judged an indication of voids in the sand envelope and corrective measures shall be undertaken at the Contractor's expense. The specific method of filter pack placement must be approved by the Consultant.

The filter pack shall be disinfected using a Consultant approved disinfectant that provides a chlorine residual of not less than 50 mg/l and no greater than 100 mg/l in the entire volume of the fluid with in the well. The Contractor is responsible for the uniform application of the disinfecting agent throughout the filter pack interval, without relying on subsequent mechanical surging action for dispersing the disinfectant. The specific method used to disinfect the filter pack must be approved by the Consultant.

Prior to installation of the filter pack and disinfectant, the Contractor shall submit an installation plan to the Consultant for review and approval. The plan shall include the proposed method to install the filter pack and disinfectant.

9.13 Bentonite Seal Installation

A bentonite seal shall be installed after the installation of the filter pack. The bentonite seal shall be placed to completely fill the annular space between the well casing and the wall of the borehole. The bentonite seal shall be installed simultaneous with the reverse circulation of drilling fluid down the annulus, until such time that the annulus has been sealed and circulation can no longer be maintained.

Prior to installation of the bentonite seal, the Contractor shall submit an installation plan to the Consultant for review and approval. The plan shall include the method to install the bentonite seal.

9.14 Neat Cement Grout Seal Installation

The neat cement grout seal shall be installed after the installation of the bentonite seal. The cement grout seal shall be placed to completely fill the annular space between the well casing and the wall of the borehole. The well casing shall be hung in tension throughout the grouting operation, until the cement grout has cured sufficiently.

The cement grout shall be placed in one continuous operation from the bottom to the top of the interval to be grouted, forming a continuous seal. The cement grout shall be passed through a ½-inch slotted bar strainer to remove any unmixed lumps and installed by pumping through a tremie pipe. The discharge end of the tremie pipe shall be continuously submerged in the grout until the zone to be grouted is completely filled.

The Contractor is responsible to maintain cement slurry hydraulic pressures and pumping pressures that will not reach excessive levels and cause collapse of the well casing during the installation of the cement grout. The minimum curing time for the cement grout shall be 12 hours or the cement grout obtaining a minimum compressive strength of 500 psi.

Prior to installation of the cement grout seal, the Contractor shall submit an installation plan to the Consultant for review and approval. The plan shall include the proposed method to install the neat cement grout seal.

9.15 Formation Stabilizer Installation

The formation stabilizer consists of alternating 100 foot thick layers of pea gravel and 5 foot thick layers of bentonite.

Prior to installation of the formation stabilizer, the Contractor shall submit an installation plan to the Consultant for review and approval. The plan shall include the proposed method to install the formation stabilizer.

9.16 Surface Casing Cement Grout Seal Installation

The sand or neat cement grout seal shall be installed after the installation of the formation stabilizer. The cement grout seal shall be placed to completely fill the annular space between the well casing and the wall of the borehole. The well casing shall be hung in tension throughout the grouting operation, until the cement grout has cured sufficiently.

The cement grout shall be placed in one continuous operation from the bottom to the top of the interval to be grouted, forming a continuous seal. The cement grout shall be passed through a ½-inch slotted bar strainer to remove any unmixed lumps and installed by pumping through a tremie pipe. The discharge end of the tremie pipe shall be continuously submerged in the grout until the zone to be grouted is completely filled.

The Contractor is responsible to maintain cement slurry hydraulic pressures and pumping pressures that will not reach excessive levels and cause collapse of the well casing during the installation of the cement grout. The minimum curing time for the cement grout shall be 12 hours or the cement grout obtaining a minimum compressive strength of 500 psi.

Prior to installation of the sand cement grout seal, the Contractor shall submit an installation plan to the Consultant for review and approval. The plan shall include the proposed method to install the sand cement grout seal.

9.17 Cover Plate and Access Port Installation

After completion of all testing and surveys, the Contractor shall install the cover plate and access port. The covering plate shall be secured to the top of the well with a watertight welded seam. Additionally, the covering plates will be equipped with a minimum 1-inch diameter access port with a watertight threaded cap, to allow for the measurement of water levels.

9.18 Submittals

A. The Contractor shall obtain from the well casing and screen manufacturer, the tensile strength (pounds), collapse strength (psi), weight (pounds per linear foot), and maximum recommended hang weight (pounds). This information shall be provided to the Consultant prior to delivery of the well casing and screen to the site.
B. Prior to the installation of the well casing and screen, the Contractor shall submit certified test reports to the Consultant to demonstrate compliance with the requirements of this section.

C. An affidavit of compliance with the welding provisions of this section shall be provided to the Consultant prior to the acceptance the well. The affidavit of compliance will certify that all welding was performed in accordance with all applicable requirements.
D. Prior to the installation of the annular materials the Contractor shall submit an installation plan to the Consultant for review and approval.

9.19 Measurements and Payments

A. Payment for the well casing, sump casing, sump plate, centralizers, cover plate, and access port materials shall be made on a linear foot basis for the actual quantities installed.
B. Payment for the well screen and centralizer materials shall be made on a liner foot basis for the actual quantities installed.
C. Payments for the annular materials will be made on a per ton, linear foot, cubic yard, or cubic foot basis for the actual quantities installed.
D. Payments for all labor and equipment to install the well casing, screen, and annular materials shall be made on a liner foot basis.

*** End of Section ***

10.0 Production Well Development

10.1 General

The Contractor shall develop the well after installation of the well casing, screen, and annual materials.

10.2 Equipment

The Contractor shall furnish and maintain in safe and efficient working condition all equipment necessary to perform and complete the well development. The equipment supplied by the Contractor shall include, but not limited to, the following:

A. Test motor,
B. Pump,
C. Column pipe,
D. Discharge pipe,
E. Flow meter and totalizer,
F. Air compressor,
G. Swabbing tool,
H. A wire line capable of measuring the entire length of the well that provides for a depth measurement accuracy of ± 1 foot,
I. Generator,
J. Rossum Sand Sampler, and
K. all other related equipment, materials, and labor necessary to conduct and complete the well development.

For swabbing and airlifting, the air compressor shall be capable of supplying a minimum of 750 cubic feet per minute and 350 pounds per square inch and the airline shall have a minimum 1¼-inch ID in order to accommodate adequate airflow.

The equipment used for the addition of chemical additives must be approved by the Consultant.

Contractor shall also provide and install a Rossum Sand Sampler in accordance with AWWA A100 for measurement of sand production during the pumping well development.

The Contractor shall furnish pumping equipment capable of developing the well during pumping and surging operations. The pump shall be capable of pumping a minimum from 500 to 2,000 gpm with a total dynamic head of 800 feet. The pumping equipment shall be complete with an ample power source and shall be capable of being operated throughout the entire pumping and surging operations.

The discharge pipe shall be equipped with a Consultant approved spigot or valve for water sample collection.

10.3 Dispersant Materials

At the Consultant's discretion and approval, a non-phosphoric dispersant that will not promote bacterial growth may be added to the well in accordance with the manufacturer's recommendations, during development operations to enhance dispersement of fine-grained particles for removal during development operations. For example purposes only this could be Johnson Screen product NW-220 or Aqua-Clear MSR. The Contractor shall submit to the Consultant for review and approval any dispersant to be used in the well. The Contractor shall provide the Consultant with an MSDS and information related to NSF approval for all chemical additives used for well development at least 3 days prior to their use. The Consultant must approve the specific type and placement method of any chemical additives, if needed.

The specific methods, chemical additives, and equipment used for well development must be approved by the Consultant prior to commencement of development operations.

10.4 Development

The well shall first be developed using swabbing and airlifting followed by pumping and surging. The swabbing and airlifting shall include an initial quick downward swab followed by swabbing and airlifting starting at the bottom of the well screen and shall proceed upward to the top of the well screen, at a rate of no less than 7.5 minutes per foot of screen, unless otherwise directed by the Consultant. Additionally, a discharge rate of no less than 50 gpm must be maintained. Each section of the well shall be developed until that section is reasonably clear and free of sediment, as determined by the Consultant.

After swabbing and airlift development and prior to pump and surge, the top of the fill material in the well shall be sounded. If substantial fill material is present in the well, as determined by the Consultant, then the fill material shall be removed from the well prior to pumping and surging.

The specific pump-and-surge development method must be approved by the Consultant. The pump-and-surge development program is anticipated to have a 12-hour duration, with pumping rates ranging from 500 to 2,000 gpm. The well shall be pumped and surged until the discharge is reasonably clear and free of sediment, as determined by the Consultant. After pumping and surging has been completed, the top of the fill material in the well shall be sounded. If substantial fill material is present in the well, as determined by the Consultant, then the fill material shall be removed from the well prior to aquifer testing.

Water produced during the well development shall be contained on site. Any offsite discharges shall be approved by the Consultant prior to discharge. Re-use of the discharge water will not be allowed.

10.5 Submittals

A. The specific methods, chemical additives, and equipment used for well development must be approved by the Consultant prior to commencement of development operations.
B. The Consultant shall review and approve the swab and airlift development method and swab tool prior to swab and airlift operations.

C. The Consultant shall review and approve the pump and surge development method prior to pump and surge operations.

10.6 Measurements and Payment

Payment for all labor, equipment, and materials will be made on an hourly and lump sum basis.

*** End of Section ***

11.0 Production Well Aquifer Testing

11.1 General

The Contractor shall conduct aquifer testing in the production well after the completion of the development of the production well.

11.2 Equipment

The Contractor shall furnish and maintain in safe and efficient working condition all equipment necessary to perform the aquifer testing. The equipment supplied by the Contractor shall include, but not limited to, the following:

1. Test motor,
2. Pump,
3. Column pipe,
4. Discharge pipe,
5. Flow meter and totalizer,
6. Calibrated orifice and manometer,
7. A water level sounder that provides for a depth measurement accuracy of ± 0.1 foot,
8. Sounding tube,
9. Generator,
10. Rossum Sand Sampler, and
11. all other related equipment, materials, and labor necessary to conduct the aquifer testing.

The Contractor shall furnish pumping equipment capable of a variable discharge rates up to 2,000 gpm, with a pumping lift (not including pipe friction losses) of 800 feet bless. The pumping equipment shall include satisfactory throttling devices or valves such that the discharge can be adjusted to various rates. The test pump setting shall be determined by the Consultant, based on the final well design. The pumping units shall be complete with an ample power source and shall be capable of being operated without interruption for a period of 24 hours.

The Contractor shall also furnish and install a 1-inch inside diameter sounding tube that extends from the land surface to the top of the pump bowls to facilitate the measurement of water levels using an electric sounder or a Consultant provided pressure transducer. The bottom of the sounding tubes shall be capped, with perforations in the lower 20 feet. The sounding tube shall permit the free and unobstructed passage of the electric sounder and pressure transducer from the wellhead to the bottom of the sounding tube such that accurate water levels measurements can be obtained.

The discharge pipe shall be equipped with a Consultant approved spigot or valve for water sample collection.

The Contractor shall also furnish equipment for measurement of the sand production during pumping. The sand measurement device shall be a Rossum Sand Sampler in accordance with AWWA Standard A100.

The Contractor shall provide and install an approved in-line propeller or magnetic flow meter capable of accurately measuring the amount of water being discharged from the well. The in-line flow meter shall be located in a straight portion of the discharge pipe without any bends, valves, or other obstructions that may interfere with the operation and/or accuracy of the meter for a distance of no less than 10 pipe diameters upstream, and for a distance of no less than 5 pipe diameters downstream (unless otherwise recommended by the manufacturer of the meter). At all times during pumping, the discharge pipe shall be oriented in such a manner as to ensure that the pipe remains full of water at the location of the flow meter. Prior to the performance of the pumping activities, the Contractor shall provide written certification that flow meters and totalizer are calibrated to within the accuracy constraints required by this specification. Additionally, the Contractor shall provide and install a calibrated orifice and manometer in the discharge pipe.

The equipment shall not be removed from the well until after the completion of the recovery test. The Consultant must approve the test pump, motor, metering equipment, and accessories.

11.3 Discharge

The Contractor shall operate the test pump at the discharge rates that have been directed by the Consultant and approved by the City. Discharge from the pump shall be controlled by a gate valve and/or engine throttle. The discharge shall be controlled and maintained at the specified rate for the entire test duration with an accuracy of plus-or-minus 5 percent.

The discharge water from the well shall be directed to a point of discharge that has been approved by the Consultant. The discharge piping shall be watertight and capable of conveying the specified flow rates for the specified pumping periods. The Contractor is responsible for providing adequate piping for the actual distances to the discharge points. The Contractor is responsible for coordination of any required permits, traffic control, and other considerations that may be required to address potential flooding or pipeline crossings of roadways that result from the discharged water.

11.4 Data Recording

The Contractor shall obtain and record the water level measurement, discharge rate, and total discharge in half-hour intervals throughout the duration of the aquifer testing, or as directed by the Consultant.

11.5 Step Test

The step test shall consist of a 10-hour pumping duration. The Contractor shall monitor and adjust the discharge rate as directed by the Consultant. During the step test the Consultant shall collect water levels, discharge rates, total discharge, and water samples for testing and analysis. The Consultant reserves the right to extend the test duration.

11.6 Constant Rate Test

The constant rate shall consist of a 24-hour pumping duration. The Consultant reserves the right to extend or shorten the test duration.

The Contractor shall obtain and record water level measurements, discharge rate, and total discharge in half-hour intervals throughout the duration of the constant rate test, or as directed by the Consultant. The Contractor shall not shut down the pump until the Consultant is on site. The Consultant shall collect water samples for testing and analysis.

11.7 Recovery Test

The recovery test shall immediately follow the constant rate test and shall last for a duration of 24-hours or 90% recovery, which ever is the greater amount of time. The Consultant reserves the right to extend the test duration.

The Consultant shall record water level measurements throughout the duration of the recovery test.

11.8 Sand Production

The amount of sand produced in the first ten (10) minutes after the start of the constant rate test shall not exceed 1 part per million (ppm) by volume.

If the well fails to meet the above requirements due to negligence on the part of the Contractor, the Contractor must correct the sand production to the satisfaction and approval of the Consultant and the City. To correct the sand production the Contractor may repeat the production well development process. Sand production correction costs will be borne by the Contractor and at no cost to the Owner.

During the step test and constant rate test the Consultant shall measure and record the amount of sand produced by the well using the Contractor provided Rossum Sand Sampler in accordance with AWWA Standard A100.

11.9 Submittals

A. The Contractor shall submit to the Consultant for review and approval the test pump, motor, flow meter and totalizer, and accessories prior to aquifer testing.
B. Prior to aquifer testing, the Contractor shall provide a written certification that the flow meter and totalizer are calibrated to the manufactures specifications.

11.10 Measurements and Payments

A. Payment for all labor, equipment, and materials will be made on a lump sum and hourly basis.
B. Sand production correction costs shall be borne by the Contractor at no cost to the Owner.

*** End of Section ***

12.0 Production Well Spinner Survey

12.1 General

After completion of the aquifer testing, the Contractor shall conduct a spinner survey followed by depth-specific water sampling of the well. The spinner survey and water sampling shall be conducted under the observation of the Consultant and the City. Prior to the spinner survey the Contractor shall submit to the Consultant for review and approval the Geophysical Logger. The quality of the spinner survey and zonal samples must be acceptable to the Consultant and the City.

It is anticipated that the spinner survey and sample collection will take 7-hours. The Contractor shall obtain and record water level measurements, discharge rate, and total discharge in half-hour intervals throughout the duration of the spinner survey, or as directed by the Consultant. The Consultant reserves the right to extend or shorten the test duration.

12.2 Equipment

The Contractor shall furnish and maintain in safe and efficient working condition all equipment necessary to perform the aquifer testing. The equipment supplied by the Contractor shall include, but not limited to, the following.

1. Test motor
2. Pump
3. Column pipe
4. Discharge pipe
5. Flow meter and totalizer
6. A water level sounder that provides for a depth measurement accuracy of ± 0.1 foot
7. Sounding tube
8. Access Tube
9. Generator
10. Rossum Sand Sampler
11. All other related equipment, materials, and labor necessary to conduct the aquifer testing

The Contractor shall furnish pumping equipment capable of pumping at a rate of no less than 1,500 gpm, with a pumping lift (not including pipe friction losses) of 800 feet bls. The pumping equipment shall include satisfactory throttling devices or valves such that the discharge can be adjusted to various rates. The test pump setting shall be determined by the Consultant, based on the final well design. The pumping units shall be complete with an ample power source and shall be capable of being operated without interruption for a period of 24 hours.

To accommodate the spinner and water sampling tool, the Contractor shall furnish and install a 3-inch inside diameter open-ended access tube that extends from the land surface to a minimum of 20 feet below the base of the pump equipment. The access tube must allow the free installation, operation, and removal of the spinner-logging tool and water sampling tool, while the pump is in operation and the Contractor shall ensure that the logging tools can be run to the total depth of the well without interference by obstructions or tight sections in the access tube or well.

The Contractor shall also furnish and install a 1½-inch inside diameter sounding tube that extends from the land surface to the top of the pump bowls to facilitate the measurement of water levels during the spinner flow meter surveys. The bottom of the sounding tubes shall be capped, with perforations in the lower 10 feet.

The Contractor shall provide an approved inline flow meter and manometer in the discharge pipe to measure the rate and total amount of water being discharged during the test.

The discharge pipe shall be equipped with a Consultant approved spigot or valve for water sample collection.

The Contractor shall also furnish equipment for measurement of the sand production during pumping. The sand measurement device shall be a Rossum Sand Sampler in accordance with AWWA Standard A100.

The pump equipment, spinner access tube, and sounding tube shall not be removed from the well until after the completion of the testing. The Consultant must approve the test pump, motor, metering equipment, and accessories.

The Contractor shall maintain the flow rate(s) requested by the Consultant during the course of spinner logging and depth-specific water sampling, and the Contractor shall also assist the spinner logging company with rigging of the logging equipment, as necessary.

12.3 Discharge

The Contractor shall operate the test pump at the discharge rates that have been directed by the Consultant. Discharge from the pump shall be controlled by a gate valve and/or engine throttle. The discharge shall be controlled and maintained at the specified rate for the entire test duration with an accuracy of plus-or-minus 5 percent.

The discharge water from the well shall be directed to a point of discharge that has been approved by the Consultant. The discharge piping shall be watertight and capable of conveying the specified flow rates for the specified pumping periods. The Contractor is responsible for providing adequate piping for the actual distances to the discharge points. The Contractor is responsible for coordination of any required permits, traffic control, and other considerations that may be required to address potential flooding or pipeline crossings of roadways that result from the discharged water.

12.4 Spinner Logging

The spinner survey shall include three (3) downward logging runs at different line speeds. The spinner logging activities shall be conducted under the observation of the Consultant and the City.

12.5 Water Sampling

The logging Subcontractor will also be required to collect of a minimum of three (3) zonal water samples from depth intervals determined by the Consultant and approved by the City. The collection of zonal water samples shall be conducted under the observation of the Consultant and the City. Testing and analysis of the water samples will be conducted by the Consultant.

12.6 Data Recording

The Contractor shall obtain and record the water level measurement, discharge rate, and total discharge in half-hour intervals throughout the duration of the spinner survey, or as directed by the Consultant.

12.7 Submittals

A. The Contractor shall submit to the Consultant for review and approval the test pump, motor, flow meter and totalizer, and accessories prior to testing.
B. Prior to the spinner survey, the Contractor shall provide a written certification that the flow meter and totalizer are calibrated to the manufactures specifications.
C. Water level measurements, flow meter readings, and totalizer readings.
D. The Geophysical logger shall provide five (5) field copies of the spinner survey to the Consultant and one (1) field copy to the City upon the completion of logging. Within 10 days after completion of logging, 10 final copies of the spinner survey shall be provided to the Consultant, as well as an electronic original of the logging data in Windows Metafile (*wmf) and PDF format.
E. The logging Subcontractor shall also provide a written spinner report that includes the amount of discharge from each zone of the well.

12.8 Measurements and Payments

Payment for labor, equipment, materials, and all other costs to complete the spinner survey will be made on a lump sum and hourly basis.

*** End of Section ***

13.0 Production Well Plumbness and Alignment

13.1 General

After the production well aquifer testing and spinner survey, the Contractor shall conduct a plumbness and alignment test of the well.

13.2 Plumbness and Alignment Requirements

The well shall meet all the following plumbness and alignment requirements.

1. AWWA Standard A100.
2. Plumbness tolerance. The maximum allowable horizontal deviation (drift) from vertical shall not exceed 10.66 inches per 100 feet of depth from the top of the well to the bottom of the well.
3. Alignment tolerance. The maximum allowable misalignment or "dogleg" is one that will allow a 40-foot long by 14-inch diameter (OD) dummy cylinder to pass freely and unobstructed from the top of the well to approximately 10 feet above the bottom of the well.

If the well fails to meet the above requirements, the Contractor must correct the plumbness and alignment to the satisfaction and approval of the Consultant and the City. Plumbness and alignment correction costs will be borne by the Contractor at no cost to the Owner.

13.3 Gyroscopic Survey

To demonstrate compliance with the plumbness and alignment requirements, the Contractor shall conduct a gyroscopic survey of the production well under the observation of the Consultant and the City. The quality and clarity of the gyroscopic log must be approved by the Consultant.

The gyroscopic survey logging Subcontractor and the specific gyroscopic logging tool to be used must be approved by the Consultant. The gyroscopic survey tool shall be centralized in the well, and the geophysical logging Subcontractor shall conduct two (2) 50-foot repeat sections to demonstrate accuracy and repeatability of the gyroscopic survey. The Consultant shall determine the location of the repeat sections based on the preliminary results of the gyroscopic survey. It is anticipated that one (1) of the repeat sections may be the location of the proposed pump setting.

13.4 Dummy Cylinder

To demonstrate compliance with the plumbness and alignment requirements, the Contractor may be required to furnish, install, and remove a test cylinder. The test cylinder shall be 40-feet long and 14-inches in diameter (OD).

13.5 Submittals

A. The Contractor shall submit for review and approval by the Contractor the gyroscopic logging Subcontractor and the specific gyroscopic logging tool to be used.

B. The gyroscopic logging Subcontractor shall provide five (5) field copies of the gyroscopic surveys to the Consultant and one (1) field copy to the City at the well site, immediately following the completion of gyroscopic survey.
C. The gyroscopic logging Subcontractor shall within ten (10) working days following completion of the gyroscopic survey submit to the Consultant ten (10) final copies of the gyroscopic survey and an electronic copy of the logging data in a Windows metafile (*.wmf) format, or other format approved by the Consultant. The Consultant shall provide one (1) paper copy and one (1) electronic copy of the gyroscopic survey with the Well Completion Report.
D. The gyroscopic logging Subcontractor shall also provide a written plumbness and alignment report that shall include 1) the numerical values of the well deviation and 2) a graphical diagram of the well alignment from both a profile perspective (both Northing and Easting views) and a vertical perspective.

13.6 Measurements and Payments

A. Payment for the gyroscopic survey will be made on a lump sum basis.
B. Payment for all labor, equipment, and materials for plumbness and alignment correction costs will be borne by the Contractor and at no cost to the Owner.
C. Payment for all labor, equipment, and materials to install and remove the test cylinder will be made on a lump sum basis.

*** End of Section ***

14.0 Production Well Video Survey

14.1 General

After the completion of the plumbness and alignment testing, the Contractor shall conduct a color video survey of the well. Any materials added to the well to improve the water clarity shall be approved by the Consultant prior to use. The video survey camera shall be capable of producing a clear and focused imaged of the well in both the downward-looking and side-view. The video survey shall, at a minimum, consist of a continuous down-hole scan, with periodic side-view scans at intervals requested by the Consultant and the City.

The video survey shall be conducted under the observation of the Consultant and the City and the quality and clarity of the well video must be acceptable to the Consultant and the City.

14.2 Submittals

A. The Geophysical Logger shall submit to the Consultant two (2) copies of the production well video in a DVD format.
B. The Geophysical Logger shall submit to the Consultant two (2) copies of the production well video survey report that includes, at a minimum, the following: depth intervals of blank casing, louvered casing, welds, and water level. The Geophysical Logger shall also provide one (1) electronic copy of the well video survey report in a PDF format.

14.3 Measurements and Payments

Payment for all labor, equipment, and materials will be made on a lump sum basis.

*** End of Section ***

15.0 Acceptance of Work

The Owner, Consultant, and the City shall all agree that the Contractor has completed the work in accordance with the specifications and that the well meets the following requirements.

1. The surface casing shall meet the plumbness and alignment requirements.
2. The production well shall meet the plumbness and alignment requirements.
3. The production well shall meet the sand production requirements.
4. All installed materials shall be new and free from defects.
5. Contractor must provide all records, reports, data, and other information required by the plans, specifications, Owner, Consultant, or City.

*** End of Section ***

Appendix B

HYDROGEOLOGIC SCOPE OF WORK

APPENDIX B

HYDROGEOLOGIC SCOPE OF WORK

1.0 DRILLING INSPECTION SERVICES

1. Consultant will oversee the drilling of the conductor casing and pilot borehole and will perform lithologic logging. Lithologic logging will enable Consultant to identify those portions of the aquifer with the greatest potential for groundwater production. Consultant will provide inspection services during the drilling of the pilot boring on a daily basis (typically 10 hours per day, 7 days per week).

2. The Consultant will analyze the drilled cuttings that have been collected at 10-foot intervals by the driller, and will prepare a descriptive, lithologic log of the drilled material. The drilled cuttings from each 10-foot interval will be collected in small sample bags as well as secured in specially designed chip trays, all of which will be provided to the City of Surprise for archival purposes.

3. Drilled cuttings from selected intervals of the borehole will be submitted for sieve analysis by a geotechnical laboratory to determine the appropriate well screen slot size and filter pack grain size necessary to prevent sand invasion when the well is in use.

2.0 GEOPHYSICAL LOGGING

The Consultant will oversee the performance of the geophysical logging, and will analyze and report geophysical logging results. The Consultant will coordinate with City of Surprise staff to be present during the geophysical logging, as required by the City. At a minimum, the geophysical logging suite will include:

- An electric log (resistivity and spontaneous potential);
- A caliper log of the pilot boring;
- A sonic (acoustic) log;
- A natural gamma log;
- A guard log; and
- A Magnetic Deviation or Gyroscopic Log.

As required by the City of Surprise, the geophysical logging company will be subcontracted by the drilling contractor and approved by the Consultant.

3.0 DEPTH-SPECIFIC (ZONAL) GROUNDWATER SAMPLING AND ANALYSIS

1. Consultant will select depth-specific (zonal) groundwater-sampling intervals on the basis of lithologic and geophysical analysis of the pilot borehole. The zonal groundwater samples will enable Consultant to prepare a final well design that will minimize the potential for migration of natural or man-caused contaminants into the well.

2. Each zonal sample will be collected by Consultant and provided to an Arizona-certified analytical laboratory for testing. The Consultant will coordinate with City of Surprise staff to obtain approval of recommended zonal sample depths. Duplicate samples will be collected from selected sample intervals and will be provided to a separate analytical laboratory for Quality Assurance/Quality Control (QA/QC) purposes.

3. Each sample will be analyzed for nitrate (NO_3-N), fluoride (F), chromium (Cr), arsenic (As), and total dissolved solids (TDS). Arsenic will be analyzed using the graphite furnace atomic adsorption (GFAA) method or the inductively coupled plasma (ICP) mass spec method, with a maximum detection limit of 0.005 milligrams per liter (mg/L). The water samples will also be analyzed for the common anions and cations: calcium (Ca), magnesium (Mg), sodium (Na), potassium (K), alkalinity as bicarbonate (as $CaCO_3$), sulfate (SO_4), and chloride (Cl), which will enable the Consultant to conduct an ion balance for QA/QC purposes. Reliability of the results that are provided by the analytical laboratory is critical, so to provide additional QA/QC, Consultant will provide a standard solution that will be submitted to the laboratory as a “blind sample” that is labeled similar to other groundwater samples. The standard solution will have known and certified concentrations of fluoride (F), nitrate (NO_3-N), arsenic (As), chromium (Cr), and total dissolved solids (TDS) so the reported results will provide confirmation of the laboratory’s analytical precision.

4. During sampling operations, Consultant personnel will provide appropriate monitoring and testing prior to sample collection. Temperature, conductivity, pH, and sand content of the discharge water will be monitored periodically by Consultant to assure that a representative groundwater sample is obtained.

5. Subsequent to collection of each zonal sample, Consultant will conduct a falling-head (slug) test to obtain a qualitative determination of the aquifer characteristics in that interval of the boring. Slug test data in open boreholes typically yield overly conservative results (an underestimate of the aquifer's hydraulic conductivity), but the falling-head test data will provide an essential estimate of the relative aquifer characteristics at different depths of the boring.

6. Based on the information collected, Consultant will prepare a final well design and will submit the design to the City for review and approval.

4.0 CONSTRUCTION INSPECTION SERVICES

1. After the completion of zonal groundwater sampling operations and the determination of a final well design, the pilot borehole will be reamed to its final diameter. The Consultant personnel will not inspect the reaming of the borehole but will remain on call and will communicate with the contractor daily, via telephone. The driller will be contractually obligated to report any unusual conditions, substantial problems, or equipment failures that could compromise the integrity of the well.

2. During the well construction (including casing and screen installation and annular material installation), Consultant will provide continuous (24-hour per day) inspection. The Consultant will provide inspection services during well construction on a continuous basis (24-hours per day) throughout the construction period. Continuous inspection of the casing, screen, and annular material installation will assure that the well installation is conducted in compliance with the materials and construction standards that have been specified. Consultant personnel will document the construction materials; installation techniques; and well development techniques via pipe tallies, cement grout records, development records, etc. Samples of the filter pack material, fine sand material, bentonite, pea gravel, and cement grout will be collected to determine conformance with the project specifications, and a detailed As-Built diagram of the production well will be prepared for inclusion in the Well Installation Report.

3. Consultant will also provide inspection services on a daily basis (averaging 8 hours per day) during the well development period to assure that the well development is conducted in compliance with the specified standards and in a manner consistent with local aquifer conditions. In addition, Consultant will provide inspection services for the final well video survey and the plumbness and alignment test. The Consultant will coordinate for City of Surprise staff to be present during both the video survey and the plumbness and alignment test (gyroscopic survey), as required by the City.

The Consultant will prepare a video survey log to document the content of the final video. The drilling contractor will be required to provide a plumbness and alignment report.

5.0 POST-CONSTRUCTION WELL TESTING AND ANALYSIS

1. Consultant will coordinate and analyze a 10-hour step-rate pumping test and a 24-hour constant-rate pumping test at the new well. This task also includes a pumping spinner flowmeter survey, groundwater quality sampling, and a 4-hour water level recovery test (after the completion of the constant-rate pumping test).

2. The step-rate test will consist of several varying pumping rates (steps), each approximately 2 hours in duration. As required by the City of Surprise, groundwater samples will be collected 15 minutes, 30 minutes, 60 minutes, and 115 minutes after the start of each pumping step. These groundwater samples will be analyzed by an Arizona certified analytical laboratory for nitrate (NO_3), fluoride (F), arsenic (As, via GFAA or ICP mass spec, as described above), chromium (Cr), and total dissolved solids (TDS). Additionally, samples collected near the end of each step (115 minutes) will be analyzed for the common anions and cations listed above. Consultant will record the water level measurements and water quality field parameters, including electrical conductivity, sand content, pH, and temperature of the discharge water.

3. Following the step-rate test, a constant-rate test of approximately 24 hours will be conducted. During the constant-rate test, Consultant will collect water level measurements and water samples. The optimum pumping rate of the well (determined during the step-rate test) will be maintained throughout the constant-rate test. As required by the City of Surprise, groundwater samples will be collected after the well has been pumped for 5 minutes, 15 minutes, 30 minutes, 45 minutes, 60 minutes, 2 hours, 3 hours, 4 hours, 6 hours, 8 hours, 10 hours, 15 hours, 20 hours, and 24 hours.

4. The groundwater samples will be analyzed by an Arizona certified analytical laboratory for nitrate (NO3-N), fluoride (F), arsenic (As, via GFAA or ICP mass spec, as described above), chromium (Cr), and total dissolved solids (TDS). Samples collected at 60 minutes, 4 hours, 10 hours, and 24 hours will also be analyzed for the common anions and cations listed in above. Additionally, samples collected at 4 hours will be analyzed for New Source (Phase II/Phase V) analytes, as well as constituents important in the design of arsenic treatment options, including aluminum (Al), alkalinity (as CaCO3), speciated arsenic (arsenic III and V), arsenic (total As), bicarbonate (as CaCO3), calcium (Ca), chloride (Cl), speciated chromium

(chromium III and chromium VI), chromium (total Cr), fluoride (F), hardness (total), HPC (heterotrophic plate count), iron (Fe), magnesium (Mg), manganese (Mn), nitrate (as N), perchlorate, pH (field measurement), phosphate (as P), selenium (Se), silica (as SiO_2), sodium (Na), sulfate (SO4), total dissolved solids (TDS), total suspended solids (TSS), turbidity, and vanadium (V).

5. The results of the treatment analytes will be summarized in a separate table in the well installation report. However, those analytes that are already included in the 4-hour sample (such as alkalinity, total arsenic, bicarbonate, calcium, chloride, chromium, fluoride, magnesium, nitrate, field pH, sodium, sulfate, and TDS) will not be re-analyzed for the treatment analyses. Consultant will record the water level measurements and water quality field parameters, including electrical conductivity, sand content, pH, and temperature of the discharge water.

6. A pumping spinner flowmeter survey and additional sampling and will be conducted during the constant-rate test. A pumping spinner flowmeter survey provides an indication of the specific depth intervals in the well from which groundwater is being produced. The Consultant will coordinate for City of Surprise staff to be present during the spinner logging, as required by the City. The spinner logging will include a minimum of three logging runs. The spinner survey will be conducted after the well has been pumped for approximately 4 hours, to allow hydrologic conditions in the aquifer to stabilize and to allow sampling for New Source analytes and treatment analytes prior to the start of the survey.

7. The Consultant will provide recommended sampling depths the City, for collection of depth-specific (zonal) groundwater samples from the well, based on the results of the spinner flowmeter survey.

8. A water sample will also be collected from the well discharge at the land surface. The water samples collected during the spinner survey will be submitted by the Consultant to an Arizona certified analytical laboratory for testing of nitrate (NO3-N), fluoride (F), arsenic (As, via GFAA or ICP mass spec, as described above), chromium (Cr), and total dissolved solids (TDS) concentrations.

9. After the cessation of pumping, Consultant will conduct a water level recovery test for a period of 4 hours, or until 95 percent water level recovery has been achieved (whichever occurs first).

6.0 WELL INSTALLATION REPORT

Consultant will prepare a Well Installation Report summarizing all work conducted during the installation of the public supply well. The report for the well will include documentation collected during well drilling and installation, including but not limited to geologist notes, pipe tallies, grout records, penetration rate logs, geophysical logs, the lithologic log, zonal groundwater sample results, falling-head testing results, aquifer test results, final water quality results, the final plumbness and alignment analysis, and the final video log. The Well Installation Report will also present recommendations for the optimum pumping rate and pump setting. A detailed As-Built drawing will be included in the report. The deliverables will include five (5) draft copies and five (5) final copies of the Well Installation Report. In addition, the final Well Installation Report will be provided in *.pdf format on CD. A Well Completion Report Outline is attached to Appendix B.

Appendix C

WELL COMPLETION REPORT OUTLINE

APPENDIX C

WELL COMPLETION REPORT OUTLINE

1.0 INTRODUCTION

2.0 DRILLING AND INSTALLATION OF THE WELL
- 2.1 Surface Casing Installation Pilot Hole Drilling
- 2.3 Lithologic Log
- 2.4 Geophysical Well Logging
- 2.5 Zonal (Depth-Specific) Groundwater Sampling
- 2.6 Well Design Considerations
- 2.7 Pilot Hole Reaming
- 2.8 Well Installation
- 2.9 Well Development

3.0 POST CONSTRUCTION WELL ANALYSES
- 3.1 Step Rate Pumping Test
- 3.2 Constant Rate Aquifer Test
- 3.3 Water Quality
- 3.4 Plumbness and Alignment Test
- 3.5 Final Well Video

4.0 WELL SUMMARY

5.0 FINDING AND RECOMMENDATIONS

LIST OF FIGURES

Figure 1 Well Location Map
Figure 2 As-Built Figure
Figure 3 Generalized Geologic, Geophysical, and Zonal Groundwater Quality Data
Figure 4 Step-Rate Pumping Test
Figure 5 Analysis of Step-Rate Pumping Test
Figure 6 Cooper-Jacob Plot
Figure 7 Theis Recovery Plot

LIST OF TABLES

Table 1 Zonal Groundwater Sampling Analytic Results
Table 2 Zonal Groundwater Sampling Ion Balance
Table 3 Langelier Index Calculations for Zonal Groundwater Intervals
Table 4 Inventory of Materials Used
Table 5 Sieve Analysis Results
Table 6 Dynamic Spinner Analysis
Table 7 Post-Construction Sampling Analytical Results

LIST OF APPENDICES

Appendix A	Permitting Documents
Appendix B	Photographs
Appendix C	Well Drilling and Installation Methods
Appendix D	Lithologic Data
Appendix E	General Geophysical Log Interpretations
Appendix F	Zonal Groundwater Sampling Analytical Results
Appendix G	Well Installation Documentation Forms
Appendix H	Well Development Documentation Forms
Appendix I	Aquifer Test Data
Appendix J	Source Approval Documentation
Appendix K	Service Area Well Documentation and Well Impact Analysis
Appendix L	Post-Construction Well Video Log
Appendix M	Post-Construction Analytical Results

LIST OF PLATES

Plate A	Geophysical Logs
Plate B	Plumbness and Alignment Test Results
Plate C	Spinner/Flowmeter Survey

City of Surprise

Wastewater Facility Guidelines
Volume 3 of 3

Public Works Department

April 2011

FINAL

4600 East Washington, Suite 500 • Phoenix, Arizona 85034 • P. 602.263.9500 • F. 602.265.1422

City of Surprise

Wastewater Facility Guidelines

Volume 3 of 3

TABLE OF CONTENTS

Page No.

CHAPTER 16 LARGE DIAMETER WASTEWATER INTERCEPTORS

16.01 General 16-1
16.02 Concept Design Review (CDR) Phase 16-1
16.03 Agency and Utility Coordination 16-3
16.04 Final Design Phase 16-6
16.05 Design Flows 16-6
16.06 Pipe Materials 16-7
16.07 Hydraulic Analysis 16-8
16.08 Hydraulic Design Criteria 16-9
16.09 Structural Design Criteria 16-10
16.10 Vertical and Horizontal Alignment Considerations 16-11
16.11 Pipe Bedding and Backfill 16-11
16.12 Curved Wastewater Interceptors 16-12
16.13 Manholes 16-13
16.14 Inverted Siphons and Air Jumpers 16-14
16.15 Trenchless Technologies 16-15
16.16 Marking Tape and Marker Balls 16-16

CHAPTER 17 WASTEWATER LIFT STATIONS

17.01 General 17-1
17.02 Concept Design Review (CDR) Phase 17-1
17.03 Agency and Utility Coordination 17-4
17.04 Final Design Phase 17-4
17.05 Design Flows 17-4
17.06 Hydraulic Analysis 17-5
17.07 Pumping Capacity 17-6
17.08 Wet Well Design 17-7
17.09 Force Main Design 17-9
17.10 Site Civil 17-10
17.11 Signage 17-10
17.12 Access Gates 17-10
17.13 Security 17-11
17.14 Mechanical Layout 17-11
17.15 Noise Attenuation 17-11
17.16 Odor Control Facilities 17-11
17.17 Vault Standards for Wastewater Lift Stations 17-12
17.18 Wastewater Pumping Systems Design 17-13
17.19 Piping Systems 17-14

17.20 Force Mains....17-15
17.21 Pumps....17-16
17.22 Pump Motor....17-18
17.23 Heating, Ventilation, Air Conditioning (HVAC)....17-19
17.24 Standby Power....17-19
17.25 Support Systems....17-20
17.26 Fire Protection....17-22
17.27 Electrical and Instrumentation....17-22
17.28 Controls....17-22

CHAPTER 18 RECLAIMED WATER PIPELINES
18.01 General....18-1
18.02 Concept Design Review (CDR) Phase....18-1
18.03 Agency and Utility Coordination....18-3
18.04 Final Design Phase....18-5
18.05 Design of Pipeline Systems....18-6
18.06 Fittings and Appurtenances....18-7
18.07 Pipe Joints....18-7
18.08 Trench Design....18-7
18.09 Reclaimed Water Identification....18-8
18.10 Steel Pipe Design....18-8
18.11 Ductile Iron Pipeline Design....18-8
18.12 Protective Coatings and Linings....18-8
18.13 Isolation Valves....18-9
18.14 Appurtenances and Structures....18-9
18.15 Disinfection....18-10

CHAPTER 19 RECLAIMED WATER STORAGE RESERVOIRS
19.01 General....19-1
19.02 Site Considerations....19-1
19.03 Concept Design Review (CDR) Phase....19-2
19.04 Agency and Utility Coordination....19-4
19.05 Final Design Phase....19-4
19.06 Volume Criteria....19-5
19.07 General Design Requirements....19-6
19.08 Reclaimed Water Identification....19-7
19.09 Concrete Reservoir Design....19-8
19.10 Steel Tank Design....19-8
19.11 Water Quality Provisions....19-8
19.12 Electrical Systems....19-8
19.13 Instrumentation and Control....19-8
19.14 Landscaping....19-9

CHAPTER 20 RECLAIMED WATER PUMP STATIONS
20.01 General....20-1
20.02 Definitions....20-1
20.03 Concept Design Review (CDR) Phase....20-1
20.04 Agency and Utility Coordination....20-4
20.05 Final Design Phase....20-4
20.06 Hydraulic Analysis....20-4

20.07 Surge Analysis 20-5
20.08 Surge Mitigation Measures 20-6
20.09 Vault Standards 20-6
20.10 Flow Measurement 20-7
20.11 General Structural Design Loads 20-7
20.12 Architecture and Landscaping 20-7
20.13 Pump Systems Design 20-7
20.14 Pump Speed Control 20-7
20.15 Pump Station Piping and Valves 20-7
20.16 Reclaimed Water Identification 20-7
20.17 Pump Motors 20-8
20.18 Pump Inlet Configuration 20-8
20.19 Vertical Turbine Pumps 20-8
20.20 Horizontal, Split-Case Pumps 20-8
20.21 Vibration 20-8
20.22 Heating, Ventilation, Air Conditioning (HVAC) 20-9
20.23 Signage 20-9
20.24 Access Gates 20-9
20.25 Security 20-9
20.26 Noise Attenuation 20-9
20.27 Support Systems 20-9
20.28 Fire Protection 20-9
20.29 Chlorination Provisions 20-10
20.30 Analog Instrument Provisions 20-10
20.31 Electrical Systems 20-10
20.32 Instrumentation and Control 20-11

CHAPTER 21 RECHARGE AND RECOVERY FACILITIES
21.01 General 21-1
21.02 Definitions 21-1
21.03 Agency and Utility Coordination 21-3
21.04 Concept Design Review (CDR) Phase 21-4
21.05 Final Design Phase 21-6
21.06 Surface Infiltration Basins 21-7
21.07 Aquifer Storage and Recovery (ASR) Wells 21-11
21.08 Vadose Zone Injection Wells (VZIWs) 21-15
21.09 Injection Wells 21-18
21.10 Recovery Wells 21-19
21.11 Monitoring Wells 21-19
21.12 Corrosion Control 21-20
21.13 Materials 21-20
21.14 Support Systems 21-21
21.15 Electrical Systems 21-22
21.16 Instrumentation and Control 21-23

LIST OF FIGURES

Figure 16.1A Typical Siphon Outlet Structure 16-17
Figure 16.1B Typical Siphon Inlet Structure 16-18
Figure 17.1 Wastewater Lift Station Wet Well & Valve Vault Top Plan 17-26
Figure 17.2 Wastewater Lift Station Wet Well & Valve Vault Bottom Plan 17-27
Figure 17.3 Wastewater Lift Station Typical Lift Station Section 17-28
Figure 17.4 Wastewater Lift Station Typical Site Layout 17-29
Figure 17.5 Wastewater Lift Station Typical Floor Plan 17-30
Figure 21.1 Surface Infiltration Basin - Conceptual Design 21-26
Figure 21.2 ASR Well Facility Belowground Conceptual Well Design 21-27
Figure 21.3 ASR Well Facility Conceptual Pump & Flow Control Valve Setting 21-28
Figure 21.4 ASR Well Facilities Conceptual Aboveground Completion 21-29
Figure 21.5 Vadose Zone Well Facility Conceptual Aboveground Completion 21-30
Figure 21.6 Vadose Zone Well Facility Conceptual Belowground Completion 21-31
Figure 21.7 Typical Monitoring Well Design 21-32
Figure 21.8 Monitoring Well-Wellhead Completion & Equipping 21-1

LIST OF APPENDICES

Appendix D – Technical Specifications for Typical Monitoring Well

CHAPTER 16 LARGE DIAMETER WASTEWATER INTERCEPTORS

16.01 General

A. The intent of this chapter is to provide guidelines for the design of large diameter wastewater interceptors with diameters larger than 15 inches up to 60 inches. For diameters 15 inches and less, the EDS requirements govern.

B. Meet the requirements of the following except as modified herein:

1. COS EDS.
2. *Arizona Administrative Code (AAC) R18-9-E301.*
3. MAG Standard Specifications and Details.

C. Design in accordance with Chapter 7 of the EDS using methods described in *ASCE Manual No. 60 Gravity Sewer Design and Construction* unless indicated otherwise herein.

16.02 Concept Design Review (CDR) Phase

A. General: The CDR phase of the project shall be presented in a CDR report, which shall be submitted to the City for review and approval. The CDR is the basis for the subsequent design process and must therefore provide a thorough description of the project.

B. CDR Report: The CDR shall meet the general CDR requirements noted in Chapter 1 of these Standards and Guidelines. The CDR shall also include the following at a minimum:

1. Executive Summary.
2. Table of Contents.
3. Description of existing flows and conditions.
4. Summary of utility conflict information, including pothole information or recommendations for utilities locations per Chapter 2.
5. A list of major stakeholders with contact information for each.
6. Topographic mapping information summary, per Chapter 2.
7. Draft Geotechnical Investigation Report, which addresses excavation, pipe bedding, and pipe backfill per Chapter 3.

8. Draft Traffic Study, per Chapter 1.
9. Draft Environmental Investigation Report, per Chapter 1.
10. Draft Corrosion Control/Cathodic Protection Report, per Chapter 5.
11. Preliminary Drainage Report, per Chapter 2.
12. Summary of the applicable drainage and traffic study findings with references to those documents submitted separately.
13. Preliminary plans and centerline profiles (30 percent design drawings) illustrating the recommended pipeline alignment and profile, proposed site plans and improvements, offsite improvements, sections, elevations, details, existing topography, adjacent and underlying property ownership, ROW/easements, etc.
14. Alternative alignments evaluated and recommended alignment.
15. Recommendations for connections to existing facilities, as well as future connection(s) and tee locations.
16. Recommendations regarding pipeline design parameters and materials.
17. Recommendations for boring, jacking, or micro-tunneling as well as proposed locations of vertical shafts if applicable.
18. Identification of appurtenant facilities and spacing criteria.
19. Recommendations for bidding packages, scheduling, contractor staging, construction sequencing, and impacts to public areas and other stakeholders.
20. Identification of any permanent and temporary ROW/easement constraints and acquisition needs.
21. Design calculations.
22. Matrix summary of permits to be obtained.
23. List of agencies, stakeholders, and utilities to review and sign the drawings.
24. Outline of technical specification sections and preliminary list of final design drawings.
25. Preliminary quantities and associated cost estimates.

26. Preliminary construction schedule.

27. Project correspondence file, including meeting minutes.

28. Inventory of existing facilities and improvements.

29. Flow monitoring data:
    a) Obtain from COS for surrounding communities, if available and applicable to project
    b) If flow monitoring data are not available, collect flow data as described in this chapter

30. List of reports, plans and maps reviewed, and other relevant project information.

31. Work plan for how construction is to be accomplished if connecting into existing facilities (phasing, shutdowns, etc.).

16.03 Agency and Utility Coordination

A. The Engineer shall initiate contact and coordinate efforts with outside utilities and agencies in accordance with Chapter 1.

B. Existing Utilities:

1. It is the responsibility of the Engineer to coordinate with all utility entities during design to accurately identify and locate all existing utilities in the project area.

2. All existing and proposed public and private utilities shall be presented on plan and profile drawings. See respective sections in this chapter for Blue Stake and potholing requirements. Examples of utilities include but are not limited to water, irrigation, wastewater collection, storm water collection, gas, petroleum, power, communication, fiber optic, and traffic control.

C. Record Drawings of Existing Utilities:

1. It is the Engineer's responsibility to obtain all available utility maps and as-built drawings from utility companies when infrastructure crosses or parallels a proposed City pipeline.

D. Field Verification of Utilities:

1. It is necessary to perform a field reconnaissance to locate existing utilities along the proposed pipeline alignment. Usually this is done with the field survey or walk thru completed as part of the CDR. The

location of the existing utilities shall be compared with the locations recorded on utility drawings and utility maps. If discrepancies exist between utility drawings and field data, the particular utility or entity shall be contacted to resolve the discrepancy. Any Blue Stake markings or future facility markings should be field located and included on the plans.

E. Blue Stake:

1. Blue Stake shall be contacted at least 48 hours prior to digging at 602-263-1100 or 811. Water-soluble white paint shall be used to mark the project area for the various Blue Stake member agencies.

2. The potholing or geotechnical boring companies shall be responsible for contacting Blue Stake directly and shall provide Blue Stake with the street address, cross streets, city, and county to identify the location of the work. In open country, USGS coordinates shall be provided unless Blue Stake requests another form of location information. The construction contractor shall be responsible for contacting Blue Stake during construction of the project.

F. Potholing:

1. All utility crossings or close utility interference shall be located and exposed by digging test pits (potholes). The design survey shall record the size, nature, and location of the potential crossing by station, offset, and elevation.

2. The number of potholes required shall be sufficient to determine the alignment and grade of the utility.

3. Use of “Soft Dig” technologies such as vacuum excavators is encouraged to minimize the amount of soil disturbed during the potholing process.

4. Any disturbance to pavement, roads, or soil during potholing work shall be fully restored in accordance with COS EDS.

5. Any repairs or damages caused by potholing shall be the responsibility of the potholing contractor.

6. The Engineer shall be responsible for coordinating the potholing effort. The pothole contractor shall be required to obtain all permits related to their work.

G. Separation Requirements:

1. Minimum separation distances shall be maintained around all utilities, in accordance with ADEQ and MCESD requirements. The most stringent requirement governs. The Engineer is responsible for obtaining the separation requirements from each utility, and for maintaining the necessary clearances for the pipeline.

2. Horizontal and vertical separation of wastewater collection lines, reclaimed water pipelines, and storm drains from potable water facilities must comply with the current ADEQ requirements, as reflected in MAG Standard Detail 404.

3. Where separation requirements vary, the most stringent requirement governs.

H. Utility Relocations:

1. Utility relocations may include but are not limited to existing communications cable, utility power, wastewater collection, natural gas, or petroleum.

2. If the relocation of an existing utility is necessary, an evaluation of the feasibility of moving an existing utility shall be conducted and relocation alternatives shall be developed with the utility owner.

3. The utility owner shall be presented with the alternatives developed for utility relocation. If all issues are addressed and the utility owner is agreeable to relocating the utility, the utility owner shall determine if they will design the relocation or if the Engineer will proceed with the relocation design.

4. The drawings for relocating utilities shall be included in the contract documents, unless the utility owner chooses to relocate its own utility.

5. For relocation of existing pipelines, the Engineer shall determine a new alignment, the new high or low points, and if air/vacuum valves and/or blowoff assemblies are needed.

6. Once a decision is made to relocate an existing utility and the preferred alignment is set, provisions shall be included in the contract documents for uninterrupted service during construction, unless otherwise allowed by the utility owner.

7. Costs: Utility relocation fees shall be included with the cost of the project and are not paid directly by the City.

16.04 Final Design Phase

A. General: The Engineer shall provide a Final Design with progress submittals to the COS at 60 percent and 90 percent level of completion in accordance with Chapter 1, which builds upon work completed during the CDR. The Final Design shall include:

1. Final design drawings that include sheet index and utility signatures.
2. Final specifications.
3. Final drawings and specifications shall meet the general requirements presented in Chapter 1.
4. Final Geotechnical Investigation Report.
5. Final Traffic Study.
6. Final Environmental Investigation Report.
7. Final Corrosion Control/Cathodic Protection Report.

16.05 Design Flows

A. Wastewater Generation Rates: The Engineer shall meet with COS personnel to discuss the initial and ultimate wastewater hydraulic and organic loading that is anticipated for the proposed wastewater interceptor. Sources of flow and land uses will be identified and overall project phasing must be established.

B. Wastewater Flows: For existing service areas, the COS may provide flow data if available. Where flow data are not available, collect hourly flow data from a location applicable to the project for a duration of not less than 30 days in order to estimate flows and peaking factors. For new service areas, the Engineer can estimate wastewater flows and peaking factors based on historical data for the surrounding area or accepted values based on the service area. The following flows shall be calculated at a minimum:

1. Minimum Daily Flow: The design shall consider minimum wastewater flow for the service area during off-peak, night-time hours during initial conditions.
2. Average Daily Flow: The design shall consider the average flow for the service area for a 24-hour composite.
3. Maximum Daily Flow: The design shall consider the maximum day flow for the service area.

4. Peak Hour Flow: The design shall consider peak, wet weather wastewater flow from the service area, which shall include peak wastewater flow with a wet-weather allowance per the current IWMP.

C. Infiltration Flows: Include infiltration flow component in areas based on high groundwater elevation for the area based on soil borings if applicable.

D. Stormwater Flows: Include stormwater flow component based on historical data to estimate Peak-Hour Wet Weather flow. In the absence of historical data, utilize peaking factors presented in *AAC R18-9-E301*.

16.06 Pipe Materials

A. General: The pipe materials in this section are approved for large diameter wastewater interceptors.

B. Ductile Iron Pipe up to 36-inch diameter in accordance with the following:

1. Designed in accordance with current version of AWWA Manual M41 and MAG Section 750

2. Minimum Class: Pressure class of 150 unless otherwise determined by anticipated external soil and vehicle loads in accordance with AWWA Manual M41.

3. Joints and Gaskets: Push-on joints with EPDM or neoprene gaskets per ANSI/AWWAW C111/A21.11

4. Fittings: Include wyes, tees, 45-degree elbows, plug adapters, which shall be the same thickness of the pipe.

5. Lining and Coating: Line with minimum 40 mil of ceramic epoxy lining or as recommended by Corrosion Engineer, per Chapter 5, and coat with asphaltic base coating per manufacturer and in accordance with AWWA C151.

6. Double wrap in polyethylene that conforms to AWWA C105 and C600. Wrap shall be black in color and labeled “Caution, Sanitary Sewer Line.”

7. Deflection shall not exceed 75 percent of manufacturer’s recommended value.

C. PVC up to 24-inch diameter in accordance with the following:

1. Designed in accordance with latest edition of *Uni-Bell Handbook of PVC Pipe.*

2. Material in accordance with ASTM F 679.

3. Minimum DR=35.

4. Gaskets: Provide Neoprene or Buna-N gaskets per ASTM D 3212 or ASTM F 477.

5. Joints: Provide integral bell gasketed, push-on, leak-proof joints in accordance with ASTM F 679. Bell to be fabricated from pipe sections with thickness of the wall equivalent to the pipe wall thickness and gasket ring locked into the bell.

6. Fittings: Includes wyes, tees, 45-degree elbows, plug adapters, which shall be the same thickness of the pipe at a minimum.

7. Maximum deflection of 3 percent.

D. FRMP up to 60-inch diameter in accordance with the following:

1. Designed in accordance with latest edition of AWWA *Manual M-45 Fiberglass Pipe Design.*

2. Minimum SN = 36.

3. Wall Thickness: As designed to provide a wall thickness to meet working pressure and stiffness requirements. The wall thickness shall provide a thickness to diameter ratio of not less that 1.25 percent.

4. Material in accordance with AWWA C950.

5. Joints: Provide gasketed, push-on, leak-proof joints in accordance with ASTM D4161.

6. Fittings: Includes wyes, tees, elbows, plug adapters, which shall be the same thickness of the pipe at a minimum.

7. Maximum deflection of 3 percent.

16.07 Hydraulic Analysis

A. General: The Engineer is required to develop a hydraulic model of the service area using information from the City regarding the existing wastewater collection system. Available information on the collection system will be used, which includes GIS, peaking factors, and diurnal flow fluctuations. Wastewater flows will be analyzed with the use of an extended period simulation (EPS) that demonstrates how the proposed wastewater

interceptor is sufficient to convey the design flows and satisfy the hydraulic design criteria.

B. The hydraulic modeling shall utilize computer simulations of the proposed wastewater interceptor utilizing modeling software currently used by the COS. The analysis must be coordinated with the COS overall model of the collection system for points of entry into the model. Include current flow monitoring data and peaking factors. Also, include existing collection system facilities and proposed facilities with scenarios for initial and buildout conditions as described herein. Simulations will be used to evaluate pipe velocity and capacity for the proposed wastewater interceptor.

C. Scenarios: Flow scenarios for initial and buildout conditions will include the following at a minimum:

1. Minimum Daily Flow.

2. Average Daily Flow.

3. Peak-Hour Wet Weather Flow.

D. The results of the hydraulic modeling shall be summarized in a table that shows the average, peak, and minimum hour flow rates for each proposed project phase. This data will be used to size pumping units, piping, odor control, and force main systems.

E. Hydraulic Jumps: Design system to avoid hydraulic jumps wherever possible. Where velocities may reach 10 ft/s or greater, provide energy dissipation measures as approved by the COS to minimize erosion.

16.08 Hydraulic Design Criteria

A. General: Design in accordance with Chapter 7 of the EDS except as modified herein.

B. Compare velocity criteria, slope criteria, and flow depth criteria with criteria presented in the latest Integrated Water Master Plan (IWMP).

C. Velocity Calculation: Calculate the velocity using the Manning Equation with an appropriate pipe roughness coefficient for the pipe material as described in *ASCE Manual of Practice No. 60 for Gravity Sanitary Sewer Design and Construction*.

D. Velocity Criteria, unless indicated otherwise in the latest IWMP:

1. Minimum Velocity: Provide a velocity of at least 2 ft/s at a frequency of at least once per day.

2. Maximum Velocity: The velocity shall not exceed 10 ft/s under Peak Wastewater Flow.

E. Manning's Roughness Coefficient Values: Utilize the following values for the pipe material provided unless otherwise indicated in the latest IWMP.

1. For PVC, use n=0.010

2. For FRMP, use n=0.010

3. For alternate materials, provide written justification to the COS with proposed roughness coefficient for approval.

F. Minimum Slope Criteria: Provide sufficient slope to provide sufficient capacity as well as achieve self-cleaning velocities to scour solids. Slope shall be not less than 0.0065 ft/ft.

G. Flow Depth Criteria: Ensure that the pipe capacity ensures that open channel flow conditions with a free water surface are maintained based on the ratio of flow depth (d) to the diameter of the pipe (D). The flow depth criteria are provided as follows unless indicated otherwise in the latest IWMP:

1. The flow depth (d) shall be at or below the critical depth during the following conditions.

2. Average Daily Flow: The d/D ratio shall not exceed 0.5.

3. Peak Dry Weather Flow: The d/D ratio shall not exceed 0.80.

16.09 Structural Design Criteria

A. General: The Engineer is responsible to determine all loads on the pipe, which include but are not limited to soil loads, dead loads, and live loads.

B. Structural Loads shall be used for pipe calculations that consider pipe material, pipe bedding, and backfill, as well as depth of cover.

C. Hydrostatic Buoyancy: Consider hydrostatic buoyancy of the empty pipeline where the vertical alignment will encounter groundwater or if pipelines are located within a 100-year floodplain.

D. Traffic Loads: Design pipelines in roads and areas subjected to vehicle loads in accordance with methods presented in AASHTO, which consider the following along the entire alignment at a minimum:

1. H20 vehicle loads.

2. Construction vehicle loads such as backhoes and cranes.

3. Impact vehicle factor for dynamic traffic loads based on minimum pipe cover.

E. Distributed Loads: Design pipelines for distributed loads along the entire alignment, which consider the following at a minimum:

1. Soil Loads.

2. Building Loads, where applicable.

F. Steel Casing: Structural loads and/or minimal cover may require use of steel casing.

G. Piping Connections to Structures: Provide two flexible couplings at structures spaced in accordance with differential settlement determined by geotechnical report (Chapter 3).

16.10 Vertical and Horizontal Alignment Considerations

A. General: Provide separation in accordance with Chapter 7 of the EDS unless indicated otherwise herein.

B. Dry Utility Separation: Maintain minimum 24-inch vertical and horizontal separation from dry utilities in accordance with the EDS. Dry utilities include but are not limited to the following:

1. Fiberoptic.

2. Electrical Ductbank.

3. Natural Gas.

C. Wet Utility Separation: Maintain horizontal and vertical separation from wet utilities in accordance with MAG and in accordance with Chapter 7, Section 7.6 of the EDS.

16.11 Pipe Bedding and Backfill

A. General: Provide bedding and backfill in accordance with Chapter 7 of the EDS unless indicated otherwise herein.

B. Pipe Zone: Use aggregate material or controlled low strength material (1/2 sack CLSM) with a compressive strength of 150 to 300 psig in accordance with MAG Section 604 and as approved by the COS Public Works Director.

C. Pipe Cover: Provide pipe cover as measured from finished grade to the top of the pipe in accordance with the following:

1. Geotechnical borings are required along the alignment for interceptors.

2. Minimum cover as measured to top of the pipe is 6 feet.

3. Provide reinforced concrete encasement or steel casing if topography results in cover less than 6 feet of cover.

4. Maximum Cover: 15 feet unless approved in writing by COS Public Works Director. Pipelines greater than 15-foot depth must be considered on an individual basis and are required to include structural calculations that demonstrate the suitability of the pipe materials and installation methods proposed for review by the COS.

5. Erosion: Avoid placing pipelines in areas subject to flooding during 100-year storm events. Provide CLSM or concrete cap for erosion protection if finished grade is subject to flooding.

16.12 Curved Wastewater Interceptors

A. General: The use of curved interceptors must be justified by the Engineer during the CDR phase with a description of existing conflicts as well as site and economic constraints that have resulted in the need for curved wastewater interceptors.

B. Approval: The COS Public Works Director must issue written approval during the CDR for projects where curved wastewater interceptors are proposed.

C. Easement: Provide easement in accordance with Chapter 7 and the following:

1. Minimum width of 20 feet as determined by the Engineer.

2. Curved wastewater interceptors should be equidistant from the roadway or easement centerline at all points along the curvilinear portion of the pipeline alignment.

D. Maximum Deflection: Do not exceed 75 percent of the pipe manufacturer's maximum allowable deflection for curved wastewater interceptors.

E. Horizontal Curvature:

1. Minimum horizontal radius of curvature shall be at least 200 feet unless otherwise approved by the COS Public Works Director.

2. Rigid Pipes: Provide curvature through joint deflection based on not more than 75% of the manufacturer's maximum joint deflection.

3. Flexible Pipes: Provide curvature through combination of joint deflection and axial bending of the pipe based on a joint deflection of not more than 75% of the manufacturer's maximum values for each.

F. Vertical Curvature: Minimum horizontal length for a vertical curve shall be not less than 40 feet unless otherwise approved by the COS Public Works Director.

16.13 Manholes

A. General: Provide manholes in accordance with Chapter 7 of the EDS unless indicated otherwise in this section.

B. Access:

1. All manholes located outside the paved right-of-way shall have adequate vehicle access for COS maintenance vehicles.

2. All manholes located outside of public right-of-way shall be equipped with locking cast iron covers with concrete collars.

C. Manholes are required under the following conditions:

1. Change in pipe size or pipe material.

2. At discharge of wastewater force mains.

3. At intersection of mains.

4. At the terminal end of a wastewater interceptor.

D. Manholes are not allowed under the following conditions:

1. Inaccessible areas.

2. Gutters and depressions subject to flooding.

3. Sidewalks, crosswalks, or driveways.

4. Within 10 feet of any structures.

E. Distance Between Manholes: Provide distance between manholes in accordance with the following :

1. Interceptors from 16 Inches to 24 Inches: Spaced in accordance with the EDS.

2. Interceptors 24 Inches and Larger: Spaced in accordance with the EDS.

F. Manhole Requirements: Provide eccentric or concentric cast-in-place or precast concrete manholes in accordance with Chapter 7 and MAG Uniform Standard Details for Public Works Construction. Base shall be grouted along flow line with epoxy grout at a depth of not less than 6 inches.

G. Manhole Diameters: Provide manhole diameters in accordance with the following:

1. Interceptors from 16 Inches to 24 Inches: Minimum diameter of 60 inches.

2. Interceptors 24 Inches and Larger: Minimum diameter of 72 inches.

H. Corrosion Control: Provide epoxy lining system of manholes in accordance with Chapter 5 with a minimum thickness of 50 mils DFT unless otherwise recommended by the Engineer. Use of PVC lining for corrosion protection of concrete is not acceptable.

16.14 Inverted Siphons and Air Jumpers

A. General: The use of siphons and air jumpers must be justified by the Engineer during the CDR phase with a description of existing conflicts as well as site and economic constraints that have resulted in the need for siphons and air jumpers. The Engineer must identify all proposed locations of inverted siphons in the CDR phase.

B. Approval: The COS Public Works Director must issue written approval during the CDR for projects where siphons and air jumpers are proposed.

C. Siphon: Design of inverted siphons must provide a minimum velocity of 3 ft/s under average daily flow.

D. Air Jumpers: Provide a separate overhead air jumper pipe to facilitate air movement. The jumper pipe shall be sized by the Engineer with a cross-sectional area not less than 50 percent of the cross-sectional area of the wastewater interceptor. Figure 16.1 illustrates a typical air jumper and siphon.

E. Calculations: Submit hydraulic calculations as part of the CDR that demonstrate sufficient velocity of the inverted siphons for all phases of the development from initial conditions to buildout conditions.

16.15 Trenchless Technologies

A. General: The COS standard is open cut trench installation; however, where open cut trenches are not feasible, micro-tunneling, boring, and jacking will be considered on an individual basis.

B. General: The COS standard is open cut trench for buried pipe installation, as such the use of trenchless technologies must be justified by the Engineer during the CDR phase with a description of conflicts and site constraints, as well as economic constraints that indicate the need for trenchless technology.

C. Approval: The COS Public Works Director must issue written approval during the CDR for projects where trenchless technology is proposed.

D. Provide locations of proposed boring/jacking pits or micro-tunneling shafts with the CDR as well as a separate evaluation of trenchless technologies that includes the following:

1. Summary of regional geology with description of anticipated geological conditions.

2. Summary of existing utilities with vertical and horizontal locations of each.

3. High and low groundwater elevations and water quality data.

4. Evaluation of horizontal directional drilling, micro-tunneling, and conventional tunneling.

5. Evaluation of viable pipe materials, which is coordinated with requirements of Chapter 5.

6. Illustration of proposed vertical and horizontal alignment.

7. List of agencies and utilities with specific requirements, which include but are not limited to railroads, ADOT, APS, and CAP.

8. Summary of recommendations that include selected pipe material.

E. Jacking pits and micro-tunneling shaft locations, depths, and dimensions must be provided as part of Final Design documents.

16.16 Marking Tape and Marker Balls

A. Provide marking tape and marker balls in accordance with Chapter 7 of the EDS.

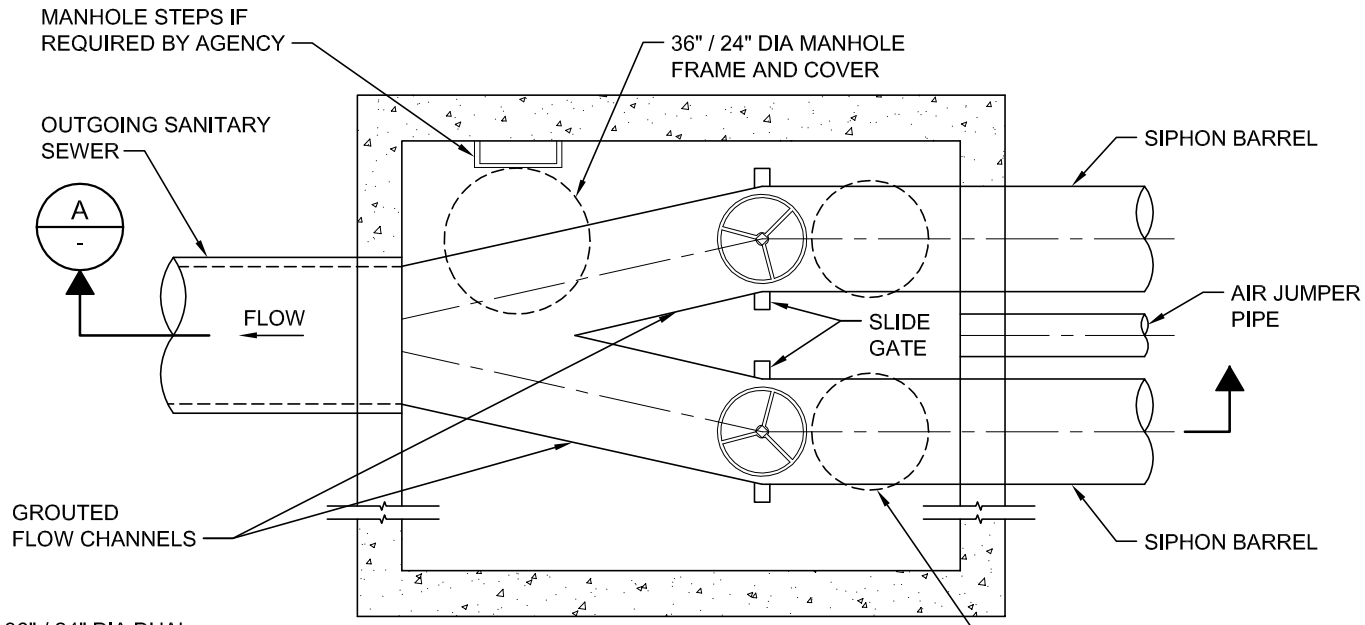

PLAN (TOP REMOVED)

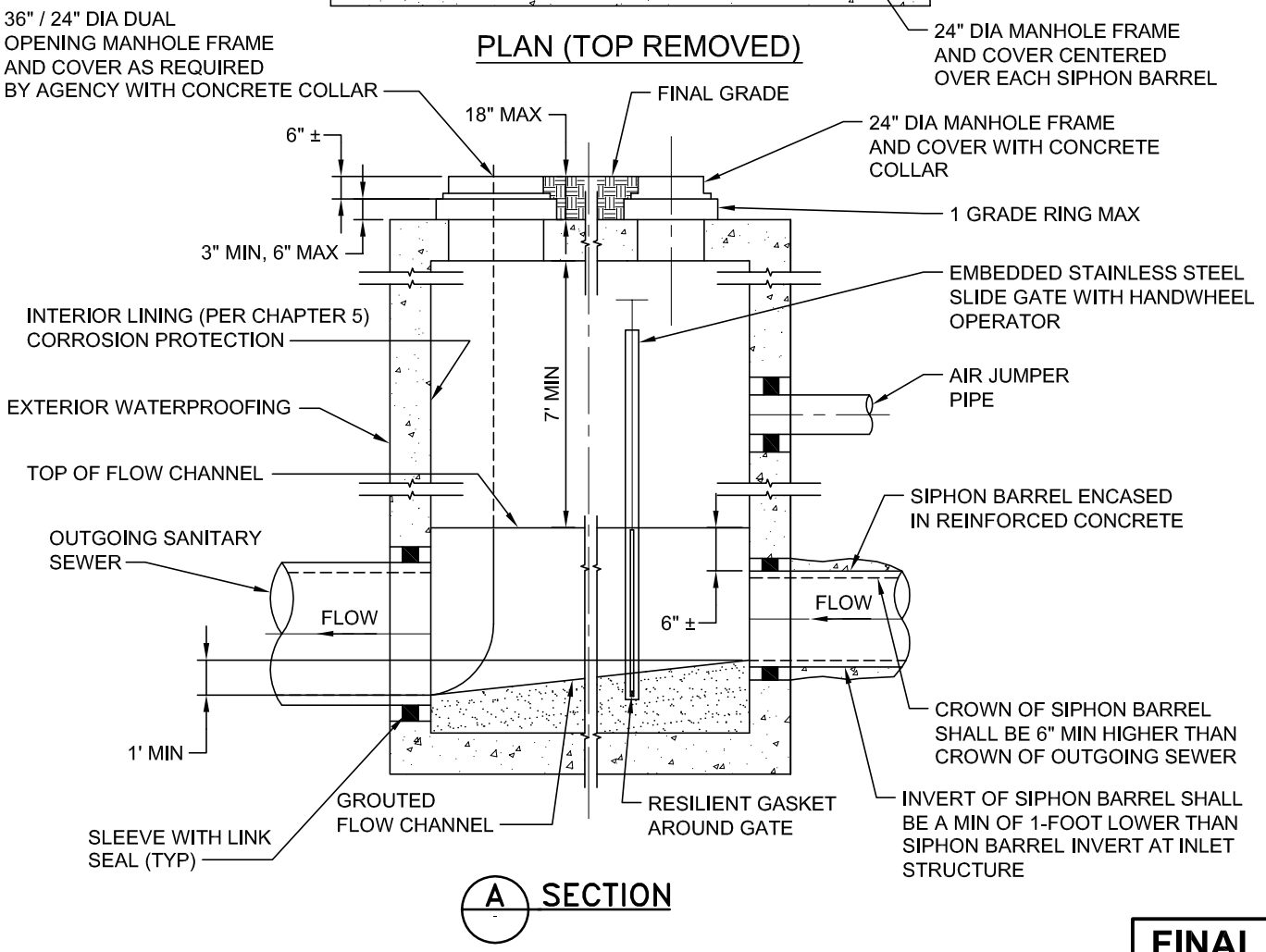

A - SECTION

FINAL

REVISIONS	DWN	APVD	APVD	DATE

CITY OF SURPRISE

Maricopa County, Arizona

Water and Wastewater Guidelines

DESIGNED JBR
DRAWN ARE
CHECKED
APPROVED
APPROVED
DATE APRIL 2011

SURPRISE ARIZONA

TYPICAL SIPHON OUTLET STRUCTURE

SCALE

FIGURE	REV.
16.1A	0

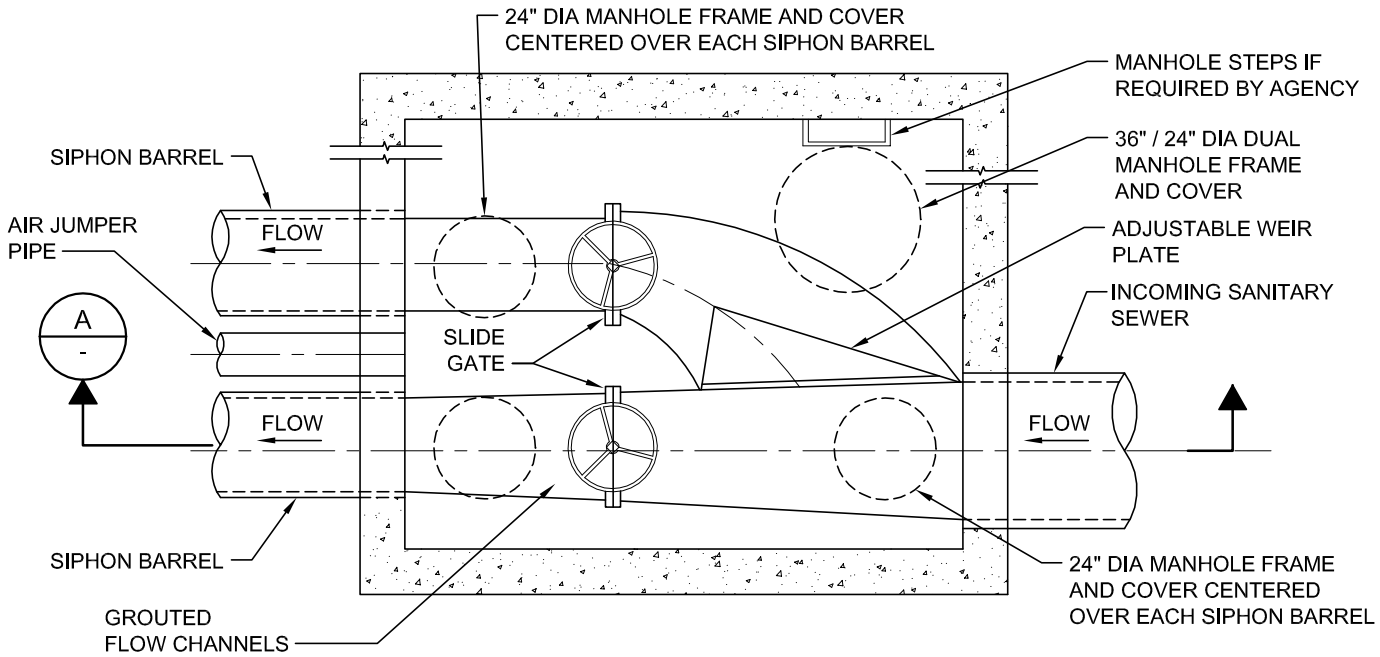

PLAN (TOP REMOVED)

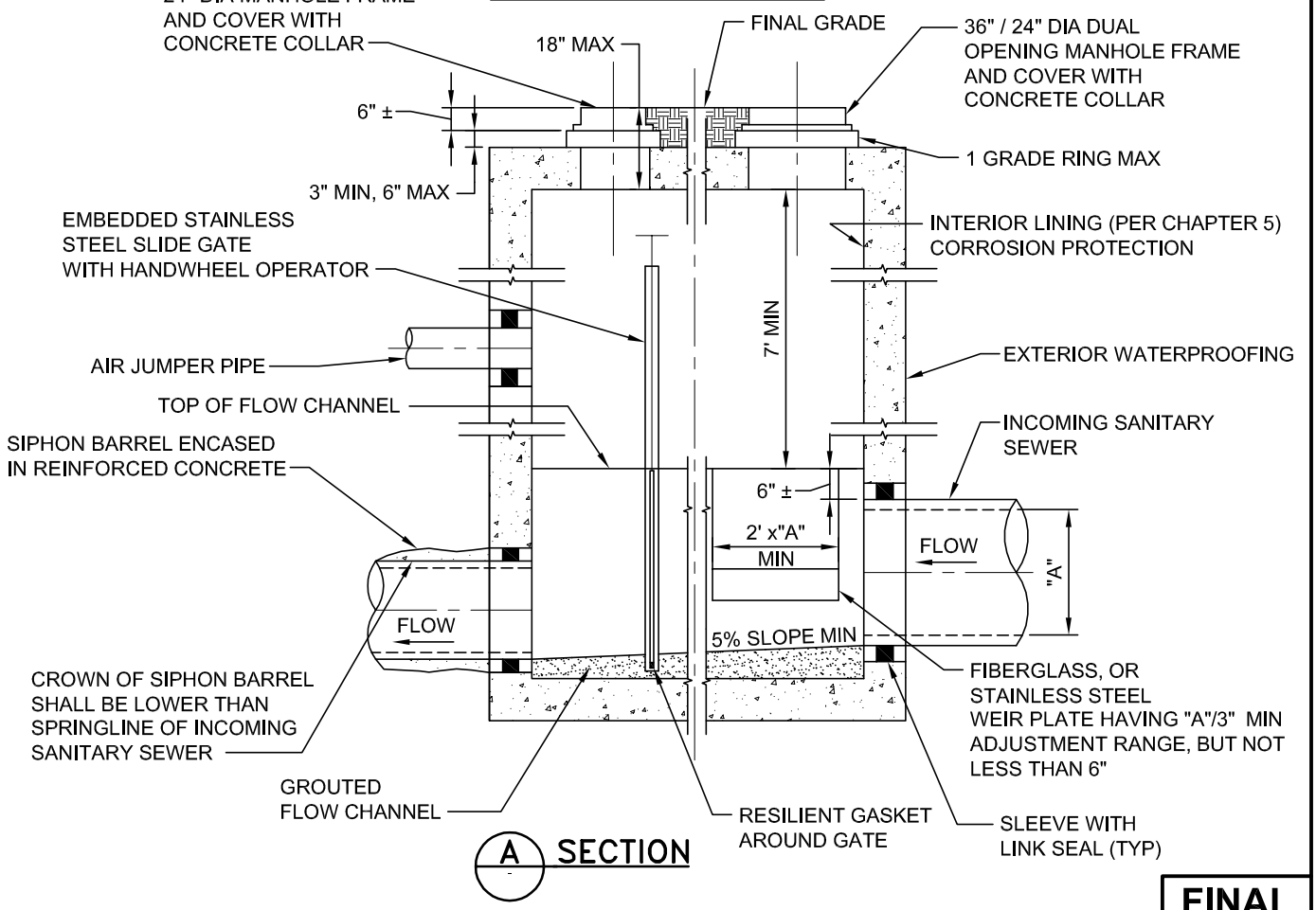

A SECTION

FINAL

REVISIONS	DWN	APVD	APVD	DATE

CITY OF SURPRISE

Maricopa County, Arizona

Water and Wastewater Guidelines

DESIGNED JBR
DRAWN ARE
CHECKED
APPROVED
APPROVED
DATE APRIL 2011

SURPRISE ARIZONA

TYPICAL SIPHON INLET STRUCTURE

SCALE

FIGURE	REV.
16.1B	0

CHAPTER 17 WASTEWATER LIFT STATIONS

17.01 General

A. The intent of this chapter is to provide guidelines for the design of wastewater lift stations.

B. These guidelines presented in this chapter apply to lift stations with a peak hour pumping capacity up to approximately 2 mgd, with total dynamic head (TDH) of not more than approximately 160 feet. Lift stations, with capacity and/or TDH higher than the flow and TDH limits, are considered special designs not addressed by this chapter.

C. For the flow and TDH limits stated above, this chapter assumes that the proposed lift station will be a submersible lift station with 2 or more pumps installed in a concrete wet well, and a buried valve vault with discharge piping.

D. Factory-Built Systems: The COS accepts that wastewater lift stations in the sizes covered by these guidelines may be factory-built systems. The lift station, valve vault, electrical panels, control panels, and discharge piping may be assembled at the factory and shipped to the site to be installed by the contractor, who assumes responsibility for providing a functional facility with all associated piping, electrical, and controls.

E. The Engineer is responsible to provide materials, linings, and coatings suitable for a corrosive environment in accordance with Chapter 5.

F. In accordance with Chapter 7 of the Surprise EDS, public wastewater lift stations are discouraged and are allowed only under unusual circumstances with the prior written approval of the COS Public Works Director or designee. If a lift station is found to be required, refer to the EDS for project financing requirements and associated responsibilities.

17.02 Concept Design Review (CDR) Phase

A. General: The project shall be summarized and presented in a CDR report. The report will be submitted to the COS for review and acceptance. A CDR is required for any wastewater facility considered in this document, regardless of the project size or complexity. The CDR is the basis for the ensuing design process and must be presented in a fashion that allows the reader to gain a thorough and complete understanding of the necessity of the project. Without an approved CDR, the Engineer will not receive COS approval to proceed with final design.

B. Prepare a CDR with the items below and all design calculations supporting decisions and/or recommendations. The report will be submitted to the COS for review and acceptance. Submit the items below and other applicable items to support the CDR to the COS for review and approval:

1. Executive Summary.
2. Table of Contents.
3. The project background.
4. Existing conditions including, but not limited to, existing utilities and a list of major stakeholders with contact information for each.
5. Summary of utility conflict information, including pothole information or recommendations for utilities proposed to be potholed.
6. Topographic mapping information summary, per Chapter 2.
7. Draft Geotechnical Investigation Report, per Chapter 3.
8. Draft Environmental Investigation Report, per Chapter 1.
9. Draft Corrosion Control/Cathodic Protection Report, per Chapter 5.
10. Preliminary Drainage Report, per Chapter 2.
11. Summary of the applicable drainage and traffic study findings with references to those documents submitted separately.
12. Description of pump selection to include at a minimum:
    a) Summary of wastewater source(s) to be pumped.
    b) Technical selection criteria including operational scenarios of wet well volume, pump cycle time, flow, and TDH for selected pumps.
    c) Expandability features of facility including number of pumps, impeller size to accommodate range of flows for current and throughout all phases of expansion.
    d) Cost considerations including capital costs and operating costs.
    e) Description of operability issues.
    f) Summary of constructability issues.
    g) Recommendation of pump type and configuration, including the motor horsepower and impeller diameter.
    h) Table that summarizes the pump design criteria, including design head, design flow, motor horsepower, and pump design efficiency.

13. Flow monitoring data, if available.

14. Preliminary drawings (30 percent design drawings) illustrating:
    a) Property ownership, right of way, and easement information.
    b) Proposed grading and civil site improvements.
    c) Site access for maintenance.
    d) Electrical single-line diagram.
    e) HVAC schematic.
    f) Preliminary P&IDs.
    g) Proposed offsite improvements where applicable.
    h) Force main plans and profiles.
    i) Plans with dimensions to indicate equipment locations.
    j) Major sections indicating pipe centerline elevations.

15. Alternatives evaluation summary, if required.

16. Identification of appurtenant facilities and spacing criteria, including preliminary design of odor control facilities and noise attenuation.

17. Project considerations such as:
    a) Equipment procurement.
    b) Project schedule, which includes design, bidding, and construction.
    c) Stakeholder impact, which includes public and private entities.

18. Identification of any permanent and temporary ROW/easement constraints and acquisition needs.

19. Matrix summary of permits to be obtained and preliminary schedule for submittals and approval.

20. List of agencies, stakeholders, and utilities to review and sign the drawings.

21. Outline of technical specification sections and list of final design drawings.

22. Preliminary quantities and associated cost estimates.

23. Preliminary construction schedule.

24. Project correspondence file, including meeting minutes.

25. Inventory of existing facilities and improvements.

26. Graphics, detail sketches, tables, and other displays to support analyses and recommendations.

27. List of relevant reports, plans and maps reviewed, and other relevant project information.

28. Work plan for how construction is to be accomplished if connecting into existing facilities (phasing, shutdowns, etc,).

29. “Line of Sight” study for PLC/Radio Control (if requested).

30. Preliminary description of station operational scheme and controls, to include communication with SCADA.

31. Preliminary description of architectural features for structures and perimeter walls.

17.03 Agency and Utility Coordination

A. The Engineer shall initiate contact and coordinate efforts with outside utilities and agencies in accordance with Chapter 1.

17.04 Final Design Phase

A. General: The Engineer shall provide a Final Design with progress submittals to the COS at 60 percent and 90 percent level of completion in accordance with Chapter 1, which builds upon work completed during the CDR. The Final Design shall include:

1. Final design drawings.

2. Final specifications.

3. Final drawings and specifications shall meet the general requirements presented in Chapter 1.

4. Details of security features in accordance with the current COS Security Master Plan.

5. Final Cost Estimate.

6. Final versions of all studies and reports submitted with the CDR.

17.05 Design Flows

A. Wastewater Generation Rates: The Engineer shall meet with COS personnel to discuss the initial and ultimate hydraulic and organic loading

for the proposed lift station. Sources of flow and land uses must be identified and overall project phasing must be established.

B. Wastewater Flows: For existing areas, coordinate with the COS for flow data. Where flow data are not available, collect flow data or estimate minimum, average, maximum daily ,and peak hour flows as described in Chapter 16, Section 16.05.

C. Include flow component if appropriate for infiltration and stormwater as described in Chapter 16, Section 16.05.

17.06 Hydraulic Analysis

A. General: The Engineer is required to develop hydraulic models of the service area as part of the CDR. Hydraulic models must incorporate information from the City regarding the existing wastewater collection system in accordance with Chapter 16, Section 16.07 and as described herein.

B. Hydraulic analysis is required for all new facilities and modified facilities, which includes the following:

1. Pump replacement.

2. Modifications to pumping capacity, pump control, and operation adjustment.

3. Significant changes in total dynamic head (TDH), and check valve/control valve closure time adjustments, etc.

C. Extended Period Simulation (EPS) Analysis: An extended period simulation (EPS) hydraulic model of the service area and proposed service area is required to demonstrate how the proposed facilities respond to daily peaks and minimum flows throughout initial and buildout conditions for the service area.

D. Steady State Analysis: The Engineer shall perform a steady-state hydraulic headloss analysis of the pumping and force main system to determine the TDH requirements of the lift station. TDH calculations shall be made for new facility designs and existing facility modifications. The Engineer shall:

1. Determine pumping head requirements, TDH system curves, flow velocities, and travel times.

2. Establish minimum and maximum static head.

3. Provide recommended pumping rates.

4. Determine pipe class rating.

5. Establish maximum allowable shutoff head.

6. Use Darcy-Weisbach or Hazen-Williams equations.

7. Provide a list of friction factors for typical pipe materials.

E. Modeling Results Summary: Summarize results of modeling as part of the CDR and include a table that shows the average, peak, and minimum hour flow rates for each proposed project phase. The modeling results will be used by the Engineer to determine the type and size of pump equipment, odor control, wet well, and other facilities necessary for efficient pump operation during the normal starting and stopping of the pumps, and during electrical power failures.

17.07 Pumping Capacity

A. Lift stations will be designed with consideration of the station's design peak inflow, as well as the design minimum inflow, for both the current and future conditions. The firm capacity of the lift station is the total pumping capacity of the station (design peak inflow), with the largest pump out of service at maximum static differential levels.

B. Minimum requirements (design criteria) for lift stations are included herein. The COS accepts the use of factory-fabricated package lift stations utilizing submersible wastewater pumps for the size ranges noted at the beginning of this chapter. Non-factory fabricated package lift stations will be considered on a case-by-case basis. Main pumping equipment shall be specially selected for individual application/service. At a minimum, all lift stations shall be equipped with two (2) pumps and have the capability of automatically alternating the pumps from lead to standby. With two pumps furnished, each pump shall be capable of pumping the design peak inflow determined for the station as follows:

Design Peak Inflow = PF X Calculated Peak Inflow

Where:

Design Peak Inflow = Pumping capacity of each pump, gpm

Calculated Peak Inflow = Peak Influent Flow, gpm

PF = Peaking factor per IWMP or current flow data.

17.08 Wet Well Design

A. Flow Data: Establish wastewater flows and pumping capacity per the aforementioned sections. Provide a table of flow data for the wastewater collection system that discharges into the wet well.

B. Wet Well Materials: Provide an FRP or reinforced concrete structure as follows:

1. Rated for anticipated dead and live loads, which include seismic as well as vehicle traffic and soil loads in accordance with Chapter 4.

2. Providing protective lining and coating systems and materials suitable for a corrosive environment as recommended by a corrosion engineer and in accordance with Chapter 5.

3. FRP structures are not allowed in roadways or where vehicle traffic is anticipated.

4. PVC lining of concrete structures is not allowed.

C. Wet Well Inlet: The wet well inlet shall be designed in accordance with ANSI/HI 9.8 Pump Intake Design Standard for Solids-Bearing Liquids. The wet well inlet pipe invert shall be above the high water operating level, and the inlet shall be designed to minimize turbulence and odor generation, with no free fall discharge into the wet well under any operating condition. Wet well inlet shall include an external drop inlet with means to bypass the wet well, and a manhole designed to catch rocks and other debris, generally as shown on Figures 17.1, 17.2, and 17.3.

D. Wet Well Operating Volume: Total wet well operating volume is defined as the volume between the all pumps stop level and the all pumps start level. The wet well operating volume and pump sequencing start/stop levels must:

1. Consider operation at all flows, which includes minimum inflow conditions through design peak inflow conditions.

2. Be small enough to minimize septic conditions and resulting odors at minimum flows.

3. Be large enough to provide a pump cycle time of at least 8 minutes to prevent overheating of the motor.

4. Limit pump starts to maximum of 10 per hour.

5. Include automatic alternation of lead and lag pumps.

E. Wet Well Sizing: The wet well shall be sized considering the following at a minimum:

1. An appropriate minimum flow factor will be used to size the wet well. The Minimum Flow Factor (the ratio of minimum to average flow for small wastewater service areas) less than 1 mgd average flow is approximately 0.2. The Minimum Flow Factor increases to approximately 0.3 for service areas having a flow greater than 2 mgd.

   (Minimum inflow) = (Average Dry Weather Flow) x (Minimum Flow Factor)

2. Therefore, the required wet well operating volume for the first pump to start is as follows:

   First Pump Wet Well Operating Volume = Pump capacity x 8 minutes/4

F. Wet Well Operating/Alarm Levels: The wet well high and low operating levels, pump sizes, impeller sizes, and the high and low alarm levels shall be shown on the design drawings for all phases of expansion, current and future. The pump automatic shutoff level shall allow for sufficient net positive suction head based on the selected pump. Submergence of the pump suction bells shall be in accordance with the Hydraulic Institute Pump Intake Design Standard, and the pump manufacturer's requirements.

G. Emergency Storage Volume: The emergency storage volume allows operating and maintenance personnel time to respond to a station alarm and/or to perform emergency repairs to correct a failure condition. In addition to the wet well operating volume, the Engineer shall:

1. Demonstrate that the wet well and system upstream of the pumps has a volume that can accommodate 2 hours of storage at design peak inflow.

2. Review electrical utility records, if available, for frequency of power outages in evaluating the emergency storage volume.

3. Define the total storage volume (i.e., the volume of the wet well above the pump "off" level to the lowest wastewater spill point upstream of the wet well) by using any combination of additional storage in the wet well above the operating volume, separate overflow tank, and storage in the inlet pipe up to the lowest spill level.

H. Storage in Influent Wastewater Collection System: Except as noted above for Emergency Storage Volume, the wet well influent pipe shall not be designed to accommodate wastewater storage during normal lift station operation. For example, normal lift station flows shall not require the use of influent lines for wet well storage.

17.09 Force Main Design

A. Capacity of Downstream Wastewater Facilities: The Engineer shall meet with the COS to verify that the wastewater collection system downstream of the force main discharge point has sufficient capacity (both current and future) to handle the increased flows. This investigation should go sufficiently far downstream to a point that the lift station flow component is not a significant factor. If sufficient capacity is not available, the project must include provisions to add the required capacity.

B. Multiple Force Main Considerations: A minimum velocity of 3 ft/s must be maintained at minimum flows. During force main sizing to accommodate both present and future flows, consideration should be given to the installation of multiple force mains as a method to control velocities in the pipe during initial phases of development. Combining smaller force main sizes for smaller flows and larger force mains for larger flows will allow higher velocities in each force main, thereby reducing potential solids deposition in the pipe and reducing the overall retention time.

C. Force Main Retention Time: The Engineer shall prepare calculations to determine the maximum retention time within the force main. The following calculations shall be prepared:

1. Min. Pump Run Time (MPRT) = 5 minutes = (First Pump Wet Well Operating Volume)/[(Pump Capacity) – (Minimum Inflow)]

2. Number of Cycles (for force main volume) = Force Main Volume / [(Pump Capacity) x MPRT]

3. Max. Wet Well Fill Time = (First Pump Wet Well Operating Volume) / (Minimum Inflow)

4. 1 Cycle Period = Max. Wet Well Fill Time + MPRT

5. Max. Retention Time = [Number of Cycles (for force main volume)] x (1 Cycle Period).

17.10 Site Civil

A. General: Provide a site design that conforms to general requirements for grading, setback, vehicle access, and stormwater management in accordance with Chapter 2.

B. Site Layout: Site grading shall preclude site drainage from gaining access to the lift station building. Adequate setback from property lines shall be provided in accordance with the Surprise Unified Development Code. Sufficient setback shall also be provided to allow for fill, cut, or fill transition to existing contour elevations at property lines. A fill or cut slope of 4:1 or flatter is required, unless specifically approved otherwise. A typical lift station site layout is shown on Figures 17.4 and 17.5.

C. The lift station shall be positioned and the site developed to ensure a uniform soil bearing condition. The footing and floor shall be placed on either native earth material or structural fill. The lift station shall not be situated where a portion of the station is on native material and a portion is on fill material. See Chapter 3 for Geotechnical Requirements.

D. Provide facilities that collect and retain stormwater designed in accordance with ADEQ and EPA requirements.

E. Service vehicle access to major station components shall be incorporated into the site layout. These service vehicles may include pickup trucks, vacuum excavator trucks, cranes, delivery vans, and chemical tanker trucks.

17.11 Signage

A. Each lift station site shall be identified with a sign mounted on the exterior of the masonry perimeter wall adjacent to the site access gates. Exact location will be determined by the site layout on a case-by-case basis.

17.12 Access Gates

A. Provide vehicle access gates and pedestrian access gates that meet or exceed security and vehicle access requirements described in Chapter 2, Section 2.10.

B. Provide separate access for utility power to read power meters in accordance with Chapter 7.

17.13 Security

A. At a minimum, an 8-foot tall masonry perimeter wall with locked entrance shall be provided around the site. The perimeter wall will:

1. Be compatible with the surrounding environment, including landscaping.

2. Satisfy all COS architectural and other Community Development requirements for appearance, colors, and coatings.

B. All other security issues shall be addressed by the Engineer, which include items described in the latest version of the most current COS Security Master Plan.

17.14 Mechanical Layout

A. General Station Layout: The Engineer shall work with the COS to establish a preliminary layout of the lift station. The layout shall address general room dimensions and use, including length and arrangement of station piping, location of valves, flowmeters, pumps, tanks, MCC panels, control panels, and major equipment.

B. At a minimum, all lift stations shall be equipped with two (2) pumps and have the capability of automatically alternating the pumps from lead to standby. Station equipment, piping, etc., shall be oriented in the station to provide convenient safe access for operation and maintenance, including the installation and removal of equipment. Typical wet well, valve vault, and building floor plan are presented in Figures 17.1, 17.2, and 17.3.

17.15 Noise Attenuation

A. General: Provide noise production studies and recommended noise attenuation in accordance with Chapter 11, Section 11.24.

17.16 Odor Control Facilities

A. Odor control measures shall be provided for all lift stations. Odor control may also be required for influent wastewater collection lines and discharge force mains.

B. Liquid Phase Odor Control Systems:

1. Liquid sodium hydroxide (caustic), liquid sodium hypochlorite (bleach), and liquid calcium nitrate type system designed to oxidize sulfides and volatile organic in the wastewater to reduce odors.

2. Designed to directly deliver chemical to the wet well and/or a manhole upstream on the influent line.

3. The liquid phase treatment system will be sized for a 30-day on-site supply, and shall consist of storage tanks with secondary containment, along with associated peristaltic type metering pumps (duty + standby), controls, and piping.

C. Solid Phase Odor Control Systems:

1. Granular activated carbon (GAC) that is pelletized and chemically impregnated and formulated to remove the following:
   a) Hydrogen sulfide
   b) Volatile organics
   c) Mercaptans.

2. Utilizes GAC storage tank and centrifugal fan as well as stainless steel or FRP foul air piping or ductwork.

D. Vapor Phase Odor Control systems shall utilize a hydroxyl ion fog odor control system to oxidize the odors in the wet well and adjacent odorous spaces such as pipelines and manholes. Requirements for vapor phase odor control will be determined by the COS on a case-by-case basis at the beginning of design.

E. All storage tanks, equipment, piping, ductwork, and materials shall be suitable for anticipated service and corrosive conditions in accordance with Chapters 5 and 6.

F. Metering pumps and piping shall be in accordance with Chapter 6.

17.17 Vault Standards for Wastewater Lift Stations

A. General: The Engineer shall locate vaults in non-traffic areas whenever feasible. Structural design of vaults shall conform to the requirements of Chapter 4.

B. For access and maintenance, the COS requires the use of vaults for all buried valves used for wastewater service.

C. Vaults shall incorporate heavy-duty aluminum hatches with Type 316 stainless steel hardware, capable of withstanding H-20 loads imposed by traffic, heavy maintenance equipment, chemical delivery trucks, etc.

D. Vault entrance hatches shall provide a minimum clear opening of 36 inches in diameter complete with access ladder.

E. Drainage: Vaults shall be designed to drain to a sump equipped with an 18-inch deep sump with an exterior 120 VAC/60 Hz/1 Ph ground fault circuit interrupter receptacle to be used for a portable sump pump.

F. If the design will result in “confined space” regulations and associated safety issues, the Engineer shall obtain concept approval prior to completing the design.

G. Flowmeter Considerations: Vaults equipped with flowmeters shall be:

1. Sized with sufficient upstream and downstream straight runs of pipe to maximize meter accuracy.

2. Provided with manual isolation valves that can be operated without the need to enter the vault.

3. Equipped with exterior aboveground panel adjacent to the vault with visual reading of flowmeter in units of gallons per minute or million gallons per day as determined by the COS.

17.18 Wastewater Pumping Systems Design

A. System Responsibility: In general, the Engineer shall include in its project design, specifications requirements for the pump, drive motor, supports, Type 316 stainless steel rails, constant speed equipment, and specific controls and appurtenances to be provided by a single manufacturer/ supplier who shall take unit responsibility for the entire system.

B. Pump Inlet Configuration: The pump inlet shall be designed in accordance with the ANSI/HI Standards to minimize turbulence.

C. Equipment Access: In general, pumps, lifting chains, level controls, access hatches, etc., shall be arranged to provide safe and convenient access for operation, maintenance, equipment installation, and equipment removal.

D. Expandability: Lift station expandability will be evaluated on a case-by-case basis. If a lift station is planned to be expanded in the future, the Engineer shall ensure that adequate space is provided to accommodate future equipment. The discharge piping manifold shall be sized for future flows. Pumps shall be selected to provide stable and efficient operation throughout the range of both current and future operating conditions provided by the wet well.

E. Bypass Pumping Feature: Provide vertical suction piping that extends from the bottom of the wetwell to the top of the lift station with quick disconnect or blind flange as well as wye connection with isolation plug valve on

discharge header (Figures 17.1, 17.2, and 17.3) to allow bypass pumping via a diesel-engine, self-priming pump in the event of a power outage, or if pumps are otherwise not operational. Size piping for anticipated peak flow at buildout.

17.19 Piping Systems

A. On-Site Piping: Lift station piping shall be arranged in accordance with the following requirements:

1. Engineer shall specify accessories and manufacturers as provided in the current COS Preferred Equipment List.

2. Individual pump discharge, header, and force main piping shall be designed to ensure a velocity of between 4 and 10 fps.

3. Check Valves: Flanged swing check valves with outside lever, suitable for use in raw wastewater equipped with the following:
   a) Mechanical disc position indicator, which has continuous contact with the disc under all flow conditions.
   b) Screw type backflow actuator to allow opening of valve during no-flow conditions.
   c) Epoxy coating and polyurethane lining.

4. Isolation Valves: Flanged eccentric plug valves.

5. Flowmeter: Flanged magnetic flowmeter In accordance with Chapter 8.

6. Air Vacuum/Air Release Combination Valves: Shall be in accordance with latest approved materials list.

7. Provide pipe, valves, and fittings for an alternative pump discharge header and pig launching station above the valve vault. General configuration shall be as shown on Figures 17.1, 17.2, and 17.3.

8. Onsite wastewater piping shall be epoxy-lined ductile iron pipe with flanged joints in the wet well and valve vault, and mechanical joints for buried piping.

9. Pipe Lining Repairs: The Engineer shall include in project specifications a detailed procedure for field repair of epoxy linings that are damaged during the construction process. The COS or designee shall be given at least 2 working days advance notice that repairs are complete and the piping is ready for inspection. Piping cannot be closed up until inspection is completed.

10. Joint restraint shall be accomplished by the use of flanged or restrained mechanical joints, or harnesses for flexible couplings. Patented joint restraint methods may be considered by the COS if the application fits the recommended use and design data from the joint restraint manufacturer.

11. Odor Control and Chemical Piping shall be furnished and installed in accordance with equipment manufacturer's recommendations, and the requirements of Chapter 6. Allowable materials include PVC, CPVC, and polyethylene tubing inside a PVC sleeve for chemical feed piping, and CPVC or FRP ducts for odor control.

17.20 Force Mains

A. Materials: Force mains shall be polyurethane-lined ductile iron pipe designed in accordance with AWWA M41 or DIPRA's Design of Ductile Iron Pipe for all force main sizes.

B. Pipe Lining Repairs: The Engineer shall include in project specifications a detailed procedure for field repair of polyurethane linings in ductile iron pipe that are damaged during the construction process. The COS or designee shall be given at least 2 working days advance notice that repairs are complete and the piping is ready for inspection. Piping cannot be closed up until inspection is completed.

C. Marking tape shall be provided for location of buried force mains in accordance with Chapter 7 of the EDS.

D. Joints: Joints for force main pipe and fittings shall be mechanical joints or restrained push-on joints for all underground piping. Aboveground piping shall be flanged.

E. Joint Restraint: Provide joint restraint at all tees, bends, valves, and pipe terminations. The Engineer shall provide calculations for restraint length, using formulas approved by the DIPRA. Approved methods of joint restraint include restrained mechanical joints and restrained push-on joints as manufactured by US Pipe (TR-Flex), Pacific States (Perma-Lock), and American (Flex Ring or Lok Ring).

F. Minimum Depth: The minimum depth of bury for force mains shall be 5 feet, subject to profile design as described below.

G. Profile Design: The Engineer shall design the profile of the force main to specific slopes to keep the number of high and low points to an absolute minimum, and to provide the required clearances from other utilities as

specified by the ADEQ, MCESD, COS, and other utility owners. High points shall be equipped with automatic combination air vacuum/air release valves, as noted above. Low points shall be equipped with manually operated pump-out connections. Since high and low points in force mains represent potential locations of odor release, the Engineer shall designate their locations as a part of the CDR for review and concurrence by the COS.

H. Force Main Discharge Design: Except where specifically approved otherwise, force mains shall terminate in a dedicated manhole before wastewater flows into the gravity wastewater collection system. The force main shall be brought into the manhole and piped to a shaped manhole invert that directs the flow in the direction of the wastewater flow. Design of the manhole and force main connection shall keep turbulence in the incoming and outgoing wastewater stream to a minimum to avoid release of odors from the manhole. Preliminary details of the discharge manhole shall be included in the CDR.

17.21 Pumps

A. General: The Engineer shall specify submersible pumps suitable for pumping raw, untreated, unscreened municipal wastewater in a corrosive environment capable of passing a 3-inch sphere without clogging.

B. Pump construction shall be two-piece pump and motor casing as follows:

1. Motor case and seals watertight to submerged depths of up to 65 feet.

2. Constructed from ASTM A 48, minimum Class 35 cast iron.

C. Impellers shall be multi-vane, non-clog design constructed of ASTM A 48 cast iron with hardened impeller vane leading edges.

D. Pump shafts shall be Type 431 stainless steel, designed to withstand 1.5 times the maximum operating torque.

E. Bearings shall be permanently sealed, grease lubricated, anti-friction type that meet the ABMA standards and shall be designed as follows:

1. Lubrication system designed to absorb heat energy generated in bearing under maximum ambient temperature.

2. Bearing life shall be not less than 24,000 hours at bearing design load imposed by pump shutoff at rated speed or L10 life of

50,000 hours in accordance with ABMA standards at rated design point.

F. Shaft seals shall be positively driven, rotating tungsten carbide rings with the following features:

1. Oil chamber lubrication with air volume to mitigate oil expansion due to temperature variations with standard drain and inspection plug.

2. Will not require pressure differential to affect sealing.

3. Will not rely on pumped media for lubrication.

4. Capable of dry (unsubmerged) pump operation for extended periods.

5. Springs and other hardware shall be Type 316 stainless steel.

G. Discharge base and elbow shall be constructed of same material as pump casing and shall be:

1. Able to firmly support guide rails, discharge piping, and pumping unit.

2. Equipped with integral support legs with anchors to floor.

3. Provided with discharge interface that is self-aligning without entering the wet well and also provides a watertight seal by means of machined metal-to-metal contact.

H. Guide rails, brackets, and lifting chain shall be constructed of Type 316 stainless steel with the following features:

1. Dual pipes or rails that extend from discharge base to upper bracket.

2. Sized to fit discharge base and sliding bracket of pump.

3. Integral, self-aligning, guide rail sliding brackets that seal pump to discharge base.

4. Upper guide rail bracket.

I. All bolts and associated hardware shall be Type 316 stainless steel.

J. Drive Equipment: Lift stations that pump to a gravity wastewater collection system via force mains shall be provided with constant speed motors with across the line starters for motor sizes under 20 horsepower, and soft start/soft stop starters for motor sizes 20 horsepower and larger.

K. Acceptable manufacturers are as provided in the COS Preferred Equipment List.

L. Provide the following spare parts:

1. Thrust bearing set.
2. Radial bearing set.
3. Upper and lower mechanical seal set.
4. Casing seal gaskets or O-rings.

17.22 Pump Motor

A. General: Motors shall comply with requirements of Chapter 7.

B. Pump motor shall be dielectric oil filled or liquid cooled single phase, Class F, NEMA L design and shall be:

1. Suitable for 230 V or 460 V, 3 Phase, 60 Hertz.
2. Mounted in a sealed submersible housing with stator, rotor, and bearings.
3. Suitable for continuous operation at ambient temperature for the project at site altitude.
4. Capable of continuous operation under load with the motor submerged, partially submerged, or exposed without derating the motor.
5. Equipped with cooling system with jacket that encircles the stator housing for dissipation of motor heat in a closed loop system.
6. Equipped with stators securely held in place with a removable end ring and threaded fastener to be easily removed in the field and must be capable of being repaired or rewound by a local motor service. No special tools shall be required for pump or motor. Stator windings shall have Class F insulation (suitable for 155 degrees Celsius or 311 degrees Fahrenheit).
7. Enclosed in a housing with rotor, stator separated and protected from the pumped liquid by an oil-filled seal housing, which incorporates two sets of carbon ceramic mechanical seals mounted in tandem.

8. The mechanical seal housing shall be equipped with two moisture-sensing probes, which shall be automatic and continuous.

9. The sensor probes shall be electrically isolated with a resistor between each probe to eliminate grounding to the casing.

10. Equipped with thermal protection, which shall be low resistance, bi-metal disc that is temperature sensitive that annunciates to SCADA, designed as follows:
    a) Sensor shall be mounted directly in the stator and sized to open when stator temperature exceeds 120 or 130 degrees Celsius and automatically reset at 30 or 35 degrees Celsius differential.
    b) Sensor shall be connected in series with the motor starter coil such that the starter is tripped if a heat sensor opens. The motor starter shall be equipped with overload heaters so all normal overloads are protected by external heater block.

11. Equipped with moisture detection, which shall be a sensor in the seal chamber or motor housing that annunciates to SCADA.

17.23 Heating, Ventilation, Air Conditioning (HVAC)

A. General: Provide HVAC systems for all electrical rooms, occupied spaces, and mechanical rooms, which meet requirements of Chapter 9.

17.24 Standby Power

A. General: Each lift station shall be furnished with an emergency standby power generator with fuel capacity and an automatic transfer switch in accordance with Chapter 7. Coordinate location, layout, and enclosures with site design per Chapter 17, Section 17.10.

B. The generator and switch shall be sized to operate the lift station facility including the pumping units at the station's maximum rated or firm capacity. In addition, for lift stations with two installed pumps the generator shall be sized to operate both pumps simultaneously.

C. The generator shall be pad-mounted and located inside a soundproof enclosure suitable for outdoor service. Access requirements for the generator shall be in accordance with the generator manufacturer's requirements.

D. The automatic transfer switch shall be provided by the generator manufacturer and designed to work in conjunction with the generator to provide relays for all modes of operation and alarms.

E. Fuel source for the generator shall be natural gas, if available, or diesel connected directly to the utility service main.

F. The generator shall meet the noise requirements of Surprise Unified Development Code.

G. The generator control panel shall report the run status to the SCADA system.

17.25 Support Systems

A. Backflow Prevention: Provide approved backflow protection devices to avoid potential contamination. If the backflow prevention device is mounted adjacent to a wall, it shall be mounted a minimum of 24 inches away and no greater than 3 feet high to allow for maintenance. Provide backflow prevention for the following water sources:

1. Potable Water
2. Reclaimed Water.

B. Service Water: Provide for housekeeping and landscaping in accordance with the following:

1. Supply from potable water or approved reclaimed water source.
2. Provide an approved backflow prevention device.
3. Provide 3/4-inch hose bibs with vacuum breaker, galvanized or epoxy-coated steel hose rack with 50 feet of 3/4-inch rubber hose.
4. Provide a turbine meter located on the exterior of the site perimeter wall.

C. Drain System: Provide floor drains, hub drains, and floor sinks for drainage of air relief valves, seal water, condensate, and housekeeping as follows:

1. Sanitary sewers shall be gravity type with minimum slope of 0.007 ft/ft.
2. Drain piping shall be PVC or cast iron.

3. Provide cleanouts and vents in accordance with currently adopted plumbing code.

4. Discharge to sanitary sewer in a manner that is compliant with currently adopted codes.

5. Sump pumps, where required, shall be duplex type submersible and equipped with the following:
   a) Ductile iron or PVC discharge piping.
   b) Type 316 stainless steel lifting chain.
   c) Discharge check valve.
   d) Float level controls.
   e) High water level alarm will annunciate to SCADA.
   f) Aluminum grating or treadplate cover.

D. Telephones and Communications: Provide telephone board and appropriate size and number of conduit for telephone and security wiring in accordance with the following:

1. Conduits shall be extended to suitable junction box outside the pump station facility.

2. Submit approved telephone company drawings as part of project as-built drawings.

3. Coordinate design with current COS Security Master Plan.

E. Freeze Protection: Provide heat tracing and insulation for water piping less than 4 inches in diameter and/or chemical piping located outdoors that is subject to freezing temperatures in accordance with the following:

1. Heat Tracing: Suitable for 120 VAC/60 Hz/1 Ph power, equipped with a controller and designed to maintain the desired temperature for a useful life of 20 years. Heat tracing shall be in accordance with IEEE P515 - Testing, Design, Installation, and Maintenance of Electrical Resistance Heat Tracing for Industrial Applications and IEEE 622 - Design & Installation, of Electric Heat Tracing.

2. Pipe Insulation: Closed cell, elastomeric foam insulation suitable for temperatures of 0 degrees Fahrenheit to 220 degrees Fahrenheit. Provide UV resistant.

F. Other Support Systems: Systems not specifically addressed herein may be required and will be evaluated by the COS on a project-specific basis.

17.26 Fire Protection

A. Fire protection measures for lift stations shall be designed in accordance with COS, IBC, and IFC requirements.

B. Fire hydrant(s) shall be provided for fire protection in accordance with requirements of the COS EDS.

C. Fire sprinkler systems may be required for facilities with areas that exceed 5,000 square feet.

D. Fire alarm systems, which annunciate to SCADA are required for facilities with occupied spaces such as offices and control rooms.

E. Provide documentation of any fire sprinkler system waivers for electrical rooms as approved by the COS Fire Department.

17.27 Electrical and Instrumentation

A. General: All electrical equipment, instrumentation, control panels, and associated conduit and wiring shall be in accordance with Chapter 7 and shall be properly grounded with ring tongue terminals. Where appropriate, electrical facilities shall be intrinsically safe per NFPA 70 for arcflash and NFPA 820 Class 1, Division 1.

B. Provide arcflash labeling in accordance with NFPA 70.

C. Lockout Safety: Disconnects and circuit breakers shall be provided to safely de energize the panel and equipment using “lockout/tagout” procedures.

17.28 Controls

A. General: All control voltage shall be in accordance with Chapter 8 and accomplished by means of a power supply with a control fuse and on/off switch to protect and isolate control voltage from the line.

B. Control Strategy: The Engineer shall include a written control strategy as part of the design documents. The control strategy shall address anticipated operating and alarm scenarios, which include but are not limited to the following:

1. Pump operation in Hand, Off, Automatic.

2. Lead, Lag, and Standby pump operation.

3. Low wet well level alarm, which shuts off all pumps.

4. High wet well level alarm.

5. High high wet well level alarm, which also starts an available lag or standby pump.

6. Pump failure.

7. Power failure.

8. Generator.

C. Control Floats: Shall be provided for high high level alarm annunciation.

D. Level Measurement: Provide ultrasonic, non-contact type level measurement in accordance with Chapter 8. High-High float switch as described above.

E. Control Panel: A steel, NEMA 4X enclosure located inside the lift station building electrical room shall be provided for each control panel. In addition, control panels shall be:

1. Completely assembled at the factory and tested by the supplier.

2. Identified by a nameplate permanently affixed, which includes model number, voltage, phase, hertz, ampere rating, and horsepower rating.

3. Provided with red run light mounted in the exterior of the panel, with run light having an electrical life of 50,000 hours. One light per pump.

4. Provided with green lights for all alarms with an electrical life of 50,000 hours.

5. Equipped with hand-off-auto switch for each pump on the exterior of the panel. H-O-A switch shall be rocker type with an electrical life of 50,000 operations.

6. PLC in accordance with Chapter 8.

F. Duplex Pump Controller: An ultrasonic level sensor shall be used for pump control and alarm and shall:

1. Indicate level circuit operations utilizing red LED indicator lights with the LED light function shown on a permanent label on the pump controller.

2. Function to start/stop and alternate pumps.

3. Include a back-up start/stop circuit that is relay controlled and float actuated.

4. Include connectors and terminal blocks with box type lug connectors made of polyamide thermoplastic. Phenolic terminal blocks are not acceptable.

5. Include alternating circuit of the low voltage type and be operational from the transformer mounted on the pump controller board.

6. Utilize wiring with male header assemblies constructed of a corrosion-resistant thermoplastic material having a temperature range of -55 deg Celsius to 105 deg Celsius and copper alloy, bright acid tin over nickel-plating contacts.

7. Incorporate plug connectors for wiring of H-O-A switches, run lights, contactors, and overloads to the pump controller.

G. Power and Control Cords shall be water resistant 600 V, 60 deg Celsius, UL and/or CSA approved and applied dependent on amp draw for sizes. Additional requirements for the power cord are as follows:

1. Each individual lead shall be stripped down to bare wire, at staggered intervals, and each strand shall be individually separated.

2. Power cord entry into the cord gap assembly shall first be made with a compression fitting.

3. The cord gap shall be sealed with Buna N Rubber O-ring on a beveled edge to assure proper sealing where bolted to the connection box assembly.

4. Strain relief shall be provided, to keep the cord from being pulled out.

H. Surge protection shall be provided, which complies with ANSI C62.4-1, Category B and shall be installed in accordance with the manufacturer's instructions.

I. Circuit breaker shall be used to protect from line faults and to disconnect the pump from the incoming power. The circuit breaker shall be thermal magnetic air-type and sized to meet NEC requirements for motor controls.

J. Starter: Shall be solid state, reduced voltage type for all pumps 20 horsepower and larger, and across the line for pumps less than 20 horsepower. Magnetic starter shall include a contactor with a minimum mechanical life of 3,000,000 operations and a minimum contact life of

1,000,000 operations. The magnetic starter shall include an overload relay, which is ambient temperature compensated and bimetallic.

K. SCADA, alarms, and monitors shall be provided in accordance with Chapter 8 and include the following at a minimum:

1. When a high-level or low-level condition occurs, the alarm system shall activate the light and alarm horn located on the exterior of the building. The high-high float switch shall send an alarm signal to SCADA, as well as starting the pumps for a selectable length of time determined by wet well size and pump down time.

2. A push-to-test and push-to-silence button shall be provided.

3. A pump failure contact circuit shall be provided to activate the alarm and close dry contacts.

4. An overhead tripped indicator light shall be mounted on the enclosure door.

5. A heat sensor tripped light shall be mounted on the enclosure door.

L. Telemetry contacts shall be provided for additional high or low level as well as for motor overload, which shall indicate a visible alarm at the control panel.

M. Elapsed time meters shall be provided for each pump.

N. Seal Failure Indicators shall be provided for each pump, which shall indicate a visible alarm at the control panel and shall report to SCADA.

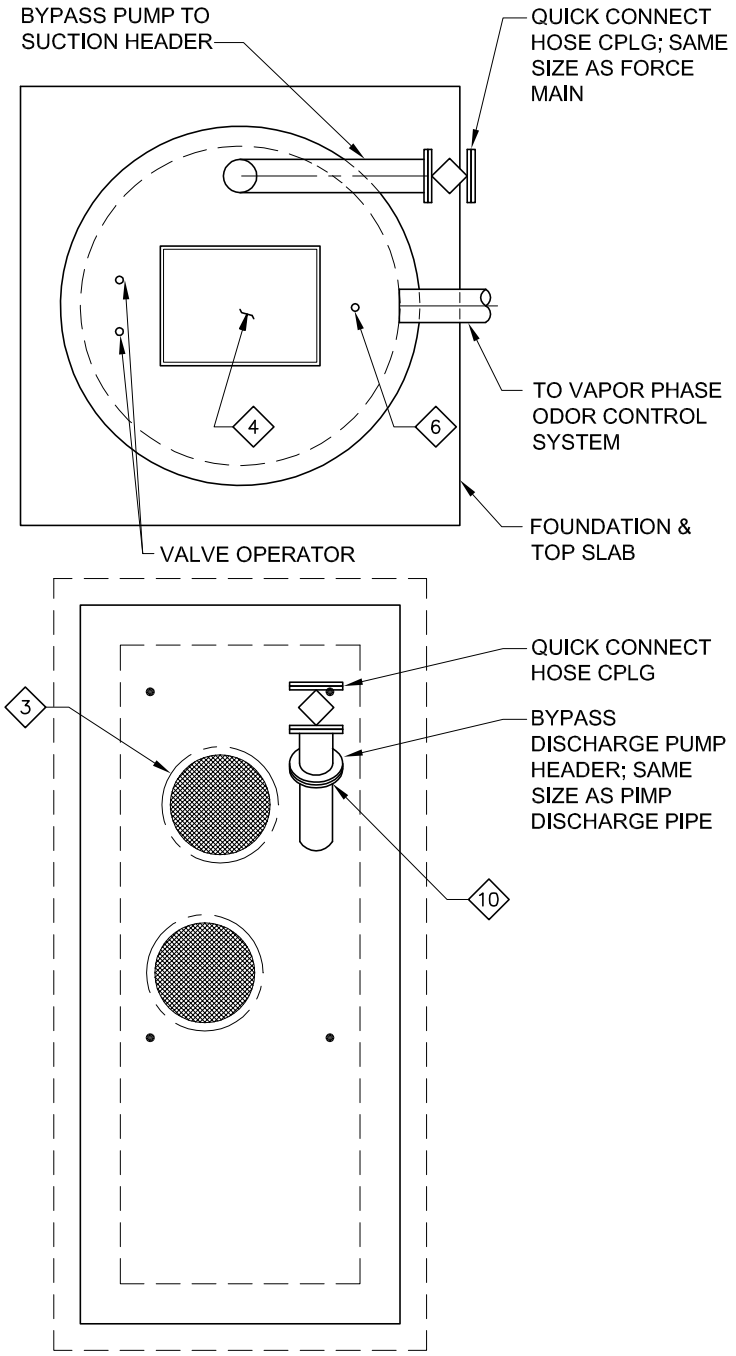

KEY NOTES

1. PIPE PENETRATION
2. ALL FORCE MAIN PIPING SHALL BE FLANGED. GROOVED JOINT OR RESTRAINED MECHANICAL JOINT WITHIN BOUNDS OF THE LIFT STATION
3. NEENAH HEAVY DUTY (DESIGNED FOR LL-H20) R-666301H W/ TYPE G HANDLE OR EQUAL
4. H20 RATING, SIZED TO ALLOW PUMP REMOVAL
5. PRESSURE GAUGE (0-150psi)
6. ULTRA SONIC LEVEL INSTRUMENT
7. ALL FORCE MAIN AND GRAVITY PIPING WITHIN THE BOUNDS OF THE LIFT STATION SHALL BE DIP POLYBOND LINED OR EQUAL.
8. REDUCER
9. 45° ELBOW UP
10. 45° ELBOW DOWN
11. REDUCER
12. WYE
13. PRESSURE SWITCH
14. MAGNETIC FLOW METER

LIFT STATION TOP PLAN

FINAL

REVISIONS	DWN	APVD	APVD	DATE

CITY OF SURPRISE

Maricopa County, Arizona

Water and Wastewater Guidelines

DESIGNED GS
DRAWN PAT
CHECKED
APPROVED
APPROVED
DATE APRIL 2011

SURPRISE ARIZONA

WASTEWATER LIFT STATION WET WELL & VALVE VAULT TOP – PLAN

SCALE NONE

FIGURE 17.1

REV. 0

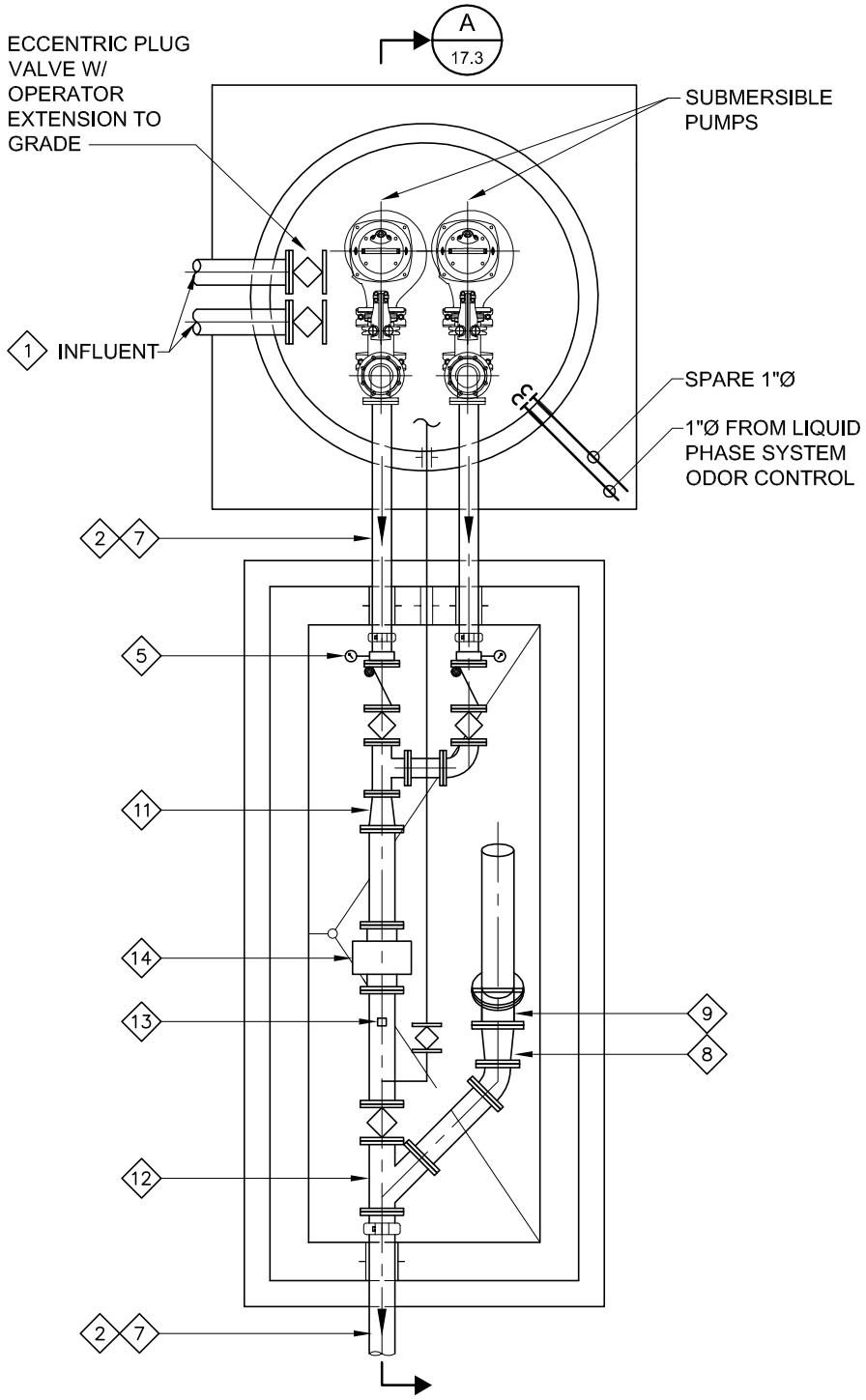

KEY NOTES

1. PIPE PENETRATION
2. ALL FORCE MAIN PIPING SHALL BE FLANGED. GROOVED JOINT OR RESTRAINED MECHANICAL JOINT WITHIN BOUNDS OF THE LIFT STATION
3. NEENAH HEAVY DUTY (DESIGNED FOR LL-H20) R-666301H W/ TYPE G HANDLE OR EQUAL
4. H20 RATING, SIZED TO ALLOW PUMP REMOVAL
5. PRESSURE GAUGE (0-150psi)
6. ULTRA SONIC LEVEL INSTRUMENT
7. ALL FORCE MAIN AND GRAVITY PIPING WITHIN THE BOUNDS OF THE LIFT STATION SHALL BE DIP POLYBOND LINED OR EQUAL.
8. REDUCER
9. 45° ELBOW UP
10. 45° ELBOW DOWN
11. REDUCER
12. WYE
13. PRESSURE SWITCH
14. MAGNETIC FLOW METER

LIFT STATION BOTTOM PLAN

FINAL

REVISIONS	DWN	APVD	APVD	DATE

CITY OF SURPRISE

Maricopa County, Arizona

Water and Wastewater Guidelines

DESIGNED GS
DRAWN PAT
CHECKED
APPROVED
APPROVED
DATE APRIL 2011

SURPRISE ARIZONA

WASTEWATER LIFT STATION WET WELL & VALVE VAULT BOTTOM PLAN

SCALE NONE

FIGURE 17.2

REV.

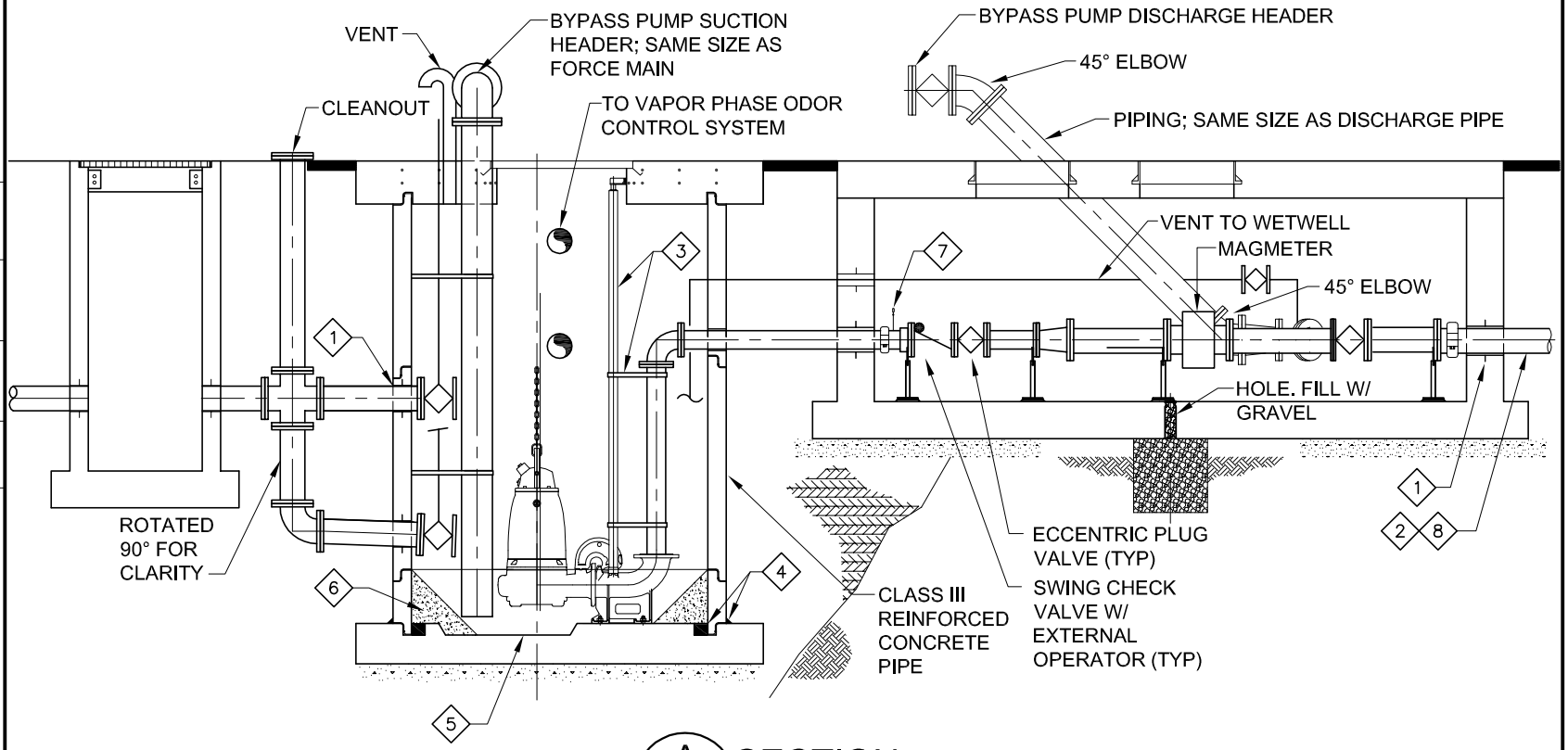

A SECTION 17.2

KEY NOTES

1. PIPE PENETRATION
2. ALL FORCE MAIN PIPING SHALL BE FLANGED. GROOVED JOINT OR RESTRAINED MECHANICAL JOINT WITHIN BOUNDS OF THE LIFT STATION
3. INSTALL SS GUIDE RAILS, LIFTING CABLE AND PIPE/RAIL SUPPORT IN ACCORDANCE WITH MANUFACTURER INSTRUCTIONS
4. PREFORM RECESS TO RECEIVE MANHOLE SEAL. SEAL RECESS WITH NON-SHRINK GROUT
5. RECESS CONC UNDER PUMP AS DIRECTED BY PUMP MFR, BUT NOT DEEPER THAN 4' W/O ENGR APPROVAL
6. 4000psi CONC TO DIMENSIONS PER PUMP MFR SPECS
7. PRESSURE GAUGE
8. ALL FORCE MAIN AND GRAVITY PIPING WITHIN THE BOUNDS OF THE LIFT STATION SHALL BE DIP POLYBOND LINED OR EQUAL

FINAL

CITY OF SURPRISE
Maricopa County, Arizona
Water and Wastewater Guidelines

SURPRISE ARIZONA

REVISIONS	DWN	APVD	APVD	DATE

DESIGNED GS
DRAWN PAT
CHECKED
APPROVED
APPROVED
DATE APRIL 2011

WASTEWATER LIFT STATION
TYPICAL LIFT STATION
SECTION

SCALE NONE
FIGURE 17.3
REV.

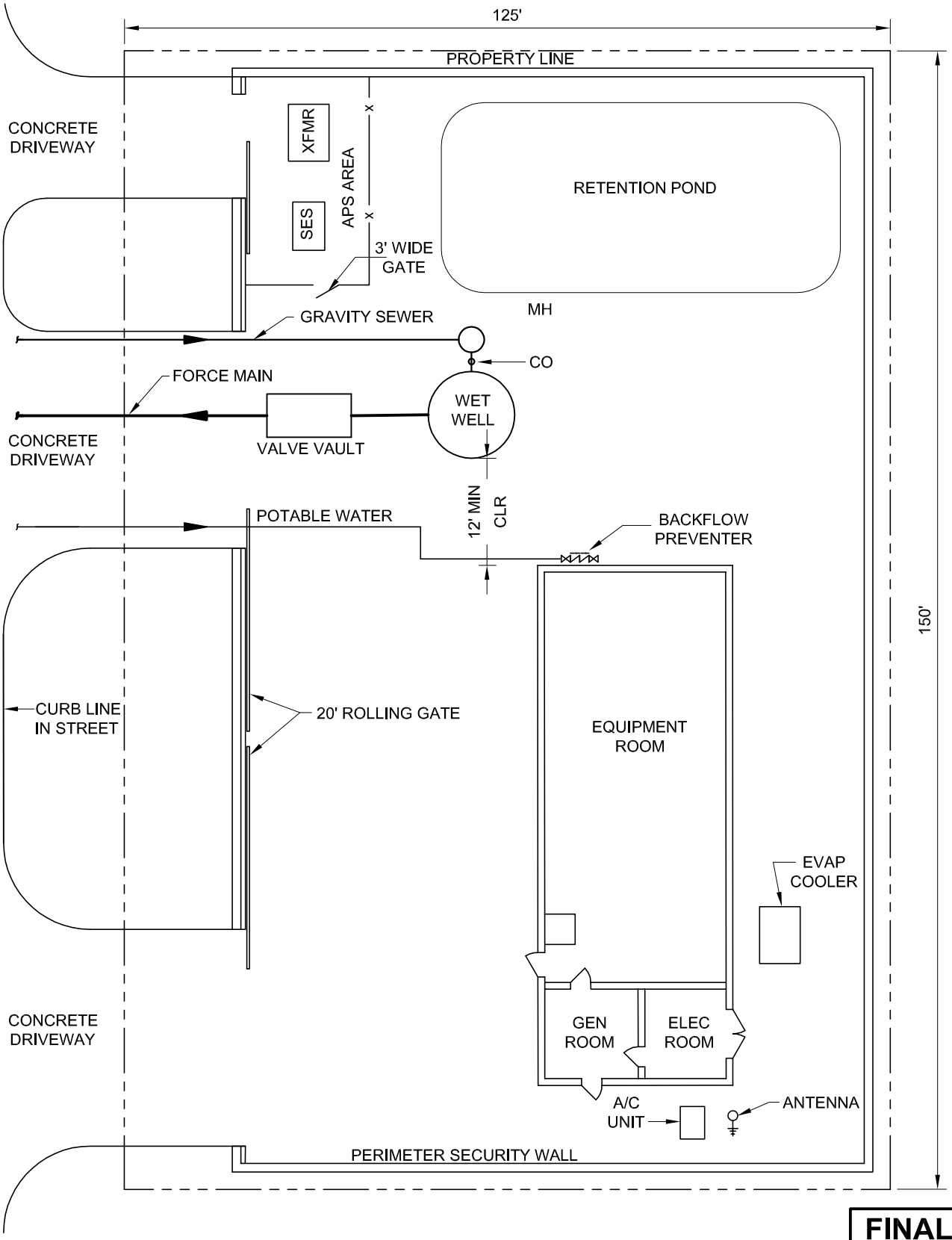

FINAL

REVISIONS	DWN	APVD	APVD	DATE

CITY OF SURPRISE

Maricopa County, Arizona

Water and Wastewater Guidelines

DESIGNED GS
DRAWN PAT
CHECKED
APPROVED
APPROVED
DATE APRIL 2011

SURPRISE ARIZONA

WASTEWATER LIFT STATION
TYPICAL SITE LAYOUT

SCALE NONE

FIGURE	REV.
17.4	0

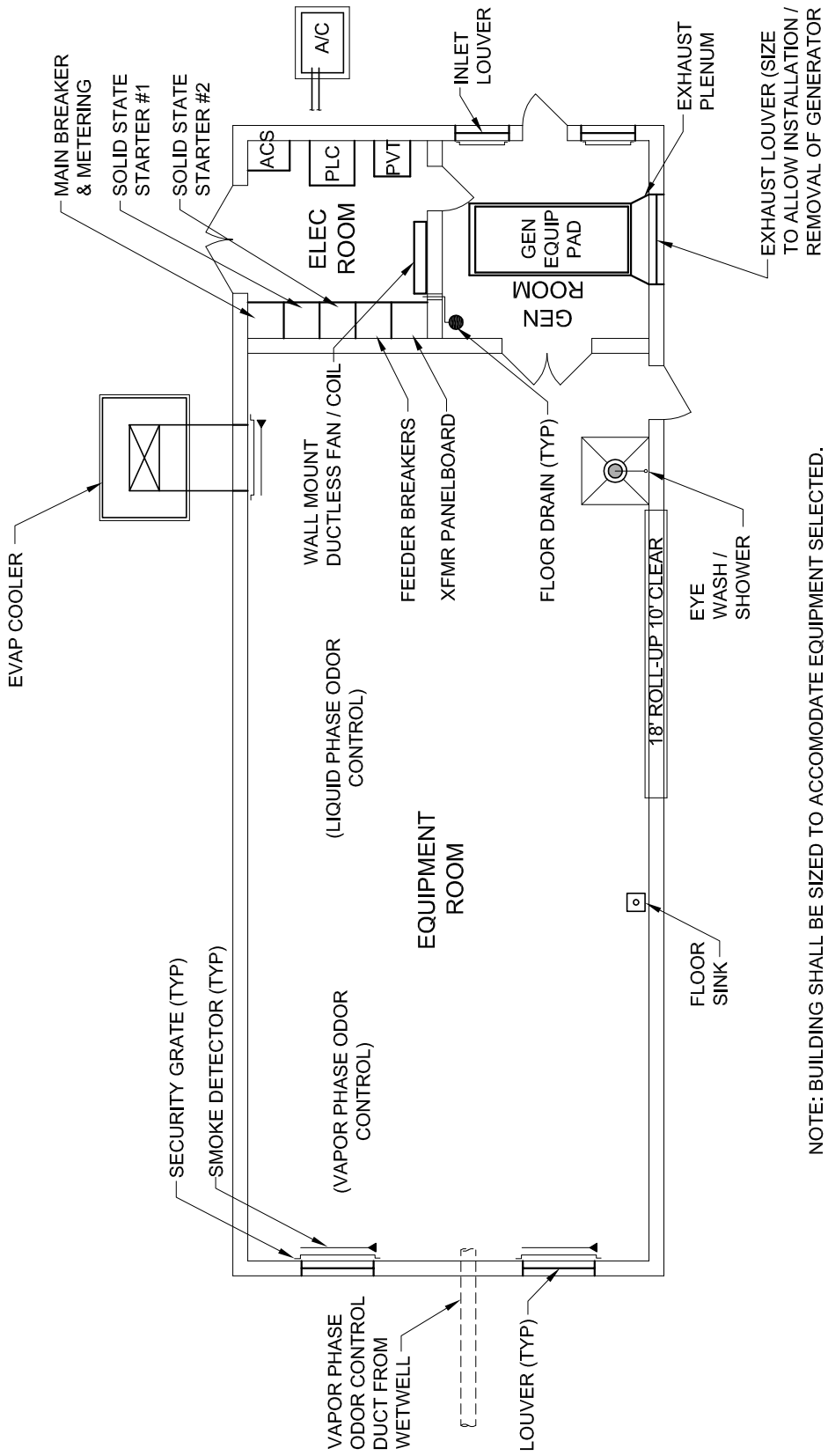

NOTE: BUILDING SHALL BE SIZED TO ACCOMODATE EQUIPMENT SELECTED.

FLOOR PLAN

FINAL

REVISIONS	DWN	APVD	APVD	DATE

CITY OF SURPRISE

Maricopa County, Arizona

Water and Wastewater Guidelines

DESIGNED GS
DRAWN PAT
CHECKED
APPROVED
APPROVED
DATE APRIL 2011

SURPRISE
ARIZONA

WASTEWATER LIFT STATION
TYPICAL FLOOR PLAN

SCALE NONE

FIGURE 17.5

REV.

CHAPTER 18 RECLAIMED WATER PIPELINES

18.01 General

A. This chapter outlines the requirements for reclaimed water pipelines having a diameter greater than 16 inches.

B. Meet the requirements of the following except as modified herein:

1. COS EDS.
2. *Arizona Administrative Code (AAC) R18-9-602.*
3. MAG Standard Specifications and Details.

C. Design in accordance with Chapter 6 of the EDS unless indicated otherwise herein.

18.02 Concept Design Review (CDR) Phase

A. General: The project shall be presented in a CDR Report, which shall be submitted to the City for review and approval. The CDR is the basis for the subsequent design process and must therefore provide a thorough description of the project.

B. Waiver of CDR Requirements: The City reserves the right to consider a waiver on portions of the CDR requirements described below for reclaimed water transmission pipelines that are low in complexity and/or do not involve significant evaluations of alternatives or alignments. Requests for waiver of CDR requirements shall follow the procedures detailed in Chapter 1, Section 1.5 of the COS EDS.

C. CDR Report: The CDR shall include, but not be limited to, the general CDR requirements noted in Chapter 1, and the following additional items:

1. Executive Summary.
2. Table of Contents.
3. Existing conditions.
4. Summary of utility conflict information, including pothole information or recommendations for utilities locations (Chapter 2).
5. Topographic mapping information summary (Chapter 2).
6. Draft Geotechnical Investigation Report (Chapter 3).

7. Draft Environmental Investigation Report (Chapter 1).
8. Summary/overview of the applicable drainage and traffic study findings with references to those documents submitted separately.
9. Preliminary plans and centerline profiles (30 percent design drawings) illustrating the recommended pipeline alignment and profile, facility plan views, proposed site plans and improvements, any offsite improvements, appropriate sections, elevations and details, existing topography, adjacent and underlying property ownership, ROW/easements, etc.
10. Alternative alignments studied and recommended alignment.
11. Recommendations for connections to existing facilities, as well as future connection(s) and tee locations.
12. Recommendations regarding pipeline design parameters and materials.
13. Identification of appurtenant facilities and spacing criteria.
14. Recommendations for bidding packages, scheduling, contractor staging, construction sequencing, and impacts to public areas and other stakeholders.
15. Identification of any permanent and temporary ROW/easement constraints and acquisition needs.
16. Design calculations including thrust restraint, pipe thickness design, and air-valve calculations.
17. Matrix summary of permits to be obtained.
18. List of agencies and utilities to review and sign the drawings.
19. Outline of technical specification sections and preliminary list of final design drawings.
20. Preliminary quantities and associated cost estimates.
21. Preliminary construction schedule.
22. Project correspondence file, including meeting minutes.
23. Inventory of existing facilities and improvements.

24. Graphics, detail sketches, tables, and other displays to support analysis and recommendations.

25. List of relevant reports, plans and maps reviewed, and other relevant project information.

26. Work plan for how construction is to be accomplished if connecting into existing facilities (phasing, shutdowns, disinfection, pressure testing, etc.).

27. Preliminary corrosion mitigation analysis and design (Chapter 5).

18.03 Agency and Utility Coordination

A. The Engineer shall initiate contact and coordinate efforts with outside utilities and agencies in accordance with Chapter 1.

B. Existing Utilities:

1. It is the responsibility of the Engineer to coordinate with all utility entities during design to accurately identify and locate all existing utilities in the project area.

2. All existing and proposed, public, and private utilities shall be presented on plan and profile drawings. See respective sections in this chapter for Blue Stake and potholing requirements. Examples of utilities include but are not limited to well water, potable water, reclaimed water, irrigation, wastewater collection, storm water collection, gas, petroleum, electric power, communication, fiber optic, and traffic control.

C. Record Drawings of Existing Utilities:

1. It is the Engineer's responsibility to obtain all available utility maps and as-built drawings from utility companies when infrastructure crosses or parallels a proposed City pipeline.

D. Field Verification of Utilities:

1. It is necessary to perform a field reconnaissance to locate existing utilities along the proposed pipeline alignment. Usually this is done with the field survey or walk thru completed as part of the CDR. The location of the existing utilities shall be compared with the locations recorded on utility drawings and utility maps. If discrepancies exist between utility drawings and field data, the particular utility or entity shall be contacted to resolve the discrepancy. Any Blue Stake

markings or future facility markings should be field located and included on the plans.

E. Blue Stake:

1. Blue Stake shall be contacted at least 48 hours prior to digging at 602-263-1100 or 811. Water-soluble white paint shall be used to mark the project area for the various Blue Stake member agencies.

2. The potholing or geotechnical boring companies shall be responsible for contacting Blue Stake directly and shall provide Blue Stake with the street address, cross streets, city, and county to identify the location of the work. In open country, USGS coordinates shall be provided unless Blue Stake requests another form of location information. The construction contractor shall be responsible for contacting Blue Stake during construction of the project.

F. Potholing:

1. All utility crossings or close utility interference shall be located and exposed by digging test pits (potholes). The design survey shall record the size, nature, and location of the potential crossing by station, offset, and elevation.

2. The number of potholes required shall be sufficient to determine the alignment and grade of the utility.

3. Use of “Soft Dig” (vacuum extraction) technologies is encouraged to minimize the amount of soil disturbed during the potholing process. Many utility companies utilize this technology, for the risk of damaging the utility is low.

4. Any disturbance to pavement, roads, or soil during potholing work shall be fully restored in accordance with the COS EDS.

5. Any repairs or damages caused by potholing shall be the responsibility of the potholing contractor.

6. The Engineer shall be responsible for coordinating the potholing effort. The pothole contractor shall be required to obtain all permits related to their work.

G. Separation Requirements:

1. Minimum separation distances shall be maintained around all utilities in accordance with ADEQ and MCESD requirements and the

minimum separation requirements of the affected utility entity. The Engineer is responsible for obtaining the separation requirements from each utility, and for maintaining the necessary clearances for the pipeline.

2. Horizontal and vertical separation of wastewater collection lines, reclaimed water pipelines, and storm drains from potable water facilities must comply with the current ADEQ and MCESD requirements, as reflected in MAG Standard Detail 404.

H. Utility Relocations:

1. Utility relocations may include but are not limited to existing communications cable, utility power, wastewater collection, natural gas, or petroleum.

2. If the relocation of an existing utility is necessary, an evaluation of the feasibility of moving an existing utility shall be conducted and relocation alternatives shall be developed with the utility owner.

3. The utility owner shall be presented with the alternatives developed for utility relocation. If all issues are addressed and the utility owner is agreeable to relocating the utility, the utility owner shall determine if they will design the relocation or if the Engineer will proceed with the relocation design.

4. The drawings for relocating utilities shall be included in the contract documents, unless the utility owner chooses to relocate its own utility.

5. For relocation of existing pipelines, the Engineer shall determine a new alignment, the new high or low points, and if air/vacuum valves and/or blowoff assemblies are needed.

6. Once a decision is made to relocate an existing utility and the preferred alignment is set, provisions shall be included in the contract documents for uninterrupted service during construction, unless otherwise allowed by the utility owner.

18.04 Final Design Phase

A. General: The Final Design Phase of the project must combine all the elements presented in the previous phases into detailed design drawings and specifications needed to bid and construct the project. Progress submittals to the COS are required at 60 percent and 90 percent level of completion in accordance with Chapter 1.

B. For pipeline projects, the CDR, with its preliminary plans and centerline profiles are sufficient for the 30 percent design submittal, and the Final Design usually requires progress review submittals at the 60 percent, 90 percent, and 100 percent completion levels.

C. Final Design Drawings: The Final Design Drawings must include, but are not limited to:

1. Cover Page.
2. Sheet Index.
3. Utility signatures.
4. Final Geotechnical Report.
5. Final Environmental Investigation Report.
6. Design Drawings and details for each discipline (i.e., Land Surveying, Civil, Structural, Mechanical, and Electrical).
7. Contract documents shall be wet stamped and signed according to Arizona Revised Statutes.
8. Plans and profiles.
9. Existing topography, pothole, and utility information.

D. Final Design Specifications: The Final Design Specifications shall include, but not be limited to:

1. Cover Page.
2. Table of Contents.
3. Specification Sections for each design discipline (i.e., Civil, Structural, Mechanical, and Electrical).
4. Contract documents shall be wet stamped and signed according to Arizona Revised Statutes.

18.05 Design of Pipeline Systems

A. General: Design pipelines in accordance with Chapter 10 unless indicated otherwise in this section.

B. Pipe Materials: Material shall be:

1. PVC for all buried pipeline diameters less than 12 inches in diameter in accordance with AWWA C905 with a minimum pressure class of 200.

2. Ductile iron pipe for all pipeline diameters 12 inches up to 42 inches conforming to ANSI/AWWA C151.

3. Polyurethane lined and coated steel pipe conforming to ANSI/AWWA C200 for exposed pipelines 24 inches diameter and larger.

4. Mortar lined and coated ductile iron pipe for all buried pipeline diameters up to 42 inches conforming to ANSI/AWWA C151.

5. Cement lined and coated steel pipe conforming to ANSI/AWWA C200 for buried pipelines 24 inches diameter and larger.

6. Alternate materials may be used upon written approval by the COS Public Works Director.

18.06 Fittings and Appurtenances

A. General: Provide fittings and appurtenances in accordance with Chapter 10 unless indicated otherwise in this section.

B. Backflow Prevention: For any facilities where reclaimed water is utilized, provide backflow prevention devices.

C. Reclaimed Water Identification: Provide purple (Pantone No. 512) epoxy coating for all valves, equipment, meters, pressure-relief valves, and combination valves in accordance with Chapter 5.

18.07 Pipe Joints

A. General: Provide pipe joints in accordance with Chapter 10 unless indicated otherwise in this section.

18.08 Trench Design

A. General: Provide trench design in accordance with Chapter 10 unless indicated otherwise in this section.

B. Pipe Bedding and Backfill: Unless the recommendations of the Geotechnical Report (Chapter 3) specifically note otherwise, pipe bedding

and backfill shall be performed in accordance with Chapter 6, Section 6.13 of the COS EDS.

18.09 Reclaimed Water Identification

A. General: Provide identification devices for buried and exposed reclaimed water lines.

B. Exposed metallic piping: Provide purple (Pantone No. 512) epoxy coating suitable for environment and in accordance with Chapter 5 as well as permanent label that indicates 'RECLAIMED WATER – DO NOT DRINK.'

C. PVC piping: Provide piping colored purple (Pantone No. 512) and identification tape for exposed piping that indicates 'RECLAIMED WATER-DO NOT DRINK.'

D. Buried Pipeline Markers: Marker balls shall be installed on all reclaimed water pipelines at all fittings and every 200 feet if the distance between fittings is greater than 200 feet. Reclaimed water marker balls shall be purple in color. Placement of marker balls shall be in accordance with COS EDS Standard Detail 6-25.

E. Buried piping: Provide polyethylene warning tape with thickness and width per current MAG standards above line that indicates 'CAUTION: RECLAIMED WATER – DO NOT DRINK.'

F. Buried ductile iron piping: Provide purple (Pantone No. 512) AWWA C105 polyethylene wrap.

G. Signage: Provide signs at all reclaimed water hose bibs, drain valve assemblies, and blow-off valves that indicate 'CAUTION: RECLAIMED WATER – DO NOT DRINK.'

18.10 Steel Pipe Design

A. General: Design steel pipe in accordance with Chapter 10 unless indicated otherwise in this section.

18.11 Ductile Iron Pipeline Design

A. General: Design ductile iron pipe in accordance with Chapter 10 unless indicated otherwise in this section.

18.12 Protective Coatings and Linings

A. General: Provide protective coatings and linings in accordance with Chapter 5 and Chapter 10 unless indicated otherwise herein.

B. Linings: Linings are installed on the interior surface of pipelines and protect against corrosion while maintaining low hydraulic frictional resistance. Main considerations related to linings include:

1. Epoxy lining.

2. Polyurethane lining.

C. Coatings: Coatings are materials applied to the exterior of the pipe for corrosion protection.

1. The exterior protection for buried steel pipe shall be polyurethane coating.

2. Dielectric tape wrapping may be used depending on soil conditions.

3. For exposed installation, the coating shall be polyurethane or epoxy, as described in Chapter 5.

4. Exterior protection for buried ductile iron pipe shall be a single or double layer of AWWA C105 polyethylene in accordance with Chapter 5, except as otherwise required by corrosion report.

D. The piping manufacturer shall be responsible for providing all piping material, linings, and coatings as a single source of responsibility.

18.13 Isolation Valves

A. General: Provide isolation valves in accordance with Chapter 10, Section 10.13 unless indicated otherwise herein.

B. Valve and Covers: Provide valves and covers in accordance with Chapter 6, Section 6.11 of the EDS that indicate ‘Reclaimed Water.’

18.14 Appurtenances and Structures

A. General: Provide pipeline appurtenances/structures; include mainline valves, outlets, air vacuum assemblies, drain valve stations, access structures/assemblies, conduit for communications cable, marking tape, pipeline markers, and thrust restraint in accordance with Chapter 10, Section 10.14 unless indicated otherwise herein.

B. As-Built Information: Contract specifications shall require that all pipelines and appurtenances be located by top of pipe elevation and GPS coordinates, and recorded on as-built drawings.

C. Thrust Restraint Systems: Thrust forces occur at changes in pipeline size or direction, such as at elbows, tees, reducers, caps, plugs, closed valves, etc. The following considerations shall be taken for design:

1. The Engineer is responsible for identifying the thrust forces within a pipeline facility and calculating per AWWA standards.

2. Once the forces have been determined, remedial actions can be considered for restraint. Thermal stresses and surge or transient pressures caused by water hammer or pump shutoff head must be considered in conjunction with hydrostatic thrust forces.

3. The Engineer shall utilize a restrained joint system to balance thrust forces.

4. The Engineer shall design all thrust restraints to withstand maximum anticipated pressure, whether operational, testing, or surge.

5. Engineers shall completely design the thrust restraint system. The information contained on MAG Standard Detail 303 also shall not be used unless calculations are produced for the specific project conditions that verify the stated restrained lengths. A performance specification that requires the pipe manufacturer or contractor to submit a thrust restraint design for review is not acceptable.

6. Engineer shall submit to the City all thrust restraint calculations.

D. Thrust Blocks: Unless specifically noted otherwise (such as Surprise Standard Detail 6-09), thrust blocks will not be allowed on COS reclaimed water lines.

18.15 Disinfection

A. General: Provide pressure testing, flushing, disinfection, and sampling of all potable water piping prior to placing the line in service.

B. Pressure Test: Complete pressure testing in accordance with EDS and MAG 610.14.

C. Chlorination and Bacteriological Test: Complete chlorination and bacteriological testing in accordance with EDS and MAG 611.

D. Flush, Sampling, and Testing: Complete flushing, sampling, and testing in accordance with the EDS and MAG 611.15.

E. Repeat chlorination, flush, sampling, and testing until satisfactory results are achieved.

CHAPTER 19 RECLAIMED WATER STORAGE RESERVOIRS

19.01 General

A. This chapter delineates the standards and guidelines for design of steel and pre-stressed concrete reservoirs, where a reservoir is defined as a facility that provides operational, emergency, and fire protection storage as well as regulation and control of reclaimed water.

B. The design criteria for steel and concrete reservoirs are governed by the guidelines of this chapter as well as the standards and codes presented in Chapter 1.

C. The civil design criteria described in Chapter 2 must be considered.

D. It is the responsibility of the Engineer to ensure that the design complies with ADEQ Engineering Design Guidelines for the Construction of Water Systems.

E. It is the Engineer's responsibility to make reference to and/or utilize industry standards not otherwise directly referenced within this document.

19.02 Site Considerations

A. General: Site selection requires direct coordination with COS to ensure the design meets the requirements of the water system master plan for the project as well as the COS Integrated Water Master Plan (IWMP).

B. Final selection of the site will be reviewed and approved by the COS Public Works Director. The list below describes site selection criteria specific to reservoir design:

1. Site location with easements, site ownership, neighboring property ownership, APN information, and legal description.

2. Preliminary reservoir size(s) and quantity, and master planned for not less than two 1.0-MG reservoirs.

3. Proximity to existing and future reclaimed water pump stations.

4. Distribution system hydraulic capacity requirements including overflow elevations.

5. Access to facility including staging plan and construction access.

6. Site Drainage: The tank site should be located in an area that will not be impacted by washes and not contain any US Army Corps of Engineers 404 washes or FEMA floodplains.

7. Future expansion with site suitable for buildout conditions that reserve space for at least two reservoirs of equal capacity.

8. Appearance complies with COS Unified Development code.

19.03 Concept Design Review (CDR) Phase

A. General: A CDR report is the basis for the subsequent design process and must clearly present the basis of design. Final design cannot proceed without an approved CDR, which must include the following at a minimum:

1. Executive Summary.

2. Table of Contents.

3. Project Background.

4. Description of property ownership, right-of-way, and easement information (per Chapter 1).

5. Draft Traffic Study.

6. Draft Drainage Study.

7. Draft Geotechnical Investigation Report.

8. Draft Environmental Investigation Report.

9. Draft Corrosion Control/Cathodic Protection Report.

10. Topographic mapping information summary.

11. Description of Reservoir Sizing and Site Selection to include at a minimum:
    a) Project-specific cost comparison of steel versus pre-stressed concrete, which includes capital costs and operating and maintenance costs.
    b) Summary of constructability issues.
    c) Summary of maintenance issues.
    d) Table that summarizes the reservoir sizing.
    e) Summary of volume criteria that justifies proposed tank size(s) based on seasonal demands.

12. Summary of reclaimed water supply and demand requirements on a monthly basis over a 12-month period from most recent IWMP, which shows that combination of proposed storage addresses maximum and minimum supply and demand scenarios, as well as seasonal fluctuations in accordance with Chapter 19, Section 19.06, and that pumping facilities are adequate.

13. Description of security features in accordance with the current COS Security Master Plan.

14. Preliminary drawings that include the following at a minimum:
    a) Proposed service area
    b) Site access
    c) Contractor staging area(s)
    d) Proposed site plan and improvements
    e) Preliminary grading plan
    f) Slope stabilization options, as required by the geotechnical report
    g) Any offsite improvements
    h) Preliminary plans, sections, and details
    i) Existing topography
    j) Property ownership information
    k) Rights-of-way/easements.

15. Description of connection(s) for future facilities.

16. Identify any permanent and temporary right-of-way or easement constraints and acquisitions.

17. Matrix summary of permits to be obtained and fees.

18. List of applicable agencies and utilities to review and sign the drawings.

19. Preliminary quantity and associated cost estimates.

20. Preliminary construction schedule.

21. Figures, tables, and other displays to support recommendations.

22. List of applicable reports, master plans, and maps reviewed and other relevant project information.

23. Preliminary work sequence for connecting to existing facilities (phasing, shutdowns, etc,).

24. Preliminary description of operations and controls to include communication with SCADA.

25. Draft design calculations.

19.04 Agency and Utility Coordination

A. The Engineer shall initiate contact and coordinate efforts with outside utilities and agencies in accordance with Chapter 1.

19.05 Final Design Phase

A. General: The Engineer shall provide a Final Design with progress submittals to the COS at 60 percent and 90 percent level of completion in accordance with Chapter 1, which builds upon work completed during the CDR. The Final Design shall include:

1. Final design drawings.

2. Final specifications.

3. Details of security features in accordance with the current COS Security Master Plan.

4. Final cost estimate.

5. Final drawings and specifications shall meet the general requirements presented in Chapter 1.

6. Final versions of all studies and reports submitted with the CDR.

B. Requirements of the final design include the following:

1. A minimum design service life of 50 years.

2. Provisions for future facilities required for anticipated growth in the service area.

3. The reservoir shall be architecturally compatible with the surrounding area.

4. Sufficient space for vehicle access for operation and maintenance.

5. Inlet, outlet, drain, and overflow piping with all necessary control and measurement features that may include but are not limited to the following:
   a) Altitude valves
   b) Isolation valves

c) Flapper valves
d) Backflow prevention
e) Roof vent
f) Man way access
g) Pipe couplings.

6. Disinfection provisions if required by the COS.

7. Electrical facilities in accordance with Chapter 7 for power to equipment, lighting, and receptacles.

8. Instrumentation and control facilities in accordance with Chapter 8, which includes communications, PLC, instruments, and SCADA system in accordance with COS standards and guidelines.

19.06 Volume Criteria

A. General: The reservoir volume shall be determined by the Engineer, if not provided by the approved COS Integrated Water Master Plan (IWMP).

B. Minimum Reservoir Size: A minimum reservoir size of not less than 1.0 MG is required unless approved in writing by the COS.

C. Maximum Sidewall Height: Volume shall be determined based on a maximum sidewall height of 16 feet.

D. Volume Requirements: The reclaimed management system shall address the following:

1. Seasonal and Daily Demand Fluctuations: The required storage volume shall be designed to balance all minimum and maximum supply and demand scenarios as well as seasonal fluctuations.

2. Combined Systems:
   a) Operational Storage: Provide operational storage based on reuse demand that accounts for irrigation over a typical 8-hour period and that accounts for staggering the irrigation schedules to avoid excessive peak demand scenarios
   b) Large User Requirements: The current IWMP defines large users such as golf courses and parks versus small users such as residential irrigation. Operational storage must be sufficient to attenuate peak demands by large users. Operational storage should be replenished during off-peak times. Operational storage can then be determined by providing a volume that is

equivalent to an average day demand unless otherwise required by the IWMP.

c) Emergency Storage: Emergency storage for reuse systems is required if no recharge facilities are available to dispose of water when demands are less than supply. The volume is determined by the Reuse Permit and APP permit requirements. This usually is defined as 5 days of storage for the low irrigation demand period of the year (January/February) to allow for rain events when no irrigation would take place.

3. Recharge/Injection Only: Operational and emergency storage requirements for ASR wells, vadose zone wells, and basins are already addressed in the design criteria for each and are sized according to the maximum flow requirements of the project, taking into account normal operational/emergency redundancy requirements for such facilities. Redundancy requirements are based on providing recharge capacity for the maximum day flow plus capacity for normal out-of-service maintenance together with allowance for mechanical equipment failure. The criteria for redundancy for wells is the same as for production wells. The criteria for basins has already been accounted for in the basin sizing for 50/50 wet/dry cycles. No additional storage is required.

4. Recharge/Recovery for Reuse: The operational/emergency requirements for the recharge component configuration are the same as above. The operational requirements for the reuse component are the same as discussed under the reuse only criteria above. The emergency requirement for reuse storage is accommodated through the recharge component and no additional storage is required.

19.07 General Design Requirements

A. General: Design yard piping, inlet and outlet piping, roof access, roof hatches, paving, and drainage in accordance with Chapter 13 unless indicated otherwise in this section.

B. Yard Piping:

1. Pipe material shall be as delineated in Chapter 10 and approved by COS.

2. All mainline valves shall be the same diameter as the pipeline.

3. Yard piping shall include above ground tank isolation valves.

4. Multiple tanks shall be piped such that each tank can operate independently, in parallel, or in series.

C. Inlet and Outlet Piping:

1. Inlet and outlet piping shall be configured to fill from the top and drain from the bottom to promote mixing, as illustrated by Figure 13.1 (Volume 2).

2. In-line valves shall be the same diameter as inlet/outlet piping.

D. Security and Safety:

1. Provide perimeter fencing and security features per Chapter 13 and the latest COS Security Master Plan unless otherwise indicated herein.

19.08 Reclaimed Water Identification

A. General: Provide identification devices for reclaimed water storage reservoirs as well as for buried and exposed reclaimed water lines.

B. Reclaimed Water Reservoirs: Provide permanent labels located 48 inches off finished grade circumferentially around reservoir, nominally spaced every 10 feet that indicate ‘RECLAIMED WATER – DO NOT DRINK’ in black lettering.

C. Exposed Metallic Piping: Provide purple (Pantone No. 512) epoxy coating suitable for environment and in accordance with Chapter 5 as well as permanent label that indicates ‘RECLAIMED WATER – DO NOT DRINK.’

D. PVC Piping: Provide piping colored purple (Pantone No. 512) and identification tape for exposed piping that indicates ‘RECLAIMED WATER-DO NOT DRINK.’

E. Buried Pipeline Markers: Marker balls shall be installed on all reclaimed water pipelines at all fittings, and every 200 feet if the distance between fittings is greater than 200 feet. Reclaimed water marker balls shall be purple in color. Placement of marker balls shall be in accordance with Surprise Standard Detail 6-25.

F. Buried Piping: Provide warning tape 12 inches above the line that indicates ‘CAUTION: RECLAIMED WATER – DO NOT DRINK.’

G. Buried Ductile Iron Piping: Provide purple (Pantone No. 512) AWWA C105 polyethylene wrap.

H. Signage: Provide signs at all reclaimed water hose bibs, drain valve assemblies, and blow-off valves that indicate 'CAUTION: RECLAIMED WATER – DO NOT DRINK.'

19.09 Concrete Reservoir Design

A. General: Design prestressed concrete tanks in accordance with Chapter 13 unless indicated otherwise in this section.

19.10 Steel Tank Design

A. General: Design welded steel tanks in accordance with Chapter 13 unless indicated otherwise in this section.

B. Color: Provide color that is consistent with surrounding development.

19.11 Water Quality Provisions

A. General: Provide water quality provisions in accordance with Chapter 6 and Chapter 13 unless indicated otherwise in this section.

B. Provide provisions for chlorination and sampling in accordance with Chapter 13, Section 13.10 for:

1. Onsite sodium hypochlorite generation and metering

2. Bulk sodium hypochlorite and metering.

C. Provide chlorine injection locations at inlet and outlet of reservoir in accordance with Chapter 13, Section 13.10.

19.12 Electrical Systems

A. General: Provide electrical systems, raceways, and lighting in accordance with Chapter 7 and Chapter 13 unless indicated otherwise in this section.

19.13 Instrumentation and Control

A. General: Provide instrumentation, controls, reliability, alarms, and security features in accordance with Chapter 8 and Chapter 13 unless indicated otherwise in this section.

B. Level Indication and Monitoring: Provide in accordance with Chapter 13, Section 13.12.

C. Reservoir Alarms: Provide in accordance with Chapter 13, Section 13.12.

D. Reliability: Provide in accordance with Chapter 13, Section 13.12.

E. Intrusion Alarm Switches: Provide in accordance with Chapter 13, Section 13.12.

19.14 Landscaping

A. General: Provide landscaping for reclaimed water storage reservoirs in accordance with Chapter 13 unless indicated otherwise herein.

CHAPTER 20 RECLAIMED WATER PUMP STATIONS

20.01 General

A. The intent of this chapter is to provide guidelines for the design of reclaimed water pump stations equipped with vertical turbine or horizontal, split-case pumps.

B. This chapter applies to reclaimed water pump stations with design flows of up to 15,000 gpm and TDH of up to 462 feet where three or more pumps are required at buildout conditions.

20.02 Definitions

A. Firm Pumping Capacity: The total pumping capacity of the station at maximum day demand with the largest pump out of service, at maximum static head differential levels.

B. Definitions for technical terms used in this chapter are as defined in the ANSI/HI *Pump Standards*:

20.03 Concept Design Review (CDR) Phase

A. General: The project shall be summarized and presented in a CDR report. The report will be submitted to the COS for review and acceptance. The CDR is the basis for the subsequent design process and must include the following at a minimum:

1. Executive Summary.
2. Table of Contents.
3. Project Background.
4. Description of property ownership, right-of-way, and easement information (per Chapter 1).
5. Draft Traffic Study.
6. Draft Drainage Study.
7. Draft Geotechnical Investigation Report.
8. Draft Environmental Investigation Report.
9. Draft Corrosion Control/Cathodic Protection Report.
10. Draft Surge Analysis Report.

11. Draft Electrical Coordination Study.

12. Topographic mapping information and survey summary.

13. Building design parameters.

14. Description of pump selection to include at a minimum:
    a) Technical selection criteria including operational scenarios of flow and head with the selected pumps.
    b) Cost considerations including capital costs, and operating and maintenance costs.
    c) Description of anticipated operational set points.
    d) Summary of constructability issues.
    e) Summary of maintenance procedures.
    f) Quantity of duty and standby pumps (minimum of 3 total).
    g) Proposed pump type and configuration, including the motor horsepower, desired number of stages, and impeller diameter.
    h) Manufacturer's curves for each type of proposed pump.
    i) Table that summarizes the pump design criteria, including design head, design flow, motor horsepower, net positive suction head available, net positive suction head required, and design efficiency.

15. Summary of reclaimed water supply and demand requirements on a monthly basis over a 12-month period from most recent IWMP, which shows that combination of proposed storage addresses maximum and minimum supply and demand scenarios, as well as seasonal fluctuations in accordance with Chapter 19, Section 19.06, and that pumping facilities is adequate.

16. Description of architectural features.

17. Description of security features in accordance with the current COS Security Master Plan.

18. Major equipment design criteria.

19. Summary of preliminary coordination meeting with Arizona Public Service Company.

20. Noise attenuation to satisfy requirements of COS Unified Development Code.

21. Review of latest water master plan analysis and effects on existing facilities within applicable water zone(s).

22. Summary of individual electrical loads with total connected electrical load.

23. Preliminary (30 percent) Drawings, which include:
    a) Civil site plan that presents proposed grading and major yard piping.
    b) Pump Station Plan showing major dimensions and proposed locations of mechanical equipment, major piping, and electrical equipment.
    c) Process and Instrumentation Diagrams (P&IDs) in accordance with Chapter 8.
    d) Electrical single-line diagram in accordance with Chapter 7.

24. Preliminary outline of technical specifications.

25. Pump and standby pump quantities:
    a) Minimum of three total pumps
    b) Maximum of ten total pumps
    c) Minimum of one standby pump.

26. Provisions for expandability and locations of future:
    a) Mechanical equipment
    b) Electrical equipment
    c) Major piping.

27. Standby generator sizing, where required, with proposed fuel type, fuel tank size, fuel consumption, and power output.

28. Summary of Community Development entitlement submittals.

29. Summary of major stakeholders and utilities with contact information for each.

30. Summary of Quality Level A subsurface utility location data in accordance with ASCE *Standard Guideline 38-02 for the Collection and Depiction of Subsurface Utility Data*.

31. Summary of permit requirements and submittals.

32. “Line of Sight” study for PLC/Radio Control.

33. Proposed project schedule with milestones for:
    a) Design completion
    b) Bid date
    c) Construction.

34. Preliminary cost estimate.

35. Proposed PLC and SCADA that include discussion on integrating with existing systems.

36. Preliminary control descriptions with discussion on proposed automatic and manual modes of operation.

B. It is the responsibility of the Engineer to ensure that the design conforms to reclaimed water regulatory requirements per the following:

1. ADEQ.

2. MAG.

3. MCESD.

20.04 Agency and Utility Coordination

A. The Engineer shall initiate contact and coordinate efforts with outside utilities and agencies in accordance with Chapter 1.

20.05 Final Design Phase

A. General: The Engineer shall provide a Final Design with progress submittals to the COS at 60 percent and 90 percent level of completion in accordance with Chapter 1, which builds upon work completed during the CDR. The Final Design shall include:

1. Final design drawings.

2. Final specifications.

3. Details of security features in accordance with the current COS Security Master Plan.

4. Final cost estimate.

5. Final drawings and specifications shall meet the general requirements presented in Chapter 1.

6. Final versions of all studies and reports submitted with the CDR.

20.06 Hydraulic Analysis

A. The Engineer shall perform a hydraulic analysis for all new, upgraded, or modified pump stations. Examples of modifications that require a hydraulic analysis include:

1. Pump replacement.
2. Modifications to pumping capacity, pump control, and operation adjustment.
3. Significant changes in total dynamic head (TDH) and check valve/control valve, closure time adjustments, etc.

B. Steady State Analysis: The Engineer shall perform a steady-state hydraulic headloss analysis of the reclaimed water pumping and transmission system to determine the TDH requirements of the pump station. TDH calculations are required for new facilities and for modifications to existing facilities. The TDH calculations need to consider the following:

1. Vertical and horizontal alignment of reclaimed water transmission lines based on available information such as as-built drawings.
2. Detailed headloss analysis of the pump suction piping to determine the net positive suction head available (NPSHA) for the pumping system. NPSHA shall always be more than the net positive suction head requirement (NPSHR) of the selected pump(s).
3. A system head-capacity curve.
4. Minimize pressure fluctuation within pressure zones to be less than 10 psig.
5. If necessary, the COS will provide operating criteria of existing reclaimed water pumping, transmission, and storage facilities such as reservoir levels, pump curves, and discharge pressures.
6. Minimum and maximum static head analysis.
7. Minimum and maximum pumping rates.
8. Pressure class and age of existing and proposed pipe.
9. Ensure pump shutoff head is less than pipe class rating.
10. Friction factors for existing and proposed pipe materials.

20.07 Surge Analysis

A. General: The Engineer shall perform a transient (surge) analysis for all pumped systems whether new or a modification of an existing system.

B. The analysis will be conducted with computer simulations of the reclaimed water pumping and transmission facilities. The following scenarios will be included at a minimum:

1. Normal operating conditions (pump startup and shutdown).

2. Emergency shutdown with loss of utility power with all ‘duty’ pumps in operation.

C. Surge Analysis Report: A surge analysis report that describes the methods and results of the computer simulations will be provided. The report will include:

1. Recommendations for pump operation.

2. Size, quantity, and location of all recommended surge mitigation measures such as surge tanks, combination air/vacuum relief valves, and air relief valves.

3. Maximum and minimum pipeline pressures.

20.08 Surge Mitigation Measures

A. The Engineer shall be responsible for all elements of the pump station design, including surge mitigation measures.

B. The Engineer shall utilize the pressure range derived from the surge analysis as the basis for establishing the design of the associated piping, including the design of pipe joints (gaskets), fittings, valves, surge tanks, and appurtenances used in the yard, and reclaimed water transmission piping.

C. Acceptable surge mitigation measures, controls, and accessories are required in accordance with Chapter 11.

D. Freeze Protection: Protect exposed and outdoor piping subjected to freezing temperatures in accordance with this chapter.

20.09 Vault Standards

A. General: The Engineer shall locate vaults in non-traffic areas whenever feasible.

B. Vaults, where required, shall be in accordance with Chapter 11.

20.10 Flow Measurement

A. Magnetic or ultrasonic flowmeters shall be used for flow measurement of pump stations in accordance with the requirements of Chapter 8.

20.11 General Structural Design Loads

A. General: Structures shall be designed to safely support the imposed live and dead loads in accordance with the more stringent requirements of Chapter 4 and Chapter 11.

20.12 Architecture and Landscaping

A. General: The appearance of the pumping facilities will reflect features of the surrounding community per the COS Community Development requirements and the Surprise Unified Development code. Provide architecture and landscaping features in accordance with Chapter 11 unless indicated otherwise in this section.

B. Anti-Graffiti Coating: At a minimum, the exterior building walls and masonry perimeter wall shall be coated with an anti-graffiti protection system in accordance with Chapter 11.

20.13 Pump Systems Design

A. General: Design pump systems in accordance with Chapter 11 unless indicated otherwise.

20.14 Pump Speed Control

A. General: Provide speed control through VFDs in accordance with Chapter 7 and Chapter 11 unless indicated otherwise in this section.

20.15 Pump Station Piping and Valves

A. General: Provide pump station piping and valves in accordance with the current IWMP with valves and accessories in accordance with Chapter 11, Section 11.15 unless indicated otherwise in this section.

20.16 Reclaimed Water Identification

A. General: Provide identification devices for buried and exposed reclaimed waterlines in accordance with Chapter 18 unless otherwise indicated in this section.

20.17 Pump Motors

A. General: Provide motors in accordance with Chapter 7 and Chapter 11 unless indicated otherwise in this section.

20.18 Pump Inlet Configuration

A. General: The Engineer shall design pump inlets based on the anticipated operational flows and in accordance with the standards referenced herein and in accordance with the pump manufacturer's recommendations.

B. Evaluate NPSHR and NPSHA at maximum flow and maximum temperature as well as at minimum flow at maximum temperature.

C. The pump inlet shall be:

1. Designed in accordance with Hydraulic Institute Standards to prevent cavitation, turbulence, vortexing, and jet velocities.

2. Designed such that the NPSHR is less than the NPSHA at the following conditions (where NPSHA is reduced by a minimum of 5 feet to provide a factor of safety):
   a) Initial minimum and maximum flow conditions
   b) Build-out minimum and maximum flow conditions.

20.19 Vertical Turbine Pumps

A. General: Provide vertical turbine pumps in accordance with Chapter 11 unless indicated otherwise in this section.

B. Reclaimed Water Identification: Provide purple (Pantone No. 512) epoxy coating for all valves, equipment, meters, pressure-relief valves, and combination valves in accordance with Chapter 5.

20.20 Horizontal, Split-Case Pumps

A. General: Provide horizontal, split-case pumps in accordance with Chapter 11 unless indicated otherwise in this section.

B. Reclaimed Water Identification: Provide purple (Pantone No. 512) epoxy coating for all valves, equipment, meters, pressure-relief valves, and combination valves in accordance with Chapter 5.

20.21 Vibration

A. General: Provide field vibration testing in accordance with Chapter 11 unless indicated otherwise in this section.

20.22 Heating, Ventilation, Air Conditioning (HVAC)

A. General: Provide HVAC equipment and systems in accordance with Chapters 9 and 11 unless indicated otherwise in this section.

20.23 Signage

A. General: Provide signage for the reclaimed water pump station site in accordance with Chapter 11 unless indicated otherwise in this section.

20.24 Access Gates

A. General: Provide access gates in accordance with Chapter 11 unless indicated otherwise in this section.

B. Provide separate access for utility power to the service entrance station and meter with internal security fence to separate these from the rest of the facility in accordance with Chapter 7, Section 7.20.

20.25 Security

A. General: Provide security features in accordance with Chapter 11 unless indicated otherwise in this section.

B. All other security issues shall be addressed by the Engineer, which include items described in the latest version of the most current COS Security Master Plan.

20.26 Noise Attenuation

A. General: Provide noise production studies and noise attenuation in accordance with Chapter 11 unless indicated otherwise in this section.

20.27 Support Systems

A. General: Provide support systems such as backflow prevention, service water, drain systems, freeze protection, telephone, and communication in accordance with Chapter 11 unless indicated otherwise in this section.

20.28 Fire Protection

A. General: Fire protection measures for pump stations shall be designed in accordance with COS, IBC, and IFC requirements and in accordance with Chapter 11 unless indicated otherwise herein.

20.29 Chlorination Provisions

A. General: Provide chlorination facilities at reclaimed water pump stations in accordance with Chapter 6 and Chapter 11 unless indicated otherwise herein.

20.30 Analog Instrument Provisions

A. General: Provide analog instrumentation in accordance with Chapter 8 unless indicated otherwise in this section.

B. The following analog instruments shall be provided at a minimum:

1. Discharge pressure-indicating transmitter.
2. Discharge residual chlorine analyzer.
3. Discharge turbidity meter.

20.31 Electrical Systems

A. General: Provide electrical systems such as Motor Control Centers, lighting, wire, and conduit panels in accordance with Chapter 7 and Chapter 11 unless indicated otherwise in this section.

B. Standby Power: Pump station power distribution systems shall be designed with redundant or standby power in accordance with Chapter 7 as follows:

1. Permanent standby power is required for all recharge pump stations.
2. Permanent standby power is not required for reclaimed water pump stations that serve non-industrial users.
3. Permanent standby power is required for reclaimed water pump stations that serve industrial users that require continuous service.
4. Disruptions in electrical service are limited to no more than 30 minutes where more than one MCC is associated with critical facilities.
5. Standby generators shall be designed to operate in the event utility power is lost as follows:
   a) Start with an automatic transfer switch to standby generator and back to utility power.
   b) Operate pump stations at firm pumping capacity for not less than 24 hours.
   c) Provide fuel storage for a minimum of 24 hours of operation.

d) Equipped with automatic exercise function and cool down feature that load tests the generator once per week or as recommended by the generator manufacturer.

20.32 Instrumentation and Control

A. General: Provide a comprehensive controls strategy, SCADA, PLC, and instrumentation in accordance with Chapter 8. Provide instrumentation, control, and alarms in accordance with Chapter 11, Section 11.30 unless indicated otherwise in this section.

CHAPTER 21 RECHARGE AND RECOVERY FACILITIES

21.01 General

A. The intent of this chapter is to provide guidelines and standards for the design and installation of recharge facilities associated with the COS water recharge and delivery system.

B. This chapter applies to the recharge of other surface water sources as permitted by law and taking into account applicable agency water quality regulations. The guidelines presented herein are considered minimum standards for the development of recharge and recovery facilities.

C. Recharge and Recovery Selection: The selected method of recharge and recovery shall be based on a detailed, site-specific hydrogeological study and investigation of the proposed project site together with other development issues.

21.02 Definitions

A. Surface Infiltration Basin: A shallow, unlined earthen basin with piping, valves, and appurtenances constructed by the Contractor based on the Engineer's design.

B. Injection Well: A well that is designed, drilled, developed, and equipped for the specific purpose of injecting source water into the groundwater aquifer for future withdrawal and use.

C. Recovery Well: A well that is designed, drilled, developed, and equipped for the specific purpose of withdrawing source water that has been injected into the aquifer by other means. Recovery wells can be used for potable or non-potable purposes as follows:

1. Potable recovery wells: Designed as production wells for the purpose of pumping groundwater that is classified as stored source water.

2. Non-Potable Recovery Wells: Designed to extract groundwater that is classified as stored source water, and used for non-potable purposes such as irrigation, aesthetic lakes, or other purposes.

3. Service Area Wells: Wells that are permitted potable production wells that can also be permitted as recovery wells to provide flexibility in how source water storage credits are used.

D. Aquifer Storage and Recovery (ASR) Well: A well that is designed, drilled, developed, and equipped for both injection and recovery in the same well casing, which is equipped to readily switch from the recharge mode to the recovery mode with minimal effort. ASR wells are typically utilized under the following conditions:

1. Aquifer storage can occur on a seasonal basis, for long-term storage credits to meet Assured Water Supply goals, as a drought protection supply, or a combination of these purposes.

2. Injection of source water shall occur only in the Upper Alluvial Unit (UAU) to avoid impacts to the Middle or Lower Alluvial Units (MAU or LAU) where potable water supplies are drawn from. In certain areas of the Surprise planning area, the UAU is dewatered and not available for ASR well injection.

3. The use of ASR wells in areas where the UAU (non-drinking water unit) is dewatered will only be considered on a case-by-case basis by the COS, and may require higher levels of treatment, monitoring, and barrier considerations to protect drinking water supplies.

4. For planning and design purposes, injection rates shall be initially planned at 50 percent of the well production rate (i.e., if the pumping test of an ASR well yielded a pumping rate of 1,000 gpm, the design injection rate would be 500 gpm).

5. ASR wells shall be equipped with a downhole flow control device that regulates the injection rate in addition to allowing for the pumping of the well. A description of this device is included in 21.07.

E. Vadose Zone Injection Well (VZIW): A shallow well that is designed, drilled, and equipped for injection purposes and completed above the water table. Injection occurs in the vadose or ‘unsaturated’ zone. Since VZIWs are constructed above the water table, a VZIW cannot be pumped; thus, VZIWs are not used for recovery or rehabilitation of recharge capacity. A VZIW has a finite life as its recharge capacity cannot be recovered. Depending on the water quality, hydrogeologic properties, injection rates, and duration of operation, the VZIW will lose injection capacity over time and will have to be replaced.

F. Monitoring Well: A well that is designed, drilled, developed, and equipped for the purpose of monitoring groundwater conditions as dictated by ADWR (USF) and ADEQ (APP) permit requirements, which include water quality testing and water level monitoring. Size and complexity can vary from

2-inch PVC piezometers for water level monitoring to 8-inch screened wells with submersible pump to collect samples. All monitoring wells must be drilled and installed in accordance with ADWR regulations. Depending on the specific purpose of the monitoring well, a pump may or may not be required. Monitoring wells are typically a requirement for recharge projects.

21.03 Agency and Utility Coordination

A. The Engineer shall initiate contact and coordinate efforts with outside utilities and agencies in accordance with Chapter 1.

B. Permit Applications: The Engineer is responsible for permits, applications, studies, and information in accordance with agency guidelines, which may require but are not limited to the following:

1. Underground Storage Facility (USF) Permit (ADWR).
2. Water Storage (WS) Permit, if groundwater storage credits are to be accounted (ADWR).
3. Recovery Well (RW) Permit (ADWR).
4. Monitoring Well Permit (ADWR).
5. Notice of Intent (NOI) to Drill a Well (ADWR).
6. Pump Installation Completion Report (ADWR).
7. Application for Approval to Construct (ATC) - (MCESD).
8. Application for Approval of Construction (AOC) - (MCESD).
9. Aquifer Protection Permit (APP) – (ADEQ or MCESD).

C. Hydrogeological Investigation: The Engineer is responsible to complete a hydrogeological investigation, which includes all computer modeling, field demonstration, and final inspection that sufficiently demonstrates the following at a minimum:

1. Proposed project will not cause unreasonable harm to the aquifer and associated land use.
2. Proposed project will meet aquifer water quality standards.
3. Proposed project complies with permit and is in accordance with all agency requirements, which includes ADWR and ADEQ.

D. Permit Applications: Applications for required permits for recharge and recovery projects must be prepared by the Engineer in accordance with applicable ADWR and ADEQ guidelines and regulations. The approved permits issued by the regulatory agencies will contain design and operational criteria that the Engineer shall incorporate into the project design.

E. Final Design and Construction: The Engineer is required to obtain final permits prior to final design, construction, and operation. The facility shall be designed in accordance with approved permits.

F. Design and Construction Changes: After final permits are received, the Engineer is responsible to coordinate all changes made during construction with the regulatory agencies, which entails the following at a minimum:

1. Submit proposed changes to ADWR and ADEQ immediately so that impacts to the permit can be determined.

2. Obtain all agency approval before proposed changes are constructed.

3. Contact the COS immediately of proposed changes if the proposed changes delay final completion of design and/or construction.

4. Conduct routine inspections during construction and prior to final regulatory agency inspection to identify possible deviations from permit conditions, and as-built conditions to avoid delays in regulatory agencies issuing a permit to operate.

21.04 Concept Design Review (CDR) Phase

A. General: The CDR phase of the project shall be presented in a CDR report, which shall be submitted to the City for review and approval. The CDR is the basis for the subsequent design process and must therefore provide a thorough description of the project.

B. CDR Report: The CDR shall meet the general CDR requirements noted in Chapter 1 of these Standards and Guidelines. The CDR shall also include the following at a minimum:

1. Executive Summary.

2. Table of Contents.

3. Project Background.

4. Description of property ownership, right-of-way, and easement information (per Chapter 1).

5. Draft Traffic Study.

6. Draft Drainage Study.

7. Draft Geotechnical/Geologic Investigation Report.

8. Draft Environmental Investigation Report (if necessary).

9. Draft Corrosion Control/Cathodic Protection Report (if necessary).

10. Draft Planning and Field Investigations.

11. Proposed recharge and recovery facility classification (recharge basins, VZIW, RW, MW, ASR).

12. Facility characteristics, appurtenances, and layout.

13. List of required permits.

14. Unreasonable harm and hydrologic feasibility analysis, map of one-foot water level rise, land and water use inventory, and water quality compliance.

15. Description of security features in accordance with the current COS Security Master Plan.

16. Preliminary drawings (30 percent) that include the following:
    a) Civil site plan that presents proposed grading, drainage and major yard piping, and monitoring well locations.
    b) Preliminary recharge/recovery facility design.
    c) Permanent and temporary right-of-way and easements and constraints.
    d) Process and Instrumentation Diagrams (P&IDs) in accordance with Chapter 8.
    e) Electrical single-line diagram in accordance with Chapter 7
    f) Utility power location.

17. Preliminary outline of technical specifications.

18. Summary of Community Development entitlement submittals.

19. Summary of major stakeholders and utilities with contact information for each.

20. Summary of Quality Level A subsurface utility location data in accordance with ASCE *Standard Guideline 38-02 for the Collection and Depiction of Subsurface Utility Data*.

21. Summary of permit requirements and submittals.

22. "Line of Sight" study for PLC/Radio Control (as requested by the COS).

23. Proposed project schedule with milestones for:
    a) Design completion
    b) Bid date
    c) Construction
    d) Required permit acquisition.

24. Preliminary cost estimate.

25. Proposed PLC and SCADA that includes discussion on integrating with existing systems.

26. Preliminary control descriptions with discussion of all automatic and manual modes of operation.

21.05 Final Design Phase

A. General: The Engineer shall provide a Final Design with progress submittals to the COS at 60 percent and 90 percent level of completion in accordance with Chapter 1, which builds upon work completed during the CDR. The Final Design shall include:

1. Final design drawings.

2. Final specifications.

3. Details of security features in accordance with the current COS Security Master Plan.

4. Final cost estimate.

5. Final drawings and specifications shall meet the general requirements presented in Chapter 1.

6. Final versions of all studies, investigations, and reports submitted with the CDR Report.

7. Acquisition of required permits.

21.06 Surface Infiltration Basins

A. Planning and Field Investigations: The Engineer is responsible to provide all modeling, studies, and field investigations based on regulatory agency requirements for the project. Examples of studies and field investigations required include but are not limited to the following:

1. Geologic and hydrogeologic information:
   a) Lithologic logs
   b) Geophysical logs
   c) Data on existing wells such as depth, production rate, water quality
   d) Geologic cross sections
   e) Water table data.

2. Soil Boring Distribution: All soil borings shall be distributed such that the entire recharge site is characterized.

3. Shallow Borings: Provide multiple shallow borings and associated data to determine the site surficial infiltration rate.

4. Deep Soil Borings: Provide multiple deep soil borings using sonic drilling or hollow stem auger techniques that extend to the water table in order to define the following:
   a) Shallow hydrogeologic conditions.
   b) Infiltration rates through the vadose zone.
   c) Detailed lithologic logging that includes grain size distribution using the Wentworth classification.
   d) Boring samples that are characterized:
      1) At a minimum of every 1 foot for the top 40 feet.
      2) At every change in formation characteristics.
      3) At every 5 feet from 40 feet down to the water table.
   e) Water table elevations, which must be indicated on all logs.

5. Samples: All samples shall be retained and clearly labeled, and shall be delivered to the City as chip trays and in Hubco bags.

6. Selected Site Borings: Additional shallow borings are also required at the selected site as follows:
   a) Minimum of one boring at the center of each proposed recharge basin.
   b) Extend borings to a depth of not less than 40 feet.

7. Boring Abandonment: Upon completion of all field drilling and testing, the Engineer is responsible to abandon all boreholes in accordance with State of Arizona regulations.

8. Infiltration/Percolation Testing: The Engineer shall conduct tests to determine the initial and long-term infiltration rate as well as infiltration/percolation capacity. Testing includes but is not limited to the following:
   a) Short-term downhole permeability tests shall be conducted in the shallow borings at selected depths to assess the vertical permeability of the subsurface soils and determine the infiltration capacity of the vadose zone soils.
   b) Evaluate surface recharge capabilities using split-ring infiltrometers coupled with shallow excavation percolation testing. At a minimum, infiltrometer testing shall be performed at the center of each proposed recharge basin and as follows:
      1) Utilize 24-inch diameter rings, following standard procedures for split-ring infiltrometer testing.
      2) Correct all infiltrometer tests for divergent flow.
      3) Conduct tests in excavated pits for subsurface split-ring infiltrometer testing (approximately 2-foot, 4-foot, and 6-foot deep pits).
      4) Collect soil samples at each pit depth for sieve analysis and hydrometer testing.
   c) Summarize all testing in a report that clearly identifies testing results, initial values of infiltration/permeability, and design values for infiltration/permeability.

9. Pilot Recharge Testing: The Engineer shall conduct pilot recharge tests to determine recharge rates when the proposed site's long-term infiltration rate is uncertain or where the infiltration rate varies or is expected to vary. Pilot Recharge Testing shall entail the following:
   a) Excavation of a 1-acre recharge basin to a depth of 4 feet, or as dictated by the hydrogeological investigation.
   b) Install several 2-inch piezometers in proximity to the pilot recharge basin to a depth based on groundwater levels and site conditions.
   c) Record water level frequently, flow direction frequently, and mounding information.
   d) Duration of the pilot test shall be not less than 30 calendar days up to 60 calendar days.
   e) Summarize all testing in a report that clearly identifies testing results, long-term infiltration rates, groundwater mounding,

design criteria, and long-term operation of the full-scale recharge basin facility.

10. Hydrologic Modeling: The Engineer shall provide hydrologic modeling as follows:
    a) An analytical groundwater suitable for evaluating the vertical and horizontal groundwater mound that will develop as a result of recharge.
    b) The model shall be capable of evaluating the area of hydrologic impact, determining the height of the mound, and evaluating the impact to wells and other facilities in the vicinity.
    c) The modeling must satisfy all regulatory agency requirements and associated permitting.

11. Reports: All data collected during the investigations described above shall be submitted to the City as a recharge assessment report.

B. Design Criteria:

1. Basin Size: The Engineer is responsible to determine the basin size based on site constraints and specific project needs. A typical basin layout is presented in Figure 21.1. The basin area and footprint must be based on the following factors:
    a) Minimizing side slope erosion due to wind action and basin maintenance requirements.
    b) Providing a minimum of two basins to allow for maintenance based on the required surface infiltration area and 50/50 wet/dry operation cycle as described herein.
    c) Avoiding the jurisdictional dam regulations that require embankment less than 25 feet in height, and capacity less than 50 acre feet.

2. Required Surface Infiltration Area: The surface infiltration area required must be sufficient for a 50/50 wet/dry operation, which allows for 50 percent of the basin area to be in service (wet) and 50 percent of the basin area to be out of service (dry) for maintenance and for infiltration rate recovery. In addition, the required surface infiltration area must:
    a) Allow for sufficient basin area to achieve the design recharge capacity allowing for the wet/dry cycle.
    b) Be sufficient in size per planned uses of the source water, such as direct reuse being combined with recharge as a seasonal component.

c) Account for low demand during non-irrigation season coupled with heavy precipitation periods during irrigation season.

3. Basin Design Criteria: Design basin in accordance with the following criteria and as presented in Figure 21.1:
   a) Side slopes shall be no steeper than 4:1 and shall include soil stabilization such as riprap.
   b) All soil materials used for berms as well as soil stabilization, which must allow for material removal in the basin, must be designed in accordance with Chapter 3.
   c) Basin bottom area shall be relatively level, with a 1 percent slope to the basin fill point, which minimizes erosion, soil movement, and allows for gradual spreading of the source water during basin fill cycles.
   d) Excavated depth of the basin shall be determined based on the hydrogeological report and assessment of the infiltration capacity of the materials encountered.
   e) Berm design must account for the maximum water depth and provide a minimum freeboard of 12 inches.
   f) Vehicle access:
      1) Provide 12-ft wide perimeter road around basin berms or along top of berms.
      2) Provide 12-ft wide ramp with maximum slope of 1:12 for interior vehicle and maintenance equipment access.
      3) Design for H20 traffic loading
      4) Cover road with 6-inches gravel or 4-inches AC pavement.

4. Basin Fill Structures: Design basin fill structures in accordance with the following criteria:
   a) Provide buried inlet piping at 6 feet below basin bottom that allows for periodic mechanical removal of fines or ripping of the basin bottom to recover infiltration capacity.
   b) Size inlet fill piping designed to operate within 1 fps to 1.5 fps.
   c) Basin fill structure shall be designed to reduce inlet velocity and evenly distribute water into the basin, and shall be comprised of a berm-constructed winged headwall with cobble-stones or equivalent energy dissipation (See Figure 21.1).
   d) The preferred method of water delivery to the basins is with a berm delivery structure/piping and headwall (See Figure 21.1).
   e) Provide a metering station capable of metering flows to each basin
   f) Provide flow diversion structures with isolation valves or gates.

g) Water transmission piping and associated facilities shall be designed in accordance with Chapter 18.

5. Maintenance of Infiltration Capacity: The Engineer shall provide recommendations for maintenance and recovery of basin infiltration rates, which must include the following:
   a) Operating parameters such as typical basin water depth that minimizes hydraulic clogging effects.
   b) Methods and equipment for recovering infiltration rates such as deep ripping the basin bottom.

6. Operational Monitoring: The Engineer shall summarize operational monitoring, which will be dictated by the associated permits for the facility. Operational monitoring typically includes but is not limited to the following:
   a) Flow monitoring
   b) Groundwater level monitoring
   c) Groundwater quality monitoring
   d) Basin water level monitoring in accordance with this chapter
   e) Duration of time water is in the basin
   f) Evapotranspiration calculations.

7. Flow Control to Basins: The Engineer shall provide flow control to recharge basins that includes the following:
   a) Flow-splitting control strategy based on the design basin volumes and total volume to each basin as measured by the flowmeter to each basin in conjunction with the staff level gauge and level sensor readings.
   b) Annunciate all discrete and analog signals to SCADA system.
   c) Set points for alarms that include alert levels in operational permits at a minimum.
   d) Operational ranges for flow and basin levels.
   e) Provisions to automatically and manually switch basins.
   f) Include automated shutdown sequence for emergency shutdowns.
   g) Include provisions for emergency discharge of effluent when automatic emergency shutdown of recharge facilities occurs.

21.07 Aquifer Storage and Recovery (ASR) Wells

A. Planning and Field Investigations: As part of the design of an ASR facility, the Engineer is responsible to develop design criteria and complete all planning, hydrogeological studies, and field exploration, which are typically required for USF and APP permits to construct and operate a ASR facility.

Examples of studies and field investigations required include but are not limited to the following:

1. Geologic and hydrogeologic information including lithologic logs and geophysical logs

2. Existing well data with depths, production rates, water quality, geologic cross sections, and water level data that may be evaluated to determine drilling depths and potential for screened intervals.

3. A “slim hole” bore hole shall be drilled to collect site specific data used in the final design of the ASR well. The slim hole borehole shall serve as the first phase of the ASR drilling process and would allow for subsequent reaming of the hole using the reverse rotary drilling method. Include the following as part of the bore hole effort:
   a) Provide lithologic logs of the borehole to identify casing and screening zones
   b) Collect samples of formation material to design the filter pack
   c) Collect water quality data to assess injection compatibility and casing material selection.
   d) Working with the drilling contractor, the Engineer shall design a mud program that minimizes the formation plugging potential of the drilling method to ensure that the greatest recharge capability of the well is maintained.

4. Pilot Recharge Testing: The Engineer shall conduct pilot ASR well recharge test, which typically entails the following:
   a) Drill ASR well.
   b) Conduct pump tests for new ASR well.
   c) Design recharge test based on hydrogeologic properties of aquifer.
   d) Conduct pilot recharge testing for sufficient time to determine design injection rates and groundwater mounding impact.
   e) Summarize all testing in a report that clearly identifies testing results and design criteria and long-term performance of the full-scale ASR facility.

5. Hydrologic Modeling: The Engineer shall provide hydrologic modeling as follows:
   a) An analytical groundwater suitable for evaluating the vertical and horizontal groundwater mound that will develop as a result of recharge.

b) The model shall be capable of evaluating the area of hydrologic impact, determining the height of the mound, and evaluating the impact to wells and other facilities in the vicinity.

c) The modeling must satisfy all regulatory agency requirements and associated permitting.

6. Reports: All data collected during the investigations described above shall be submitted to the City as a recharge assessment report.

7. Based on the data evaluation, final design of the ASR well can take place, and the final number of ASR wells can be determined to meet the project capacity requirements.

B. Design Criteria: The Engineer is responsible to develop final design criteria based on permitting requirements and field investigations. The well drilling and completion guidelines and standards required by ADWR shall be followed for the construction of an ASR Well project. Guidelines and design criteria for ASR well design include but are not limited to the following:

1. Drilling: ASR wells are to be drilled using the reverse rotary drilling technique as follows:

a) A pilot hole is drilled initially

b) The final bore hole is reamed to its desired diameter.

c) Typically, a 24- to 28-inch borehole is drilled depending on the target well capacity and downhole casing/screen/equipment requirements.

d) Engineer shall consult with the drilling contractor and hydrogeologist to design a mud program that will minimize formation plugging and potential reduction in recharge capacity of the ASR well.

2. Construction: ASR wells are to be constructed as presented in Figure 21.2.

3. Downhole Flow Control Provisions: Provide the following to accommodate downhole flow control equipment:

a) Minimum 16-inch diameter casing and screen.

b) Screen portion of the well shall be constructed with a louvered screen sized according to the filter pack design.

c) Casing and screen material shall be either HSLA or Type 304 stainless steel depending on water quality, intended life of the ASR well, and as recommended by corrosion study in accordance with Chapter 5.

d) Account for material corrosion to mitigate aquifer plugging and loss of recharge capacity.

4. Downhole Flow Control Device: Provide a downhole flow control device that regulates injection rate as well as pumping cycle as follows:
   a) Variable orifice flow control valve that utilizes hydraulic fluid or nitrogen gas to modulate the valve and maintains the desired recharge pressure in the well casing.
   b) The Engineer shall specify operating flow, operating pressure, setpoints, and allowable ranges.
   c) Design wellhead and column piping to release air and minimize air entrainment
   d) Acceptable manufacturers are provided in the COS Preferred Equipment List.

5. Vertical Turbine Pump: Provide a vertical turbine pump to recover water from the ASR well during purge cycles, and to recover water from storage during high use periods. The pump shall be designed as presented in Figure 21.3 and as follows:
   a) In accordance with Chapter 14, Section 14.06.
   b) Pump bowls equipped with check/foot valve on upstream of pump intake.
   c) Pump bowls located below the flow control valve and housed in a blank section of the well casing.

6. Well Head Completion: Provide well head completion and piping as presented in Figure 21.4, which also includes the following:
   a) Well inlet piping
   b) Purge/recovery water outlet piping
   c) Magnetic flowmeter
   d) Isolation gate valves
   e) Discharge pressure gauge
   f) Discharge air/vacuum release valve
   g) Motorized butterfly valves to control the well.
   h) Purge water piping connected to sanitary sewer system for treatment.
   i) Design for vacuum conditions where anticipated.
   j) Operating Sequence:
      1) Upon recharge startup, the downhole flow control valve shall be closed and the air/vacuum valve shall be open to expel air.

2) Once the column is full of water, the air/vacuum valve shall be closed prior to opening the downhole flow control valve for recharge.

7. Operational Control: Operational control must provide the following features:
   a) Sufficient pressure sensors and level sensors for automatic operation.
   b) Annunciate all discrete and analog signals to SCADA system.
   c) Pressure reading and water level monitoring shall dictate when the recharge well shall be taken out of service for rehabilitation.
   d) Specify the set points for alarms and operational ranges for pressure, flow, and water levels based on site-specific design criteria.
   e) Provide set points based on the regulatory permit levels, which typically include alert levels for high water levels, as well as Operational Prohibition levels specified by the required Agency USF and APP permits.
   f) Install emergency well high-high shut off probe to avoid well overflow.
   g) Include a low-pressure set point indicating a system leak shall automatically shut down the ASR well.
   h) Include automated shutdown sequence for emergency shutdowns.
   i) Include provisions to for emergency discharge of effluent when automatic emergency shutdown of recharge facilities occurs.

C. Isolation Valves: Provide isolation gate valves or butterfly valves in accordance with requirements of Chapter 18, Section 18.13.

D. Specialty Equipment:

1. The air/vacuum valve, flowmeter, and pressure reducing valve shall coated with internal epoxy lining and external coating in accordance with Chapter 5.

2. Well head design shall include adequate thrust restraint.

3. As manufactured by those listed on the COS Preferred Equipment List.

21.08 Vadose Zone Injection Wells (VZIWs)

A. Planning and Field Investigation: As part of the design of a VZIW facility, the Engineer is responsible for planning and field investigation as well as

review of existing wells, hydrogeological data, groundwater elevations, and water quality. Examples of studies and field investigations required include but are not limited to the following:

1. Cost Analysis: Conduct a cost analysis that includes capital costs as well as operation and maintenance costs over the anticipated life of the VZIW and include well replacement costs. Where applicable, provide cost comparison between VZIW and other recharge methods.

2. Existing Data: Conduct a thorough review of existing data including the ADWR well database to determine:
   a) Soil and geologic lithology
   b) Hydrogeologic properties of the vadose zone
   c) Groundwater elevation
   d) Location and use of adjacent wells.
   e) Identify subsurface structures that may be impacted by groundwater mounding.

3. Preliminary Bore Holes: Provide bore holes at proposed site to determine design parameters. Bore holes may also be used for permanent monitoring wells if practical and approved by USF and APP permits. Develop and implement a preliminary bore hole program that entails small diameter (2-inch) bore holes, soil sample collection and analyses to determine:
   a) Soil properties and particle size distribution using sieve analysis.
   b) Design injection rate and injection zone.
   c) If practical, one or more of these bore holes shall be completed as a project monitoring well(s) for the USF and APP permits.

B. Design Criteria: The Engineer is responsible to develop final design criteria based on permitting requirements and field investigations. The Engineer shall also identify proposed VZIW sites as well as potential sites for replacement VZIWs. A typical above-grade VZIW and a typical below-grade VZIW are presented in Figures 21.5 and 21.6, respectively. Guidelines and design criteria for VZIWs include but are not limited to the following:

1. Bore Hole and Well Design: The vadose zone well bore shall be drilled in accordance with the following:
   a) Wells shall be completed in accordance with ADWR well drilling procedures and regulations.

b) Utilize bucket auger drilling technology for diameters 48 inches and smaller.
c) Drilling technique shall not result in wall smearing or otherwise decrease infiltration rates.
d) Provide a 6-inch pilot bore hole that is drilled prior to the bucket auger to collect formation samples for sizing the gravel filter pack.
e) Complete well with 12-inch PVC well casing and slotted well screen.
f) Well casing shall be designed to house the injection pipe, orifice plate, and transducer/sounding tubes.
g) Slotted Well Screen shall incorporate filter pack and shall be sized according to the formation gradation requirements.
h) Gravel pack shall be disinfected with NSF certified chlorine compound such as sodium hypochlorite.
i) Sounding tubes shall be 2.5-inch PVC pipe material that provides access to electric sounder/transducer level measurement device.

2. Equipping and Completing Wellhead: Complete and equip the wellhead in accordance with the following:
   a) Complete wellhead above-grade or housed in below-grade vault as determined by site security, site constraints, and aesthetic considerations.
   b) Injection Pipe: Provide an injection pipe with removable orifice plate sized for the design injection rate in the well casing. The orifice plate shall be designed to control the flow rate into the well. The injection pipe shall be 4-inch Schedule 80 PVC fitted with strap-on stainless steel centralizers to center the injection pipe in the well casing.
   c) Vent Pipe/Transducer Tubing: Provide vent pipe/transducer tubing that is:
      1) Constructed of a 3-inch steel pipe in the upper section.
      2) Comprised of 3-inch Schedule 80 PVC in the lower section, with alternating screen and blank pipe.
      3) Equipped with a Schedule 80 PVC cap with 3/8-inch diameter hole placed on the bottom of the tube.
   d) Recharge Orifice Box and Injection Head: Provide a recharge orifice box and injection head (Figure 21.5), which includes the following:
      1) Piping and valves to control flow to the VZIW
      2) Discharge flowmeter.

3) Discharge pressure gauges
4) Combination air/vacuum valve
5) Four-inch PRV.

e) Thrust Restraint: Provide adequate thrust restraint for all well head piping, valves, and accessories.

f) Provide an epoxy lining for piping and valves to mitigate the effects of cavitation on material surfaces.

g) Wellhead Valve: Provide a well head valve that serves as a throttling valve in conjunction with the orifice plate to control the flow rate into the well.

h) Flushing Components: Provide flushing components designed for not less than 2 ft/s to minimize clogging.

C. Isolation Valves: Provide isolation gate valves or butterfly valves in accordance with requirements of Chapter 18, Section 18.13.

D. Specialty Equipment: See Chapters 8,10, and 11 for reference to design criteria for specialty equipment:

1. Water Level Transducer

2. Combination air/vacuum valve

3. Pressure gauges

4. Pressure sensor

5. Flowmeter

6. 4-inch PRV

7. Orifice plate – 4-inch PVC recharge orifice box and 4-inch flanged cast iron injection head tee, including two pre-sized removable orifice plates where orifice size is based on recharge and hydraulic characteristics of each well.

8. Datalogger

21.09 Injection Wells

A. Planning and Field Investigations: The planning and field investigation for injection wells is as described for ASR wells per Chapter 21, Section 21.07A. Permitting requirements are also expected to be similar as for ASR wells with the exception of a recovery well permit not being required.

B. Design Criteria:

1. The design criteria for an injection well are the same as those specified for ASR wells per Chapter 21, Section 21.07B with the exception of the criteria for recovery pumps and method of downhole flow control as a pump is not installed and therefore rehabilitation of the recharge capacity through pumping is not applicable.

2. Vacuum conditions: Where negative well head pressures are anticipated in the design, the materials for the well head piping, valves, and appurtenances shall be designed for vacuum conditions.

21.10 Recovery Wells

A. Planning and Field Investigations: The planning, field investigations, and preliminary design for recovery wells is as described for Water Production Wells in Chapter 14, Section 14.01.

B. Design Criteria:

1. The Design Criteria for a Recovery Well intended for potable purposes are the same as specified for Water Production Wells, Chapter 14, Section 14.02.

2. Disinfection: Non-potable recovery wells and piping shall be disinfected in accordance with Chapter 18 and MAG standards to prevent re-growth in the source water system.

21.11 Monitoring Wells

A. Planning and Field Investigations: The planning and field investigations required for monitoring wells shall be in accordance with ADWR (USF) and ADEQ (APP) permitting requirements and completed during the project permitting phase. The required permits will specify location, depth, well level monitoring requirements, and water quality monitoring requirements if applicable.

B. Design Criteria. The monitor well design must meet the requirements of the permitting agency requiring the well (ADWR, ADEQ) for the specific monitoring to be performed. Appendix D specifies detailed design criteria for Monitoring Wells that must be followed (See Appendix D). The following summarizes general design criteria that must be followed unless otherwise specified by the regulatory agency (See Figure 21.7):

1. Borehole construction shall consist of drilling an 11-inch borehole by the reverse rotary method (air or water), installing conductor casing

with appropriate surface seal and providing geophysical logging of the borehole.

2. The well shall be completed with 5.5-inch Schedule 80 PVC blank casing and screen for shallow installations, or low carbon steel for deep installations. Perforated screen opening size and interval as well as gravel pack size and placement shall be determined by the hydrogeologist. A typical monitoring well is shown on Figure 21.7.

3. For water quality sampling monitoring, a dedicated submersible pump, submersible motor, control box, electric cable, column pipe, sounding and transducer tubes, centralizers, and well seal shall be furnished and installed.

4. The well head appurtenances for the monitoring well shall be housed in an aboveground, lockable steel cover or cage on a concrete pad (See Figure 21.7). Alternatively, the well head appurtenances may be housed in a belowground utility vault for security and/or aesthetic reasons, provided that access does not fall under confined space entry regulations. Provide vaults and covers suitable for H20 loading in traffic areas.

5. The wellhead completion shall include an air/vacuum release valve, turbine flowmeter, sampling port, check valve, and fittings. The wellhead sampling port shall be stainless steel. A typical monitoring well wellhead completion is shown on Figure 21.8.

6. The wellhead components and submersible pump drop pipe shall be Type 304 stainless steel or PVC with stainless steel couplings.

21.12 Corrosion Control

A. General: Provide corrosion protection measures, which may include corrosion monitoring, cathodic protection, and/or protective coatings in accordance with Chapter 5 requirements.

21.13 Materials

A. Pipe and Fittings:

1. Provide ductile iron pipe and fittings for onsite piping, in accordance with Chapter 10, and provide internal epoxy coating in accordance with Chapter 5.

2. Provide Schedule 80 PVC pipe and fittings for onsite piping in accordance with Chapters 10 and 18.

3. Provide HSLA pipe and fittings for onsite piping in accordance with Chapters 10 and 18.

4. Provide 304 stainless steel pipe and fittings for onsite piping in accordance with Chapter 6.

B. Valves:

1. Provide valves and appurtenances in accordance with Chapter 10, and provide internal epoxy coating in accordance with Chapter 5.

C. Pipe Supports:

1. Pipe supports shall be constructed of hot-dipped galvanized steel with Type 316 stainless steel hardware.

2. Horizontal pipe supports shall be adjustable with carbon steel saddle and neoprene pad.

3. Provide supports on either side of control valves and isolation valves.

D. Restraint: Provide adequate well head thrust restraint.

E. Pumps: See Chapter 14, Sections 14.06.A and B.

F. Pump Motors: See Chapter 14, Sections 14.06. A and B.

21.14 Support Systems

A. Backflow Prevention: Provide approved backflow prevention devices to avoid potential contamination. If a backflow prevention device is mounted adjacent to a wall, it shall be mounted a minimum of 24 inches away and no greater than 3 feet high to allow for maintenance. Provide backflow prevention for the following water sources:

1. Potable Water

2. Reclaimed Water.

B. Service Water: Provide for housekeeping and landscaping in accordance with the following:

1. Supply from potable water or approved source water source.

2. Where potable or reclaimed water is the source, provide an approved backflow prevention device.

3. Provide 3/4-inch hose bibs with galvanized or epoxy-coated steel hose rack with 50 feet of 3/4-inch rubber hose.

4. Provide a turbine meter located in a meter box or vault on the exterior side of the site perimeter wall.

C. Drain System: Provide floor drains, hub drains, and floor sinks for drainage of air relief valves, seal water, condensate, and housekeeping as follows:

1. Sanitary sewers shall be gravity type with minimum slope of 0.007 ft/ft.

2. Drain piping shall be PVC or cast iron soil pipe with a slope of at least 1 percent.

3. Provide cleanouts and vents in accordance with the currently adopted plumbing code.

4. Discharge to sanitary sewer in a manner that is compliant with currently adopted codes.

5. Sump pumps, where required, shall be duplex type submersible and equipped with the following:
   a) Ductile iron or PVC discharge piping
   b) Type 316 stainless steel lifting chain
   c) Discharge check valve
   d) Float level controls
   e) High water level alarm shall annunciate to SCADA
   f) Aluminum grating or tread plate cover.

21.15 Electrical Systems

A. General: Design electrical systems in accordance with Chapter 7 and the requirements herein (if required).

B. Pump Motors: Provide in accordance with Chapter 14, Section 14.06.

C. Circuit breakers: Provide independent thermal-magnetic trip circuit breakers as follows:

1. Convenience receptacles.

2. Exhaust fan (if applicable).

3. Lights.

D. Convenience Receptacles: Provide not less than 3 convenience receptacles in accordance with the following:

1. Three-prong, ground fault circuit interrupter type.

2. Suitable for 120 VAC/60 Hz/1 Ph power.

E. Electrical Rating: All junction boxes, panels, and electrical devices shall be NEMA 4X rated.

21.16 Instrumentation and Control

A. General: Design instrumentation and control systems in accordance with Chapter 8 and the requirements herein.

B. The Engineer shall prepare a comprehensive controls strategy for the facility with the technical specifications for all SCADA, PLC, and associated instrumentation in accordance with Chapter 8.

C. Provide a single integrator or subconsultant to be responsible for all PLC programming and SCADA per Chapter 8 requirements.

D. The Engineer shall also require that the integrator provide detailed description of each operation for every loop associated with the facility.

E. Level Measurement: Provide ultrasonic level sensors that measure liquid level where required.

F. Pressure Measurement: Pressure measurement shall be provided as follows:

1. Provide pressure-indicating transmitters on the inlet and outlet headers between the isolation valves and the site property line, thus ensuring pressure reading available at all times.

2. Provide a threaded connection with tee and ball isolation valve to an oil-filled pressure gauge and pressure transmitter.

3. Pipe, fittings, and tubing shall be galvanized steel or Type 304 stainless steel tubing.

4. Indicate both upstream and downstream header pressures remotely to SCADA.

G. Pump Controls, Alarms, and Monitoring: Instrumentation and switches for controls, monitoring, and alarms to SCADA shall be provided in accordance with requirements of Chapter 8. Provide the following for each pump:

1. START/STOP function from remote workstation.
2. AUTO or MANUAL operation from remote workstation, where pump speed can be adjusted manually in 'MANUAL' mode.
3. AUTO or HAND mode of operation indication at SCADA.
4. RUN or STOP status indication at SCADA.
5. HIGH TEMPERATURE alarm indication at SCADA.
6. HIGH DISCHARGE PRESSURE alarm indication at SCADA.
7. ALARM reset command function from remote workstation.

H. Basins, VZIW, and ASR Well Alarms and Monitoring: Pressure readings, flow rate, and water levels shall be monitored and the signals sent back to the operational SCADA system. The Engineer shall provide set points for alarm and desired operational ranges for the recharge facility. The alert water and operational prohibition water levels shall be as a minimum as specified in the Agency permits (USF and APP). The emergency shutdown of the recharge basin or well shall be based on the alert water level. The shutdown of the basin or well shall be automatic. To accommodate automatic operation, the Engineer shall plan for emergency discharge of effluent upon automatic emergency shut down of the recharge facilities. A low-pressure set point indicating a leak in the system, or high pressure or high flow shall automatically shut down the basin/well. Instrumentation, switches, monitoring, and alarms to SCADA shall be provided in accordance with requirements of Chapter 8. Provide the following at a minimum:

1. FLOW RATE through magnetic flowmeter, which indicates flow rate in gpm or mgd per COS with total volume in MG at SCADA.
2. ALERT WATER LEVEL utilizes level switch which indicates ALERT WATER LEVEL at SCADA.
3. HIGH WATER LEVEL utilizes level switch which shuts down injection pumps and indicates HIGH WATER LEVEL at SCADA.

4. HIGH DISCHARGE PRESSURE utilizes pressure switch that shuts down injection pumps and indicates HIGH DISCHARGE PRESSURE at SCADA.

5. HIGH-HIGH EMERGENCY LEVEL utilizes a hardwired level probe as an emergency backup to shut down the basin or well to prevent overflow.

I. Pump Design Criteria: Design in accordance with Chapter 14, Section 14.06.

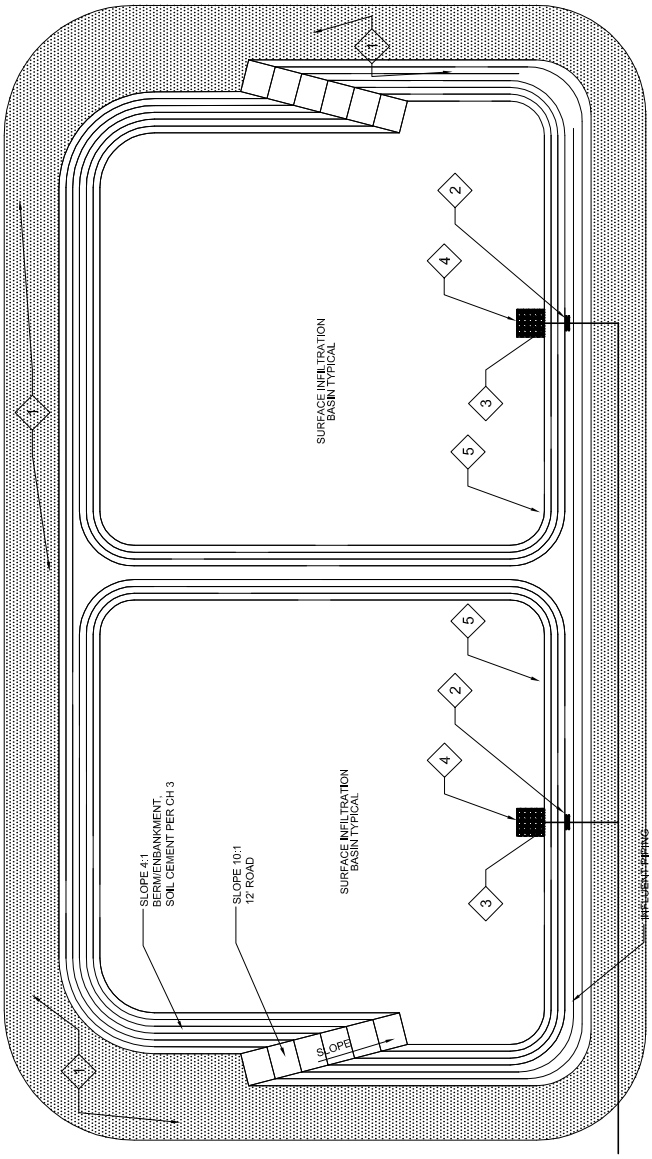

KEY NOTES:

1. INSTALL 6-Inch ABC ON ACCESS ROAD PER DET
2. INSTALL BUTTERFLY VALVE
3. INSTALL HEADWALL PER MAG DETAIL 501-4
4. INSTALL ENERGY DISSIPATER, WIDTH OF HEADWALL x10 FEET, 3 FEET EITHER SIDE, 3-FEET DEEP, 12-INCH COBBLE, GEOFABRIC LINED, NO GROUT, TYPICAL.
5. INSTALL STAFF GAUGE WITH LEVEL GRADUATIONS.

FINAL

REVISIONS	DWN	APVD	APVD	DATE

CITY OF SURPRISE

Maricopa County, Arizona

Water and Wastewater Guidelines

DESIGNED
DRAWN ARE
CHECKED
APPROVED
APPROVED
DATE APRIL 2011

SURPRISE
ARIZONA

SURFACE INFILTRATION BASIN CONCEPTUAL DESIGN

SCALE NTS

FIGURE	REV.
21.1	0

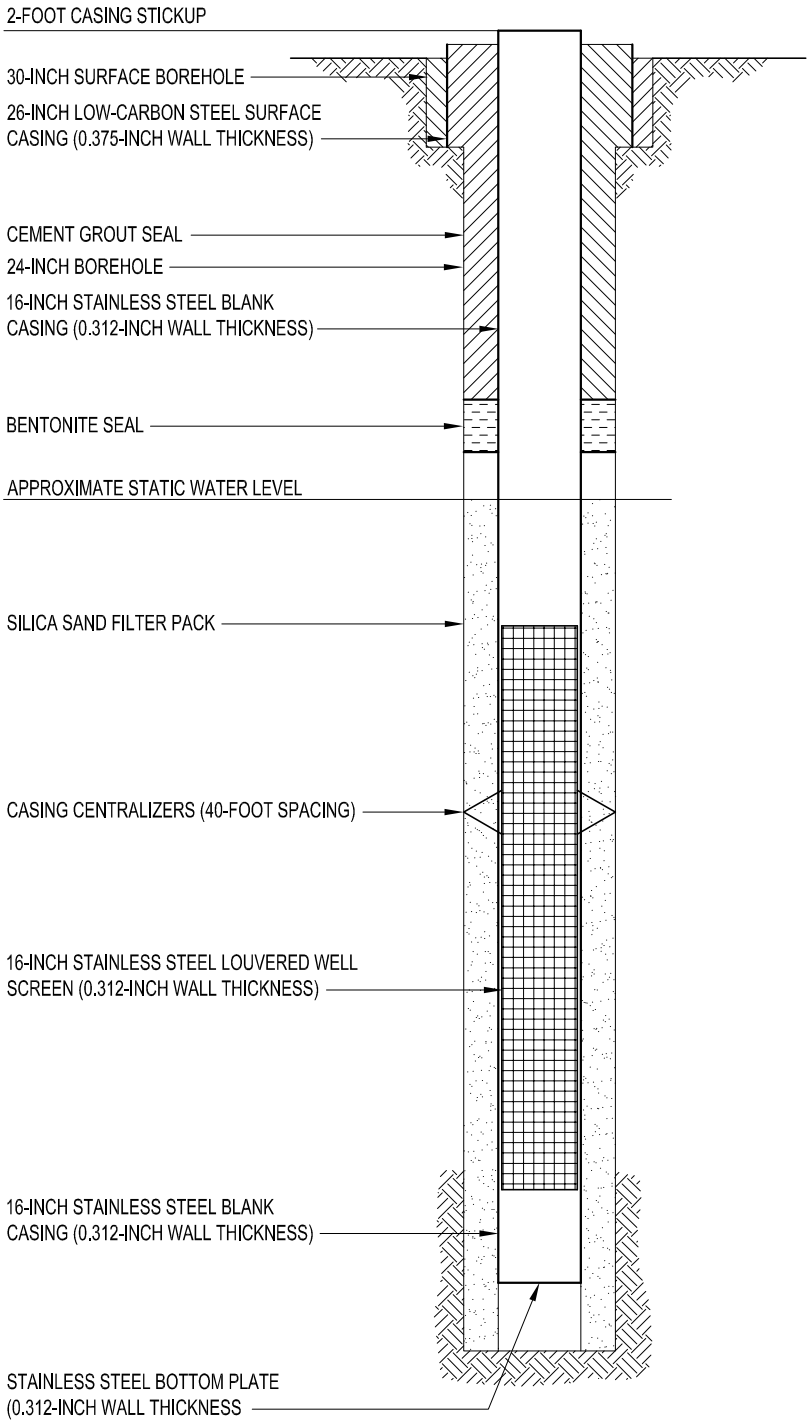

FINAL

REVISIONS	DWN	APVD	APVD	DATE

CITY OF SURPRISE

Maricopa County, Arizona

Water and Wastewater Guidelines

DESIGNED G.S.
DRAWN PAT
CHECKED
APPROVED
APPROVED
DATE APRIL 2011

SURPRISE
ARIZONA

ASR WELL FACILITY
BELOW GROUND
CONCEPTUAL WELL DESIGN

SCALE

FIGURE	REV.
21.2	0

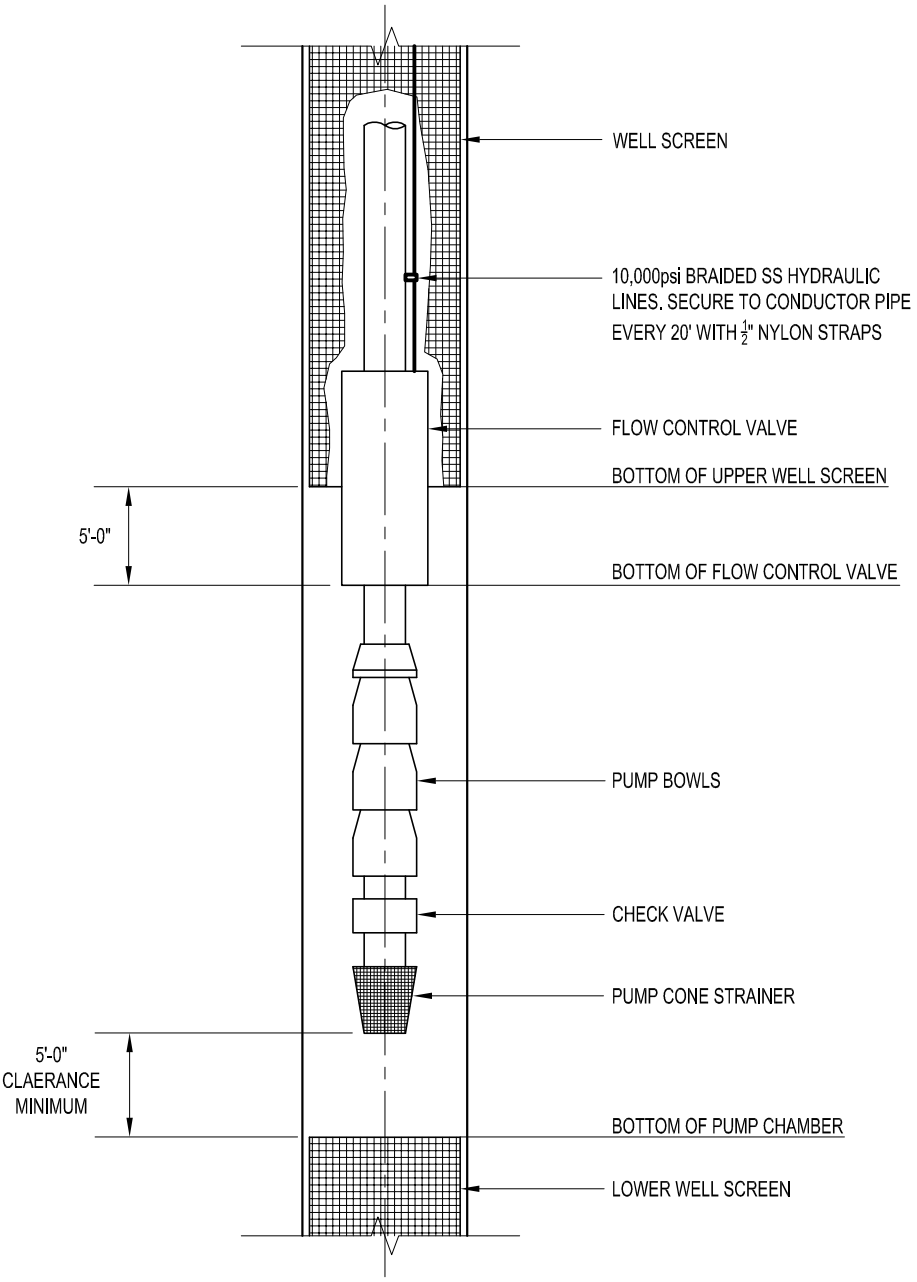

FINAL

REVISIONS	DWN	APVD	APVD	DATE

CITY OF SURPRISE

Maricopa County, Arizona

Water and Wastewater Guidelines

DESIGNED G.S.
DRAWN PAT
CHECKED
APPROVED
APPROVED
DATE APRIL 2011

SURPRISE ARIZONA

ASR WELL FACILITY CONCEPTUAL PUMP & FLOW CONTROL VALVE SETTING

SCALE

FIGURE	REV.
21.3	0

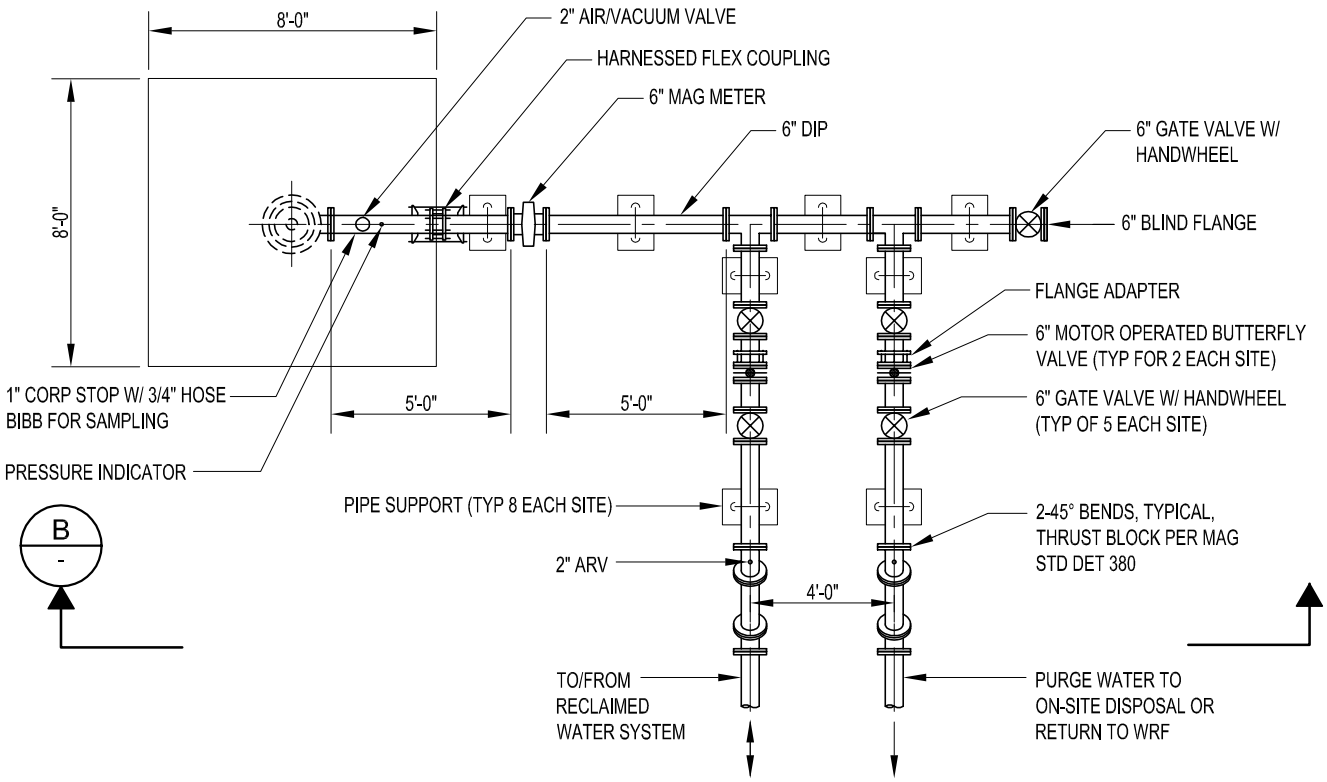

A PLAN
NTS

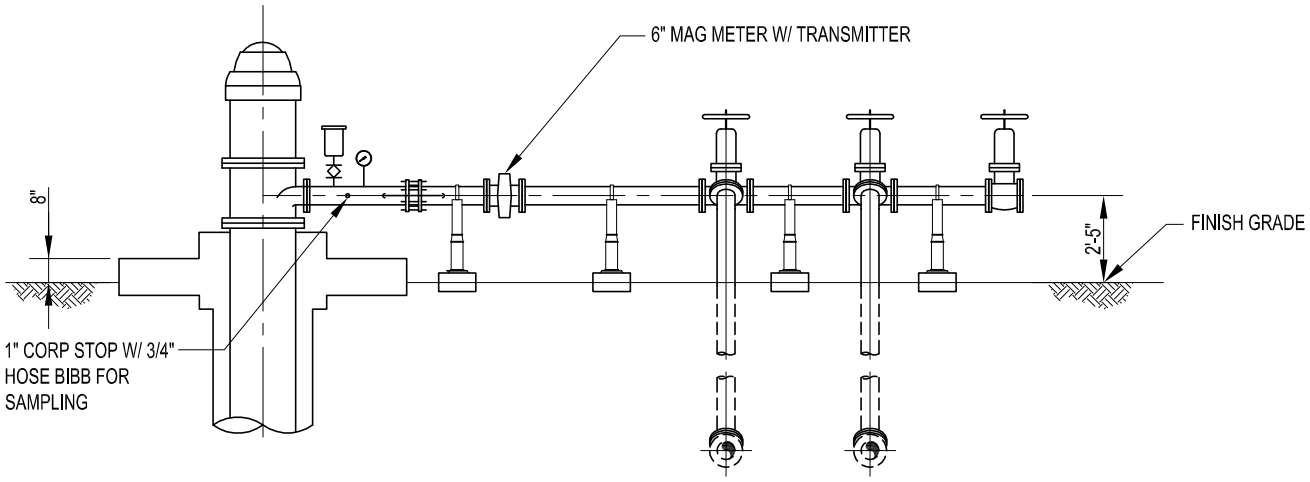

B - WELL PIPING SECTION
NTS

FINAL

REVISIONS	DWN	APVD	APVD	DATE

CITY OF SURPRISE

Maricopa County, Arizona

Water and Wastewater Guidelines

DESIGNED G.S.
DRAWN GD
CHECKED
APPROVED
APPROVED
DATE APRIL 2011

SURPRISE ARIZONA

ASR WELL FACILITIES CONCEPTUAL ABOVE GROUND COMPLETION

SCALE

FIGURE	REV.
21.4	0

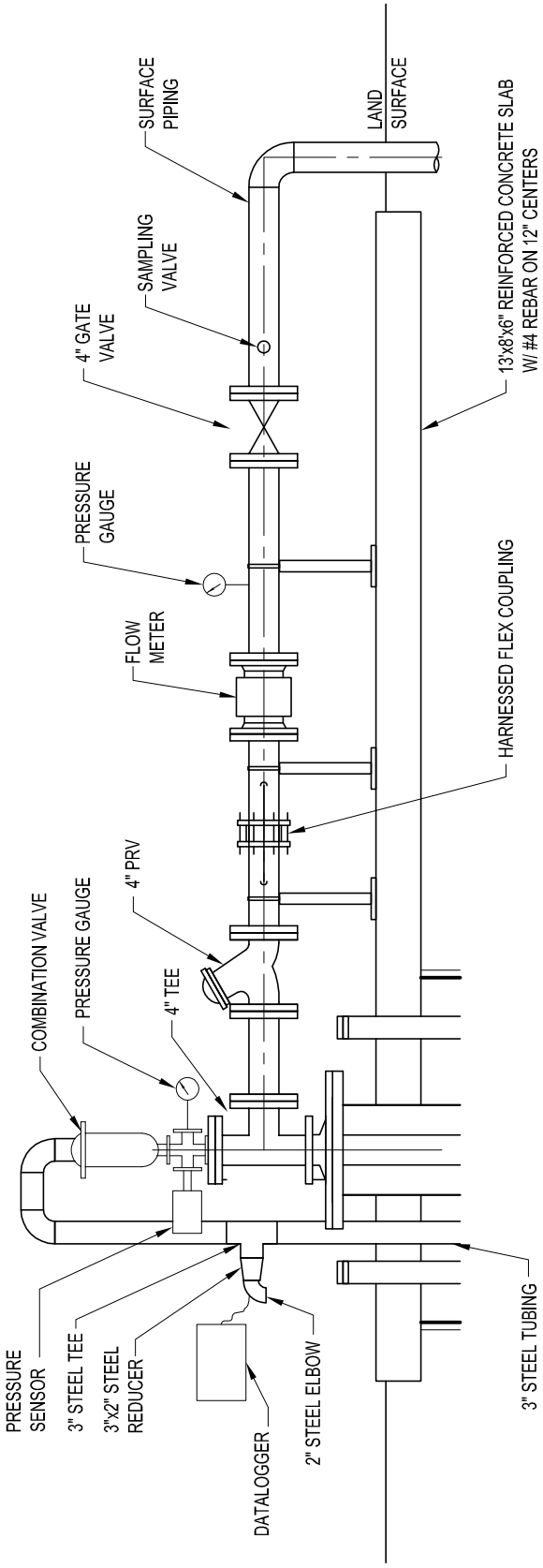

FINAL

REVISIONS	DWN	APVD	APVD	DATE

CITY OF SURPRISE

Maricopa County, Arizona

Water and Wastewater Guidelines

DESIGNED G.S.
DRAWN PAT
CHECKED
APPROVED
APPROVED
DATE APRIL 2011

SURPRISE ARIZONA

VADOSE ZONE WELL FACILITY CONCEPTUAL ABOVE GROUND COMPLETTION

SCALE

FIGURE	REV.
21.5	0

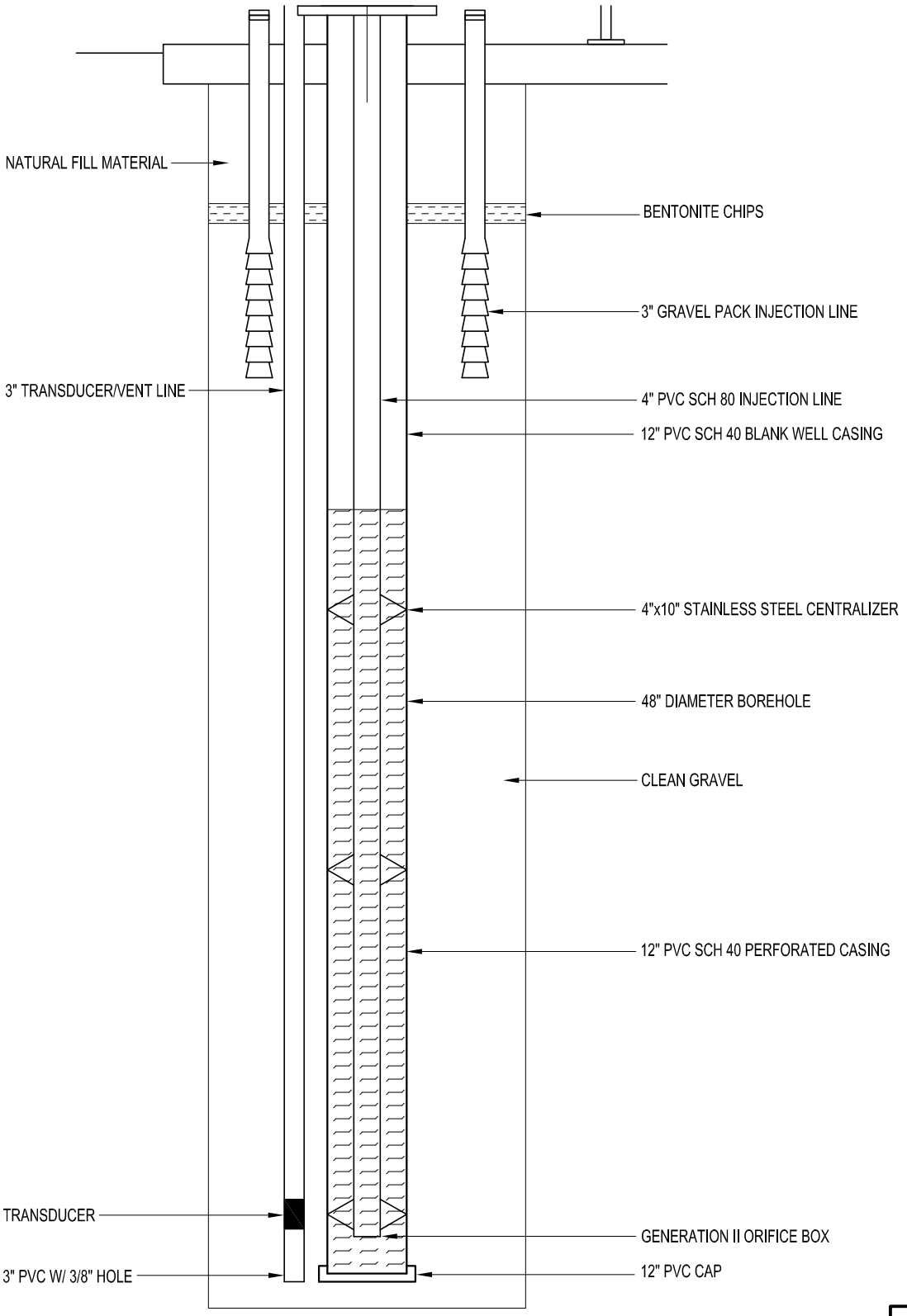

FINAL

REVISIONS	DWN	APVD	APVD	DATE

CITY OF SURPRISE

Maricopa County, Arizona

Water and Wastewater Guidelines

DESIGNED G.S.
DRAWN PAT
CHECKED
APPROVED
APPROVED
DATE APRIL 2011

SURPRISE
ARIZONA

VADOSE ZONE WELL FACILITY CONCEPTUAL BELOW GROUND COMPLETTION

SCALE

FIGURE	REV.
21.6	0

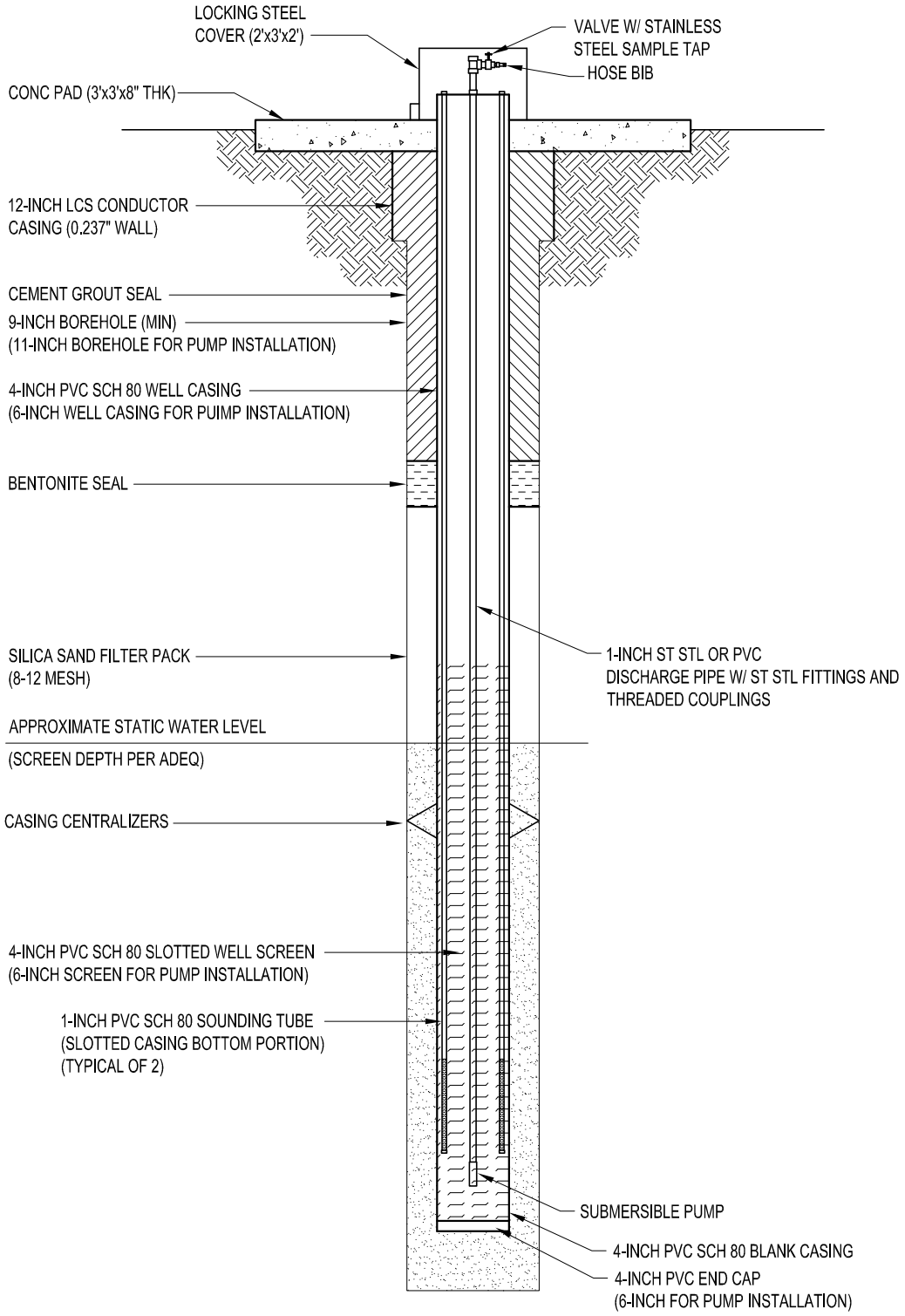

FINAL

REVISIONS	DWN	APVD	APVD	DATE

CITY OF SURPRISE

Maricopa County, Arizona

Water and Wastewater Guidelines

DESIGNED G.S.
DRAWN PAT
CHECKED
APPROVED
APPROVED
DATE APRIL 2011

SURPRISE
ARIZONA

TYPICAL
MONITORING WELL DESIGN

SCALE

FIGURE	REV.
21.7	0

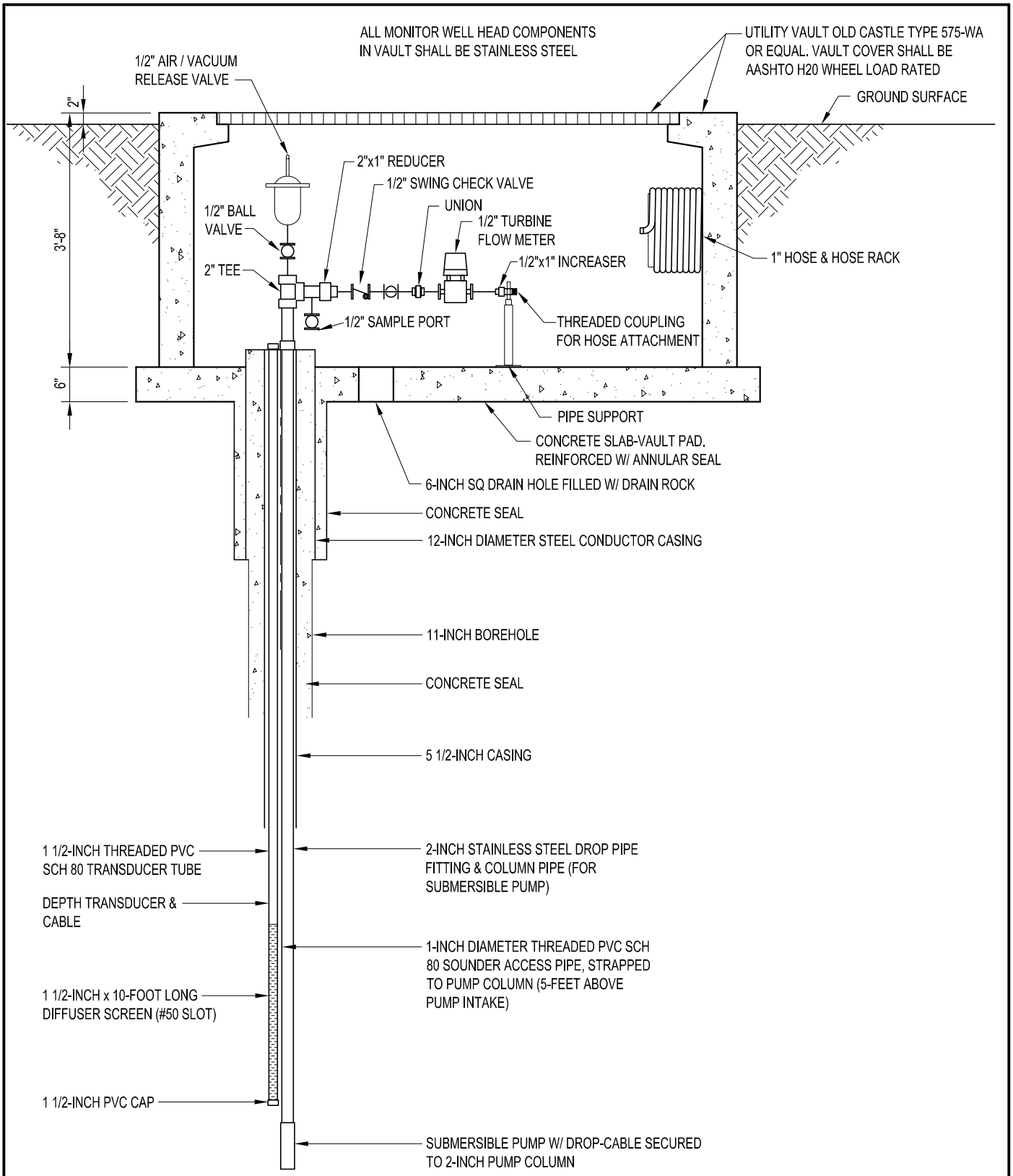

FINAL

REVISIONS	DWN	APVD	APVD	DATE

CITY OF SURPRISE

Maricopa County, Arizona

Water and Wastewater Guidelines

DESIGNED G.S.
DRAWN PAT
CHECKED
APPROVED
APPROVED
DATE APRIL 2011

SURPRISE ARIZONA

MONITORING WELL–WELLHEAD COMPLETION & EQUIPPING

SCALE

FIGURE	REV.
21.8	0

Appendix D

TECHNICAL SPECIFICATIONS FOR TYPICAL MONITORING WELL

APPENDIX D

TECHNICAL SPECIFICATIONS FOR TYPICAL MONITORING WELL

1.0 METHOD OF DRILLING

The Contractor shall be an Arizona licensed well driller and furnish all labor, equipment, materials, and services for the performance of all work required for the construction of this project. The well will be drilled using the reverse (air or water) rotary method. The drilling method is subject to the approval of the Hydrologist.

2.0 BOREHOLE CONSTRUCTION

2.1 Conductor Borehole Drilling

The conductor borehole shall be drilled to a nominal 16 inches in diameter and to a depth of 20 feet below land surface. The conductor borehole will be used for a surface seal to protect the completed well from surface contamination.

2.2 Installation of Conductor Casing

The conductor casing shall be new low-carbon steel, free from pits or breaks, and manufactured in accordance with American Society for Testing and Materials (ASTM) Standard Specification A53 Grade B. The casing shall be a nominal 12-inch with a 0.250-inch wall thickness. The conductor casing shall be equipped with two centralizers equally spaced circumferentially on the outside (near the bottom only) to ensure centering of the conductor casing in the borehole. The centralizers shall be fabricated of the same material as the conductor casing. The conductor casing must be installed prior to the start of the borehole construction (if applicable based on drilling method and ADWR variance).

2.3 Cement Grout Surface Seal

The cement grout surface seal material shall be placed completely within the annular space between the conductor casing and the borehole wall. The casing shall protrude from the upper portion of the borehole one foot above land surface. The cement grout shall be tremied into the annular space to meet the minimum surface seal requirements (Article 8, R12-15-811). The cement grout seal shall be placed in one continuous operation to form a continuous surface seal.

The neat cement shall consist of a cement slurry containing 5.2 to 6.0 gallons of water per 94-pound sack of portland cement. The portland cement shall conform to ASTM Standard C150, Type II. The cement grout slurry shall not exceed 15.6 lb/gal and shall be free of lumps, to the satisfaction of the Hydrologist. Water used for preparing the cement grout shall be potable. The neat cement grout slurry may contain pozzolanic material (fly ash)

as an additive, which complies with ASTM Standard C618, and which shall not exceed 50 percent by volume of the cement. No non-pozzolanic aggregate, sand, or accelerator additives may be added unless approved by the Hydrologist.

The Contractor must provide a cement mix design, the mix water source, and the specific constituents of the cement grout to the Hydrologist for approval prior to the installation of the cement grout. The Contractor shall make, collect, and preserve a representative one-pint sample of the cement grout. Cement grout that does not comply with the above requirements as determined by the Hydrologist will be rejected.

2.4 Borehole Drilling

The borehole shall be drilled to a nominal 11-inch diameter to the project specified depth. The borehole shall be sufficiently plumb to allow for the setting and operating of a submersible pump. The actual depth of the borehole will be determined using a combination of information derived from and including cutting samples and the geophysical logging. When the borehole reaches the depth specified by the Hydrologist, geophysical logging will be performed. The Hydrologist will finalize the well design and provide a copy of the design to the Contractor within 24 hours of the completion of the geophysical logging.

2.5 Cutting Samples

The Contractor shall collect and preserve for the Hydrologist, one set of cutting samples collected at each 5-foot depth interval from the ground surface to the bottom of the borehole. The samples shall be placed in cloth sacks furnished by the Contractor, which shall be marked by the Contractor with the well identification and the depth represented. In addition, as an onsite visual record of the borehole stratigraphy, a sample for each interval shall be laid out in descending order in the specified sample storage area on a waterproof tarp or ground cloth. The storage area and ground cloth must allow samples to be maintained in sequence, unmixed with surface material or other samples, until such time as they have been examined and logged by the Hydrologist. The Consultant shall collect and provide chip trays to the City.

2.6 Geophysical Logging

The Contractor shall arrange and provide geophysical logging of the borehole after the completion of drilling. Geophysical logging services shall be performed by a local contractor selected by the Hydrologist. The geophysical data shall be provided in ASCII digital format as well as five hard copies of the geophysical log. A suite of geophysical logs shall be collected, including electrical resistivity, spontaneous potential, caliper, and natural gamma logging.

Under the observation of the Hydrologist and/or the City, the geophysical logs shall be performed at the completion of the drilling of the borehole. The Contractor shall provide the logs to the Hydrologist, who will have 24 hours to view the logs and make a decision regarding the preliminary well design. The Hydrologist shall provide recommendations for the design to the City for review and approval.

3.0 WELL CONSTRUCTION

3.1 Installation of Well Casing

The monitor well shall be cased from approximately 1 foot above the ground surface to within 1 foot of the bottom of the open borehole, with the casing and perforated intervals set at depths specified by the Hydrologist. Casing centralizers shall be fabricated from stainless steel and attached to the lower portion of the perforated casing. The casing shall be held in place throughout the installation of the gravel pack. The bottom of the casing shall be capped with the same thickness and type of material as the casing. The well casing shall be Schedule 80 PVC having a nominal 5-inch diameter. A 10-foot piece of blank well casing and a PVC end-cap shall be added to the bottom of the perforated casing.

3.2 Perforated Intervals

The perforated intervals will be determined by the Hydrologist from the information obtained from the borehole. The perforated casing will have a nominal 5-inch diameter, and be composed of Schedule 80 PVC. The slot size shall be determined by the Hydrologist.

3.3 Installation of Gravel Pack

The gravel pack shall be installed with a tremie pipe from the land surface at a moderately slow rate from the “Super Sacks” of gravel. The technique for placing of the gravel must be a continuous routine of adding enough gravel to fill up the space between the borehole wall and the PVC well casing. Placement of the gravel shall be continuous, except when additional precautions are necessary to prevent bridging.

The gravel pack for the well shall consist of clean, well-rounded grains that are smooth and uniform. The gravel pack material shall be of siliceous composition, and shall be obtained from a source approved by the Hydrologist before start of construction. The gravel pack shall consist of hard, rounded particles with an average specific gravity of not less than 2.5 grams per cubic centimeter. Not more than one percent, by weight, of the material should have a specific gravity of 2.25 or less. The gravel shall contain no more than 2 percent, by weight, of thin, flat, or elongated pieces (pieces in which the largest dimension exceeds three times the smallest dimension) determined by hand-packing.

The gravel shall be free of shale, mica, clay, sand, dirt, loam, and organic impurities of any kind and shall contain no iron or manganese in any form or quantity that will adversely affect the water quality. The Hydrologist will determine the gravel pack grain size.

Samples of the gravel material, including sieve analysis, shall be submitted to the Hydrologist by the Contractor for approval prior to the gravel being delivered to the site. A suitable storage area for the gravel pack should be provided by the Contractor, and must be approved by the Hydrologist. To minimize contamination, the gravel pack shall be delivered to the property directly from the supplier. Gravel material shall be contained and temporarily stored onsite in such a manner that will prevent contamination of the material prior to installation. The Hydrologist shall determine the gravel pack placement depth.

3.4 Bentonite Pellets/Chips

The Contractor shall place a 10-foot thick layer of bentonite pellets/chips on top of the gravel pack to prevent the cement grout from migrating downward into the gravel pack. The bentonite pellets/chips shall be composed of high-swelling sodium montmorillonite clay. The bentonite pellets/chips shall be no larger than 3/4-inch diameter.

3.5 Bentonite Grout Slurry

The Contractor shall install a high solids bentonite grout slurry in the annular space between the well casing and the borehole wall. The bentonite grout slurry shall be placed with a tremie pipe in an operation that allows for sections of the tremie pipe to be removed as the bentonite grout slurry is placed within the borehole. The bentonite grout slurry shall be placed on top of the bentonite pellets/chips.

3.6 Neat Cement Grout

The Contractor shall place neat cement grout from the top of the bentonite grout slurry to within one foot of the land surface to completely seal the annular space between the 5-inch PVC casing and the borehole wall. The neat cement grout shall be placed through a tremie pipe.

The neat cement shall consist of a cement slurry containing 5.2 to 6.0 gallons of water per 94-pound sack of portland cement. The portland cement shall conform to ASTM Standard C150, Type II. The cement grout slurry shall not exceed 15.6 lb/gal and shall be free of lumps, to the satisfaction of the Hydrologist. Water used for preparing the cement grout shall be potable. The next cement grout slurry may contain pozzolanic material (fly ask) as an additive, which complies with ASTM Standard C618, and which shall not exceed 50 percent by volume of the cement. No non-pozzolanic aggregate, sand, or accelerator additives may be added unless approved by the Hydrologist.

3.7 Well Development & Chlorination

Well development for the well shall be accomplished by airlifting or by airlifting and swabbing for a period of 8 hours. If the air lifting and swabbing development method is used, the development tool shall be positioned at one level for not less than 5 minutes and then shall be moved to the next level, which shall be no more than 2 feet vertically from the preceding air lifting level. Development shall proceed from the bottom of the slotted casing to the top. The method of development must not cause excessive stress on the well casing so as to result in any damage or distortion of the casing. The specific method of development is subject to the approval of the Hydrologist. Any material accumulated in the well as a result of the well development must be removed by the Contractor.

At the end of well development, the Contractor shall disinfect the well using NSF 61 approved chlorine by slowly pouring 10 pounds of a dry-granulated calcium hypochlorite (65% available chlorine) from the surface into the center of the well casing.

3.8 Submersible Pump and Accessories

The Contractor shall provide and install a dedicated submersible pump, submersible pump motor, control box, electric cable, column pipe, sounding and transducer tubes, centralizer, and well seal.

Submersible Pump: The Contractor shall provide the materials and labor for complete installation of a 1.5 horsepower submersible pump. The pump should be capable of discharging groundwater from 5 to 10 gpm. The pump shall be set at a depth as determined by the Hydrologist.

The column pipe shall consist of a 1-inch threaded PVC with galvanized steel couplings and equipped with a 1/8-inch stainless steel safety cable attached to the pump and bottom of the well seal. Before placing the pump in the well, the Contractor shall remove the check valve. Both of the sounding tubes shall be attached to the column pipe at 20-foot intervals with plastic wire ties. The pump column pipe, sounding tubes, and electric cable shall pass through the well seat at the top of the well. The Contractor shall make all electrical connections according to applicable codes.

The Contractor shall equip the well with a submersible pump suitable for the service conditions as manufactured by a supplier listed on the COS Preferred Equipment List. All principal components of the pump shall be constructed of Type 304 stainless steel. The outside diameter of the pump shall be less than 4 inches. The pump shall be equipped with a 1.5 horsepower pump motor suitable for 230 VAC/3Ph/60 Hz, with control box and triple jacketed submersible pump cable. A stainless steel centralizer shall be placed on the column pipe within one foot of the top of the pump to keep the pump from rubbing the well casing wall. The surface completion shall consist of 1-inch steel pipe that passes through the well seal. The column pipe will be threaded into a galvanized steel 1-inch tee fitting, with a threaded plug on top and a standard Type 304 stainless steel sample hose

bib attached to the other end. The sample tap shall have a standard hose bib end for flushing well with a tee upstream of the hose bib with a non-threaded sample tap for sample collection.

Sounding Tubes: The Contractor shall provide and install two sounding tubes in the well. The sounding tubes shall be flush threaded 1-1/4-inch PVC, Schedule 40 pipe, and shall be banded to the pump column pipe with plastic ties at intervals not greater than 20 feet. The sounding tubes will be used to monitor groundwater levels with a transducer and an electric sounder. The sounding tubes will extend from the top of the well seal to a depth specified by the Hydrologist.

Well Seal: The Contractor shall provide and install a sanitary well seal to the top of the 5-inch PVC casing at the well. The well seal will need to have a steel ring mounted to the bottom of the seal where the safety cable for the submersible pump is attached. The well seal shall have four holes to accommodate the two 1-1/4-inch PVC sounding tubes, 1-1/4-inch column pipe, and pump electric cable. All holes in the well seal shall be capped or sealed to prevent the entry of contaminants.

Standby Generator: The Contractor shall provide and install provisions for operating the submersible pump with a portable standby generator. At a minimum, standby generator power provisions shall include:

1. NEMA 4X, stainless steel panel with lugs for connecting to standby generator located adjacent to the well.
2. Conductor cables designed for full current.
3. Manual transfer switch designed in accordance with current National Electric Code that prevents inadvertent interconnection of normal and emergency sources of power. Transfer switch must break connection to utility power before making connection to standby generator power, as well as prevent damage to generator and equipment upon restoration of utility power.

3.9 Aquifer Test

Once the pumping equipment has been installed, the Contractor shall provide a portable generator to conduct a continuous rate pumping discharge test for 4 hours, at which time the City will collect a bacteria sample for analysis. Should the bacteria sample test positive, then the Contractor will be required to return to the site and re-pump the well until a negative bacteria sample has been obtained. The Contractor shall supply a discharge line with a measuring device that is capable of a range of flows from 5 to 10 gpm. The Contractor shall contain all water discharged onsite during the test as approved by the Hydrologist and the City. The Hydrologist is responsible for collecting and recording water level drawdown, discharge rate, pH, electrical conductivity, and temperature at 30-minute intervals during the 4-hour pumping period. The Hydrologist shall monitor recovery measurements from the well.

3.10 Well Completion

The Contractor shall provide a concrete pad and a steel locking box with a hydraulic assisted lid to protect the well from vandalism. The steel box shall be removable to allow easy access to the monitor well. The Contractor shall also stub up through the bottom of the pad two PVC electrical conduits. The location of the conduits within the pad shall be determined by the Contractor in the field. It is estimated that each conduit will be 3 feet long. One conduit is for the electric cable that will supply power to the submersible pump and shall have a 1-1/2-inch diameter. The other conduit will be for the system instrumentation and have a 1-inch diameter. The Contractor shall provide end caps for both conduits.